GREY **DENOTES REVISION AND/ OR ADDITION**

TABLE OF CONTENTS

DIVISION	SECTION TITLE	NUMBER OF PAGES
VOLUME 1		
DIVISION 00 – PROCUREMENT & CONTRACTING REQUIREMENTS		
00 00 00	COVER PAGE VOLUME 1	01
00 00 00	COVER PAGE VOLUME 2	01
00 01 10	TABLE OF CONTENTS	05
00 07 00	GENERAL CONDITIONS	TBI
00 10 11	PROJECT DIRECTORY	
00 21 13	INSTRUCTIONS TO BIDDERS	TBI
00 41 00	BID FORMS	TBI
DIVISION 01 – GENERAL REQUIREMENTS		
01 10 00	SUMMARY	06
01 21 00	ALLOWANCES	04
01 23 00	ALTERNATES	02
01 25 00	SUBSTITUTION PROCEDURES	04
01 25 01	CHANGE ORDER REQUEST (PROPOSAL)	01
01 25 10	CONTRACTOR'S REQUEST FOR INTERPRETATION	03
01 25 10.1	REQUEST FOR INTERPRETATION FORM	01
01 25 10.2	REQUEST FOR INTERPRETATION LOG	01
01 27 00	UNIT PRICES	03
01 31 00	PROJECT MANAGEMENT AND COORDINATION	05
01 32 00	CONSTRUCTION PROGRESS DOCUMENTATION	06
01 32 23	PHOTOGRAPHIC DOCUMENTATION	03
01 34 00	SUBMITTAL PROCEDURES	10
01 34 00.1	SUBMITTAL TRANSMITTAL FORM	01
01 34 00.2	SUBMITTAL TRANSMITTAL LOG	01
01 40 00	QUALITY REQUIREMENTS	04
01 42 00	REFERENCES	19
01 50 00	TEMPORARY FACILITIES AND CONTROLS	09
01 56 39	TEMPORARY TREE & PLANT PROTECTION	08
01 60 00	PRODUCT REQUIREMENTS	08
01 60 00.1	SUBSTITUTION REQUEST	02
01 73 20	INDOOR AIR QUALITY MANAGEMENT	08
01 74 19	CONSTRUCTION WASTE MANAGEMENT	05
01 77 00	CLOSEOUT PROCEDURES	04
01 78 23	OPERATION AND MAINTENANCE DATA	08
01 78 00	PROJECT RECORD DOCUMENTS	02
01 79 00	DEMONSTRATION AND TRAINING	05
01 81 13	SUSTAINABLE DESIGN REQUIREMENTS	12
01 91 13	GENERAL COMMISSIONING REQUIREMENTS	08
DIVISION 02 – EXISTING CONDITIONS		
02 41 13	SELECTIVE DEMOLITION	07
DIVISION 03 - CONCRETE		
03 10 00	CONCRETE FORMWORK	16
03 20 00	CONCRETE REINFORCEMENT AND EMBEDDED ASSEMBLIES	12
03 30 00	CAST-IN-PLACE CONCRETE	44
03 33 00	LANDSCAPE ARCHITECTURAL CONCRETE	18

03 35 00	CONCRETE FINISHING	03
03 45 00	PRECAST ARCHITECTURAL CONCRETE	11

DIVISION 04 – MASONRY

04 22 00	CONCRETE MASONRY UNITS	12

DIVISION 05 - METALS

05 12 00	STRUCTURAL STEEL	22
05 40 00	COLD-FORMED METAL FRAMING	06
05 52 00	STAINLESS STEEL RAILINGS	04
05 50 00	METAL FABRICATIONS (ARCHITECTURAL)	10
05 52 00	STAINLESS STEEL RAILINGS	05

DIVISION 06 - WOOD & PLASTICS

06 10 00	ROUGH CARPENTRY	06
06 18 00	GLUED-LAMINATED CONSTRUCTION	04
06 20 00	FINISH CARPENTRY	03
06 40 23	INTERIOR ARCHITECTURAL WOODWORK	11
06 61 16	SOLID POLYMER COUNTERTOPS	04

DIVISION 07 - THERMAL & MOISTURE PROTECTION

07 13 13	RUBBERIZED-ASPHALT SHEET WATERPROOFING	04
07 19 16	WATER-REPELLENT & GRAFFITI CONTROL COATING	04
07 21 00	THERMAL INSULATION	05
07 26 16	BELOW-GRADE VAPOR RETARDER	03
07 27 26	FLUID-APPLIED AIR & WATER BARRIER	08
07 42 00	PREFORMED WALL PANELS	07
07 52 00	PATCHING EXISTING ROOFING	02
07 54 19	THERMOPLASTIC ROOFING	07
07 62 00	FLASHINGS AND SHEET METALWORK	07
07 72 33	ROOF HATCH	03
07 92 00	JOINT SEALANTS	08
07 95 00	SEISMIC JOINT COVER ASSEMBLIES	05

DIVISION 08 - OPENINGS

08 11 13	STEEL DOORS AND FRAMES	06
08 12 15	KD STEEL DOOR FRAMES	03
08 14 13	STILE AND RAIL WOOD DOORS	03
08 14 16	FLUSH WOOD DOORS	05
08 31 16	ACCESS DOORS & PANELS	05
08 32 00	MULTI-PANEL SLIDING GLASS DOORS	05
08 33 23	OVERHEAD COILING DOOR	04
08 43 13	EXTERIOR GLASS ASSEMBLIES	12
08 55 13	ALUMINUM WINDOWS	05
08 60 00	ALUMINUM-FRAMED SKYLIGHT	10
08 62 15	TUBULAR SKYLIGHTS	04
08 71 00	DOOR HARDWARE	21
08 71 13	AUTOMATIC DOOR OPERATORS	08
08 80 00	GLAZING	11
08 91 19	EXTERIOR ALUMINUM WALL LOUVERS	05

DIVISION 9 – FINISHES

09 00 10	CLEANING EXISTING SURFACES	02
09 05 16	PREPARATION OF CONCRETE SLABS FOR FINISH FLOORING	01
09 22 16	NON-STRUCTURAL METAL FRAMING	08

09 22 26	CEILING AND SOFFIT SUSPENSION SYSTEMS	03
09 23 13	ACOUSTICAL PLASTER SYSTEMS	04
09 24 00	LATH AND PORTLAND CEMENT PLASTER	07
09 29 00	GYPSUM BOARD	06
09 31 00	CERAMIC TILE	06
09 61 05	WATER VAPOR EMISSION CONTROL	04
09 62 29	CORK TILE FLOORING	05
09 65 10	RESILIENT WALL BASE	03
09 65 16	LINOLEUM SHEET FLOORING	06
09 67 70	INTERIOR CONCRETE FLOOR SEALER	04
09 68 13	CARPET TILE	05
09 69 00	ACCESS FLOORING	06
09 72 20	PRESENTATION DRY ERASE WALL COVERING	03
09 80 00	ACOUSTIC INSULATION AND SEALANTS	05
09 83 16	ACOUSTIC PAINT	02
09 90 00	PAINTING	11
09 96 00	HIGH-PERFORMANCE COATINGS	10

DIVISION 10 - SPECIALTIES

10 11 23	TACKBOARDS	03
10 14 00	SIGNAGE	07
10 21 13	TOILET COMPARTMENTS AND SCREENS	04
10 28 00	TOILET ROOM ACCESSORIES	03
10 44 00	FIRE EXTINGUISHERS AND CABINETS	04
10 73 16	INSTALLING FLAGPOLE	02
10 99 00	BUILDING SPECIALTIES	02

DIVISION 11 - EQUIPMENT

11 31 00	APPLIANCES	02
11 51 16	LIBRARY BOOK DEPOSITORIES	03

DIVISION 12 – FURNISHINGS

12 24 00	WINDOW SHADES	07
12 48 16	FLOOR MATS	02
12 93 00	SITE FURNISHINGS	04
12 93 13	BICYCLE PARKING DEVICES	02
12 93 15	BICYCLE LOCKERS	03

DIVISION 13 - SPECIAL CONSTRUCTION

13 31 23	FABRIC CANOPY	04

DIVISIONS 14 – 20
NOT USED

REMAINDER OF PAGE LEFT BLANK

VOLUME 2

DIVISION 21 – FIRE PROTECTION

21 10 00	FIRE PROTECTION	21
21 22 10	FM 200 FIRE SUPPRESSION	14

DIVISION 22 - PLUMBING

22 05 00	BASIC MATERIALS & METHODS - PLUMBING	27
22 05 01	PLUMBING	06
22 07 00	PLUMBING INSULATION	09
22 21 13	PLUMBING PIPING, VALVES AND SPECIALTIES	22
22 40 00	PLUMBING FIXTURES	03

DIVISION 23 – HEATING, VENTILATING & AIR-CONDITIONING

23 05 00	BASIC HVAC MATERIALS & METHODS	24
23 05 04	MECHANICAL SITE UTILITIES	07
23 05 29	VIBRATION AND SEISMIC CONTROLS FOR HVAC PIPING AND EQUIPMENT	12
23 05 93	TESTING, ADJUSTING & BALANCING	12
23 07 00	HVAC INSULATION	15
23 09 00	INSTRUMENTATION AND CONTROL FOR BMS	14
23 09 02	VARIABLE FREQUENCY DRIVES (VFD)	06
23 21 13	HVAC PIPING, VALVES AND SPECIALTIES	23
23 23 00	REFRIGERANT PIPING SYSTEMS	04
23 31 13	AIR DISTRIBUTION	23
23 31 14	DUCT & COIL CLEANING	03
23 34 13	FANS AND VENTS	07
23 41 00	AIR FILTERS	04
23 74 13	PACKAGED HVAC UNITS	07
23 81 45	SPLIT HEAT PUMP UNITS	07
23 82 19	SMALL CABINET FAN COIL UNITS	08

DIVISIONS 24 – 25
NOT USED

DIVISION 26 - ELECTRICAL

26 01 90	SUPPORT MATERIALS AND METHODS	03
26 05 00	COMMON WORK RESULTS FOR ELECTRICAL	09
26 05 26	GROUNDING AND BONDING	04
26 05 33	RACEWAYS AND BOXES FOR ELECTRICAL SYSTEMS	06
26 05 36	CABLE TRAYS FOR ELECTRICAL SYSTEMS	02
26 05 48	VIBRATION AND SEISMIC CONTROLS FOR ELECTRICAL SYSTEMS	05
26 09 23	MODULAR DIMMING CONTROLS	08
26 09 37	PHOTOVOLTAIC SYSTEM	10
26 24 13	SWITCHBOARDS	05
26 24 16	PANELBOARDS	02
26 27 26	WIRING DEVICES	03
26 28 16	ENCLOSED SWITCHES AND CIRCUIT BREAKERS	02
26 33 23	CENTRAL BATTERY EQUIPMENT	06
26 50 00	LIGHTING	20
26 50 01	LIGHTING FIXTURES	66

DIVISION 27 - COMMUNICATIONS

27 00 00	COMMUNICATIONS	14
27 05 26	GROUNDING AND BONDING FOR COMMUNICATIONS SYSTEMS	06

27 11 16	COMMUNICATIONS CABINETS, RACKS, ENCLOSURES	04
27 40 00	AUDIO-VISUAL COMMUNICATIONS	46

DIVISIONS 28 – 30
NOT USED

DIVISION 31 – EARTHWORK

31 10 00	SITE CLEARING	03
31 20 00	EARTH MOVING	08

DIVISION 32 – EXTERIOR IMPROVEMENTS

32 12 16	HOT-MIX ASPHALT PAVING	04
32 12 17	RESIN PAVING	12
32 13 13	CONCRETE PAVING	05
32 13 16	DECORATIVE CONCRETE PAVEMENT	28
32 13 17	LITHOCRETE ARCHITECTURAL CONCRETE PAVING	18
32 13 73	CONCRETE PAVEMENT JOINT SEALANTS (CIVIL)	03
32 13 73	CONCRETE PAVING JOINT SEALANTS (LANDSCAPE)	06
32 14 43	INTERLOCKING CONCRETE PAVERS (PERMEABLE PAVING)	06
32 14 45	POROUS PAVING	12
32 84 00	PLANTING IRRIGATION	15
32 90 50	LANDSCAPE BOULDERS	04
32 92 00	TURF & GRASSES	10
32 93 00	PLANTS	30
32 94 46	STAINLESS STEEL TRELLIS SYSTEM	10

DIVISION 33 – UTILITIES

33 11 00	WATER UTILITY DISTRIBUTION PIPING	07
33 31 00	SANITARY UTILITY SEWERAGE PIPING	05
33 41 00	STORM UTILITY DRAINAGE PIPING	05

DIVISION 34 – 48
NOT USED

APPENDICES

APPENDIX A1 - GEOTECHNICAL REPORT	55 & 5
APPENDIX A2 – GEOTECHNICAL REPORT ADDENDUM	
APPENDIX B – LEED SCORECARD & SUMMARY	18
APPENDIX C – LIBRARY EQUIPMENT	37

END OF TABLE OF CONTENTS

SECTION 012500 - SUBSTITUTION PROCEDURES

PART 1 - GENERAL

1.1 RELATED DOCUMENTS

A. Drawings and general provisions of the Contract, including General and Supplementary Conditions and other Division 01 Specification Sections, apply to this Section.

1.2 SUMMARY

A. Section includes administrative and procedural requirements for substitutions.

B. Related Requirements:

1. Section 012100 "Allowances" for products selected under an allowance.
2. Section 012300 "Alternates" for products selected under an alternate.
3. Section 016000 "Product Requirements" for requirements for submitting comparable product submittals for products by listed manufacturers.

1.3 DEFINITIONS

A. Substitutions: Changes in products, materials, equipment, and methods of construction from those required by the Contract Documents and proposed by Contractor.

1.4 SUBMITTALS

A. Substitution Requests: Submit five copies of each request for consideration. Identify product or fabrication or installation method to be replaced. Include Specification Section number and title and Drawing numbers and titles.

1. Documentation: Show compliance with requirements for substitutions and the following, as applicable:

a. Statement indicating why specified product or fabrication or installation cannot be provided, if applicable.
b. Coordination information, including a list of changes or revisions needed to other parts of the Work and to construction performed by Owner and separate contractors, that will be necessary to accommodate proposed substitution.

c. Detailed comparison of significant qualities of proposed substitution with those of the Work specified. Include annotated copy of applicable Specification Section. Significant qualities may include attributes such as performance, weight, size, durability, visual effect, sustainable design characteristics, warranties, and specific features and requirements indicated. Indicate deviations, if any, from the Work specified.
d. Product Data, including drawings and descriptions of products and fabrication and installation procedures.
e. Samples, where applicable or requested.
f. Certificates and qualification data, where applicable or requested.
g. List of similar installations for completed projects with project names and addresses and names and addresses of architects and owners.
h. Material test reports from a qualified testing agency indicating and interpreting test results for compliance with requirements indicated.
i. Research reports evidencing compliance with building code in effect for Project, from ICC-ES
j. Detailed comparison of Contractor's construction schedule using proposed substitution with products specified for the Work, including effect on the overall Contract Time. If specified product or method of construction cannot be provided within the Contract Time, include letter from manufacturer, on manufacturer's letterhead, stating date of receipt of purchase order, lack of availability, or delays in delivery.
k. Cost information, including a proposal of change, if any, in the Contract Sum.
l. Contractor's certification that proposed substitution complies with requirements in the Contract Documents except as indicated in substitution request, is compatible with related materials, and is appropriate for applications indicated.
m. Contractor's waiver of rights to additional payment or time that may subsequently become necessary because of failure of proposed substitution to produce indicated results.

2. Architect's Action: If necessary, Architect will request additional information or documentation for evaluation within 15 days of receipt of a request for substitution. Architect will notify Contractor through Construction Manager of acceptance or rejection of proposed substitution within 30 days of receipt of request, or 15 days of receipt of additional information or documentation, whichever is later.

   a. Forms of Acceptance: Change Order, Construction Change Directive, or Architect's Supplemental Instructions for minor changes in the Work.

1.5 QUALITY ASSURANCE

A. Compatibility of Substitutions: Investigate and document compatibility of proposed substitution with related products and materials. Engage a qualified testing agency to perform compatibility tests recommended by manufacturers.

1.6 PROCEDURES

A. Coordination: Revise or adjust affected work as necessary to integrate work of the approved substitutions.

PART 2 - PRODUCTS

2.1 SUBSTITUTIONS

A. Except as otherwise noted and permitted by law, whenever in the Contract Documents any material or process is indicated or specified by two or fewer patents, proprietary names, brand names and/or manufacturers, such specification shall be deemed pursuant to Public Contract Code 3400 to be followed by the words "or approved equal".

B. Contractor shall have ten (10) Days after submission of the Bid to submit data substantiating substitution of “or equal” items. City, with the advice of the Design Consultant, will determine whether the proposed brand or item is equal in quality and utility to that specified in the Contract Documents, and its decision shall be final. City, Construction Manager or Design Consultant may require the submission of samples, formulae, and/or statements of physical properties for consideration in determining equality of the material or process in question. No proposal for an equal will be considered complete unless accompanied by complete information and descriptive data necessary to determine the equality of the offered equal.

C. If Contractor requests use of substitute material or process, it shall be incumbent upon Contractor to furnish sufficient evidence to support the claim of equality to the satisfaction of City, Construction Manager or Design Consultant.

D. If City accepts for use in the Project a substitute material or process which in the opinion of City, Construction Manager or Design Consultant is not the equal of that specified, a Change Order shall be issued issuing a credit to City for the difference in value.

Substitutions by Contractor that are incorporated into the Work without the prior review and Approval by City, Construction Manager or Design Consultant in accordance with the requirements of the Contract Documents shall be deemed to be Defective Work.

PART 3 - EXECUTION (Not Used)

END OF SECTION 012500

SECTION 012700 - UNIT PRICES

PART 1 - GENERAL

1.1 RELATED DOCUMENTS

A. Drawings, Addenda, General Conditions, Construction Contract and other Division 1 Specification Sections, apply to this Section.

1.2 SUMMARY

A. This Section includes administrative and procedural requirements for unit prices.

B. Related Sections include the following:

1. Division 1 Section "Allowances" for procedures for using unit prices to adjust quantity allowances.
2. Division 1 Section "Quality Requirements" for general testing and inspecting requirements.

1.3 DEFINITIONS

A. Unit price is an amount proposed by bidders, stated on the Bid Form, as a price per unit of measurement for materials or services added to or deducted from the Contract Sum by appropriate modification, if estimated quantities of Work required by the Contract Documents are increased or decreased.

1.4 PROCEDURES

A. Unit prices include all necessary material, plus cost for delivery, installation, insurance, applicable taxes, overhead, and profit.

B. Measurement and Payment: Refer to individual Specification Sections for work that requires establishment of unit prices. Methods of measurement and payment for unit prices are specified in those Sections.

C. List of Unit Prices: A list of unit prices is included at the end of this Section. Specification Sections referenced in the schedule contain requirements for materials described under each unit price.

PART 2 - PRODUCTS (Not Used)

PART 3 - EXECUTION

3.1 LIST OF UNIT PRICES

A. Unit Price 1: Removal of unsatisfactory soil and replacement with satisfactory soil material.

1. Description: Unsatisfactory soil excavation and disposal off site and replacement with satisfactory fill material or engineered fill from off site, as required, according to Section 312000 "Earth Moving."
2. Unit of Measurement: Cubic yard of soil excavated, disposed of or replaced, based on survey of volume removed.
3. Quantity Allowance: Coordinate unit price with allowance adjustment requirements in Section 012100 "Allowances."

B. Unit Price No. 2: Cutting and patching of concrete floor slabs.

1. Description: Cutting of new or existing concrete slabs up to 6 inches thick, removal and excavation as required, and subsequent backfill, compaction, and patching of concrete according to Section 017300 "Execution." not otherwise indicated in the Contract Documents.
2. Unit of Measurement: Square feet of concrete removed.

C. Unit Price No. 3: Miscellaneous and structural steel.

1. Description: Miscellaneous lintels and other supports not otherwise indicated in the Contract Documents, according to Section 051200 "Structural Steel Framing" and Section 055000 "Metal Fabrications."
2. Unit of Measurement: Cost in place of pounds of fabricated steel as indicated on itemized invoice of steel supplier and verified by Architect.

D. Unit Price No. 4: Cutting and patching of A.C. paving

1. Description: Cutting of new or existing A.C. paving up to 4 inches thick, removal and excavation as required, and subsequent backfill, compaction, and patching of concrete according to Section 017300 "Execution." not otherwise indicated in the Contract Documents.
2. Unit of Measurement: Square feet of A.C. removed.

E. Unit Price No. 5: Cutting and patching of resin pavement.

1. Description: Cutting of new or existing concrete slabs up to 4 inches thick, removal and excavation as required, and subsequent backfill, compaction, and patching of concrete according to Section 017300 "Execution." not otherwise indicated in the Contract Documents.
2. Unit of Measurement: Square feet of resin pavement removed.

F. Unit Price No. 6: Additional photovoltaic panels.

1. Description: Additional photovoltaic panels in according to Section 263100 "Photovoltaic Energy Equipment" not otherwise indicated in the Contract Documents.
2. Unit of Measurement: Kilowatt installed

END OF SECTION SM01270

SECTION 013200 - CONSTRUCTION PROGRESS DOCUMENTATION

PART 1 - GENERAL

1.1 RELATED DOCUMENTS

A. Drawings, Addenda, General Conditions, Construction Contract and other Division 1 Specification Sections, apply to this Section.

1.2 SUMMARY

A. This Section includes administrative and procedural requirements for documenting the progress of construction during performance of the Work, including the following:

1. Preliminary Construction Schedule.
2. Contractor's Construction Schedule.
3. Submittals Schedule.
4. Daily construction reports.
5. Material delivery schedule.
6. Field condition reports.
7. Special reports.
8. Construction photographs.

B. Related Sections include the following:
1. Division 1 Section "Quality Requirements."
2. Division 1 Section "Closeout Procedures."

1.3 QUALITY ASSURANCE

1. Discuss constraints, including [phasing, work stages and interim milestones
2. Review time required for review of submittals and resubmittals.
3. Review requirements for tests and inspections by independent testing and inspecting agencies.
4. Review time required for completion and startup procedures.
5. Review and finalize list of construction activities to be included in schedule.
6. Review submittal requirements and procedures.
7. Review procedures for updating schedule.

1.4 COORDINATION

A. Coordinate preparation and processing of schedules and reports with performance of construction activities and with scheduling and reporting of separate contractors.

B. Coordinate Contractor's Construction Schedule with the Schedule of Values, list of subcontracts, Submittals Schedule, progress reports, payment requests, and other required schedules and reports.

1. Secure time commitments for performing critical elements of the Work from parties involved.
2. Coordinate each construction activity in the network with other activities and schedule them in proper sequence.

PART 2 - PRODUCTS

2.1 CONTRACTOR'S CONSTRUCTION SCHEDULE, GENERAL

A. Time Frame: Extend schedule from date established for the Notice to Proceed to date of Final Completion

1. Contract completion date shall not be changed by submission of a schedule that shows an early completion date, unless specifically authorized by Change Order.

B. Activities: Treat each area as a separate numbered activity for each principal element of the Work. Comply with the following:
1. Procurement Activities: Include procurement process activities for long lead items and major items, requiring a cycle of more than 60 days, as separate activities in schedule. Procurement cycle activities include, but are not limited to, submittals, approvals, purchasing, fabrication, and delivery.

2. Submittal Review Time: Include review and resubmittal times indicated in the General Conditions "Submittal Procedures" in schedule. Coordinate submittal review times in Contractor's Construction Schedule with Submittals Schedule.
3. Substantial Completion: Indicate completion in advance of date established for Substantial Completion, and allow time for City's and Construction Manager's administrative procedures necessary for certification of Substantial Completion.

C. Constraints: Include constraints and work restrictions indicated in the Contract Documents and as follows in schedule, and show how the sequence of the Work is affected.

1. Phasing: Arrange list of activities on schedule by phase.
2. Products Ordered in Advance: Include a separate activity for each product and check delivery date. Delivery dates indicated stipulate the earliest possible delivery date.
3. City-Furnished Products: Include a separate activity for each product and include delivery date. Delivery dates indicated stipulate the earliest possible delivery date.
4. Work Restrictions: Show the effect of the following items on the schedule:

a. Coordination with existing construction.
b. Limitations of continued occupancies.
c. Uninterruptible services.
d. Use of premises restrictions.

5. Work Stages: Indicate important stages of construction for each major portion of the Work, including, but not limited to, the following:

a. Submittals.
b. Purchases.
c. Mockups.
d. Fabrication.
e. Sample testing.
f. Deliveries.
g. Installation.
h. Tests and inspections.
i. Adjusting.
j. Curing.
k. Startup and placement into final use and operation.

D. Milestones: Include milestones indicated in the Contract Documents in schedule, including, but not limited to, the Notice to Proceed, Substantial Completion, and Final Completion.

E. Contract Modifications: For each proposed contract modification and concurrent with its submission, prepare a time-impact analysis using fragnets to demonstrate the change order effect of the proposed change on the overall project schedule. No submittal is required if the changes do not impact the project schedule.

F. Computer Software: Prepare schedules using a program that has been developed specifically to manage construction schedules.

2.2 REPORTS

A. Daily Construction Reports: Prepare a daily construction report recording the following information concerning events at Site:

1. List of subcontractors at Site.
2. List of separate contractors at Site.
3. Approximate count of personnel at Site.
4. High and low temperatures and general weather conditions.
5. Accidents.
6. Meetings and significant decisions.
7. Unusual events (refer to special reports).
8. Stoppages, delays, shortages, and losses.
9. Meter readings and similar recordings.

10. Emergency procedures.
11. Orders and requests of authorities having jurisdiction.
12. Change Orders received and implemented.
13. Construction Change Directives received.
14. Services connected and disconnected.
15. Equipment or system tests and startups.
16. Partial Completions and occupancies.
17. Substantial Completions authorized.

2.3 SPECIAL REPORTS

A. General: Submit special reports directly to City within one day of an occurrence. Distribute copies of report to parties affected by the occurrence.

B. Reporting Unusual Events: When an event of an unusual and significant nature occurs at Site, whether or not related directly to the Work, prepare and submit a special report. List chain of events, persons participating, response by Contractor's personnel, evaluation of results or effects, and similar pertinent information. Advise City in advance when these events are known or predictable.

PART 3 - EXECUTION

3.1 CONTRACTOR'S CONSTRUCTION SCHEDULE

A. Contractor's Construction Schedule Updating: Update schedule to reflect actual construction progress and activities. Issue schedule at each regularly scheduled progress meeting.

1. Revise schedule immediately after each meeting or other activity where revisions have been recognized or made. Issue updated schedule concurrently with the report of each such meeting.
2. Include a report with updated schedule that indicates every change, including, but not limited to, changes in logic, durations, actual starts and finishes, and activity durations.
3. As the Work progresses, indicate Actual Completion percentage for each activity.

B. Distribution: Distribute copies of approved schedule to the Designer Construction Manager, City, separate contractors, testing and inspecting agencies, and other parties identified by Contractor with a need-to-know schedule responsibility.

1. Post copies in Contractor’s temporary field office.
2. When revisions are made, distribute updated schedules to the same parties and post in the same locations. Delete parties from distribution when they have completed their assigned portion of the Work and are no longer involved in performance of construction activities.

END OF SECTION SM01320

SECTION 01 32 33 - PHOTOGRAPHIC DOCUMENTATION

PART 1 - GENERAL

1.1 CONSTRUCTION VIDEOTAPE/PHOTOGRAPHS

A. Photographer: Engage a qualified photographer to take construction photographs.
B. Digital Photographs: Submit image files 4 days prior to application for payment. Use a digital camera with a minimum sensor resolution of 8 megapixels, in full color.
C. Preconstruction Photographs: Before commencement of demolition, take photographs of Project site and surrounding properties, including existing items to remain during construction, from different vantage points, as directed by City. Show existing conditions adjacent to property.
D. Periodic Construction Photographs: Take photographs at intervals occurring with the cutoff date associated with each Application for Payment. Select vantage points to show status of demolition and progress since last photographs were taken.
E. Preconstruction Video Recording: Before starting demolition record video recording of Project site and surrounding properties from different vantage points, as directed by the City. Provide the City with one copy of the videotape before construction commences.
F. Final Completion Construction Photographs: Take photographs after date of Substantial completion for submission as Project Record Documents.
G. Provide the City with a 5- by 7-inch color copy, and digital copy on CD or DVD, of all photographs and videotapes taken as specified in this Section.

END OF SECTION

THIS IS A NEW SECTION AND SUPERCEDES SECTION 01 32 23

SECTION SM01400 - QUALITY REQUIREMENTS

PART 1 - GENERAL

1.1 RELATED DOCUMENTS

A. Drawings, Addenda, General Conditions, Construction Contract and other Division 1 Specification Sections, apply to this Section.

1.2 SUMMARY

A. This Section includes administrative and procedural requirements for quality assurance and quality control.

B. Testing and inspecting services are required to verify compliance with requirements specified or indicated. These services do not relieve Contractor of responsibility for compliance with the Contract Document requirements.

1. Specific quality-control requirements for individual construction activities are specified in the Sections that specify those activities. Requirements in those Sections may also cover production of standard products.
2. Specified tests, inspections, and related actions do not limit Contractor's quality-control procedures that facilitate compliance with the Contract Document requirements.
3. Requirements for Contractor to provide quality-control services required by Architect, City**,** Construction Manager**,** or authorities having jurisdiction are not limited by provisions of this Section.

C. Related Sections include the following:

1. Division 1 Section "Allowances" for testing and inspecting allowances.
2. Division 1 Section "Construction Progress Documentation" for developing a schedule of required tests and inspections.
3. Division 1 Section "Cutting and Patching" for repair and restoration of construction disturbed by testing and inspecting activities.
4. Divisions 2 through 16 Sections for specific test and inspection requirements.

1.3 DEFINITIONS

A. Quality-Assurance Services: Activities, actions, and procedures performed before and during execution of the Work to guard against defects and deficiencies and ensure that proposed construction complies with requirements.

B. Quality-Control Services: Tests, inspections, procedures, and related actions during and after execution of the Work to evaluate that completed construction complies with

requirements. Services do not include contract enforcement activities performed by Construction Manager.

C. Mockups: Full-size, physical example assemblies to illustrate finishes and materials. Mockups are used to verify selections made under Sample submittals, to demonstrate aesthetic effects and, where indicated, qualities of materials and execution, and to review construction, coordination, testing, or operation; they are not Samples. Mockups establish the standard by which the Work will be judged.

D. Testing Agency: An entity engaged to perform specific tests, inspections, or both. Testing laboratory shall mean the same as testing agency.

1.4 QUALITY ASSURANCE

A. Mockups: Before installing portions of the Work requiring mockups, build mockups for each form of construction and finish required to comply with the following requirements, using materials indicated for the completed Work:

1. Build mockups in location and of size indicated or, if not indicated, as directed by the Construction Manager.
2. Demonstrate the proposed range of aesthetic effects and workmanship.
3. Obtain Architect and Construction Manager's approval of mockups before starting work, fabrication, or construction.
4. Maintain mockups during construction in an undisturbed condition as a standard for judging the completed Work.
5. Demolish and remove mockups when directed, unless otherwise indicated.

1.5 QUALITY CONTROL

A. City Responsibilities: Where quality-control services are indicated as City's responsibility, City will engage a qualified testing agency to perform these services.

1. City will furnish Contractor with names, addresses, and telephone numbers of testing agencies engaged and a description of the types of testing and inspecting they are engaged to perform.
2. Payment for these services will be made from testing and inspecting allowances, as authorized by Change Orders.
3. Costs for retesting and reinspecting construction that replaces or is necessitated by work that failed to comply with the Contract Documents will be charged to Contractor and the Contract Sum will be adjusted by Change Order.

B. Contractor Responsibilities: Unless otherwise indicated, provide quality-control services specified and required by authorities having jurisdiction.

1. Where services are indicated as Contractor's responsibility, engage a qualified testing agency to perform these quality-control services.

a. Contractor shall not employ the same entity engaged by City, unless agreed to in writing by City.

2. Notify testing agencies at least 24 hours in advance of time when Work that requires testing or inspecting will be performed.
3. Where quality-control services are indicated as Contractor's responsibility, submit a certified written report, in duplicate, of each quality-control service.
4. Testing and inspecting requested by Contractor and not required by the Contract Documents are Contractor's responsibility.
5. Submit additional copies of each written report directly to authorities having jurisdiction, when they so direct.

C. Manufacturer's Field Services: Where indicated, engage a factory-authorized service representative to inspect field-assembled components and equipment installation, including service connections. Report results in writing.

D. Retesting/Reinspecting: Regardless of whether original tests or inspections were Contractor's responsibility, provide quality-control services, including retesting and reinspecting, for construction that revised or replaced Work that failed to comply with requirements established by the Contract Documents.

E. Associated Services: Cooperate with agencies performing required tests, inspections, and similar quality-control services, and provide reasonable auxiliary services as requested. Notify agency sufficiently in advance of operations to permit assignment of personnel. Provide the following:

1. Access to the Work.
2. Incidental labor and facilities necessary to facilitate tests and inspections.
3. Adequate quantities of representative samples of materials that require testing and inspecting. Assist agency in obtaining samples.
4. Facilities for storage and field-curing of test samples.
5. Delivery of samples to testing agencies.
6. Preliminary design mix proposed for use for material mixes that require control by testing agency.
7. Security and protection for samples and for testing and inspecting equipment at Site.

F. Coordination: Coordinate sequence of activities to accommodate required quality-assurance and quality-control services with a minimum of delay and to avoid necessity of removing and replacing construction to accommodate testing and inspecting.

1. Schedule times for tests, inspections, obtaining samples, and similar activities.

G. Schedule of Tests and Inspections: Prepare a schedule of tests, inspections, and similar quality-control services required by the Contract Documents. Submit schedule within 30 days of date established for commencement of the Work.

1. Distribution: Distribute schedule to City, Construction Manager, testing agencies, and each party involved in performance of portions of the Work where tests and inspections are required.

PART 2 - PRODUCTS (Not Used)

PART 3 - EXECUTION

3.1 REPAIR AND PROTECTION

A. General: On completion of testing, inspecting, sample taking, and similar services, repair damaged construction and restore substrates and finishes.

1. Provide materials and comply with installation requirements specified in other Sections of these Specifications. Restore patched areas and extend restoration into adjoining areas in a manner that eliminates evidence of patching.

B. Protect construction exposed by or for quality-control service activities.

C. Repair and protection are Contractor's responsibility, regardless of the assignment of responsibility for quality-control services.

END OF SECTION SM01400

SECTION 015000 - TEMPORARY FACILITIES AND CONTROLS

PART 1 - GENERAL

1.1 RELATED DOCUMENTS

A. Drawings and general provisions of the Contract, including General and Supplementary Conditions and other Division 01 Specification Sections, apply to this Section.

1.2 SUMMARY

A. Section includes requirements for temporary utilities, support facilities, and security and protection facilities.

1.3 USE CHARGES

A. General: Installation and removal of and use charges for temporary facilities shall be included in the Contract Sum unless otherwise indicated. Allow other entities to use temporary services and facilities without cost, including, but not limited to, Owner's construction forces, Architect, testing agencies, and authorities having jurisdiction.

B. Water Service: Pay water-service use charges for water used by all entities for construction operations.
   a. Water service for construction activities to be metered.

C. Electric Power Service: Pay electric-power-service use charges for electricity used by all entities for construction operations.
   a. Electric service for construction activities to be metered.

1.4 INFORMATIONAL SUBMITTALS

A. Site Plan: Show temporary facilities, utility hookups, staging areas, and parking areas for construction personnel.

B. Erosion- and Sedimentation-Control Plan: Show compliance with requirements of EPA Construction General Permit or authorities having jurisdiction, whichever is more stringent.

C. Fire-Safety Program: Show compliance with requirements of NFPA 241 and authorities having jurisdiction. Indicate Contractor personnel responsible for management of fire-prevention program.

1.5 QUALITY ASSURANCE

A. Electric Service: Comply with NECA, NEMA, and UL standards and regulations for temporary electric service. Install service to comply with NFPA 70.

B. Tests and Inspections: Arrange for authorities having jurisdiction to test and inspect each temporary utility before use. Obtain required certifications and permits.

C. Accessible Temporary Egress: Comply with applicable provisions in the U.S. Architectural & Transportation Barriers Compliance Board's ADA-ABA Accessibility Guidelines

PART 2 - PRODUCTS

2.1 MATERIALS

A. Chain-Link Fencing: Minimum 2-inch (50-mm), 0.148-inch- (3.8-mm-) thick, galvanized-steel, chain-link fabric fencing; minimum 6 feet (1.8 m) high with galvanized-steel pipe posts; minimum 2-3/8-inch- (60-mm-) OD line posts and 2-7/8-inch- (73-mm-) OD corner and pull posts.
   a. Provide full height vision barrier fabric at chain link fence.

B. Portable Chain-Link Fencing: Minimum 2-inch (50-mm), 0.148-inch- (3.8-mm-) thick, galvanized-steel, chain-link fabric fencing; minimum 6 feet (1.8 m) high with galvanized-steel pipe posts; minimum 2-3/8-inch- (60-mm-) OD line posts and 2-7/8-inch- (73-mm-) OD corner and pull posts, with 1-5/8-inch- (42-mm-) OD top and bottom rails. Provide galvanized-steel bases for supporting posts.
   a. Provide full height vision barrier fabric at chain link fence.

C. Polyethylene Sheet: Reinforced, fire-resistive sheet, 10-mil (0.25-mm) minimum thickness, with flame-spread rating of 15 or less per ASTM E 84 and passing NFPA 701 Test Method 2.

D. Wood Enclosure Fence: Plywood, [6 feet (1.8 m)] high, framed with four 2-by-4-inch (50-by-100-mm) rails, with preservative-treated wood posts spaced not more than 8 feet (2.4 m) apart.

2.2 TEMPORARY FACILITIES

A. Field Offices, General: Prefabricated or mobile units with serviceable finishes, temperature controls, and foundations adequate for normal loading.

B. Common-Use Field Office: Of sufficient size to accommodate needs of Owner, Architect, Construction Manager, and construction personnel office activities and to accommodate Project meetings specified in other Division 01 Sections. Keep office clean and orderly. The CONTRACTOR shall provide the following furniture on the date of availability for ENGINEER occupancy, no later than 30 calendar days after issuance of the Notice To Proceed. The Job Office and furniture shall be in good and clean

condition at the time of delivery and subject to the approval of the ENGINEER. CONTRACTOR will provide furnishings in the following quantities, to be set in rooms and position as directed by the ENGINEER upon delivery:

1. Four (4) rolling mid-back task chairs with arms, HON2090 or approved equal.
2. Four (4) double pedestal desks, 29x60x30, HON 10600 Series or approved equal.
3. One (1) metal bookcase, five shelf, HON 1870 Series or approved equal. Black.
4. Two (2) folding banquet tables, 29½"Hx30"Wx60"L
5. Ten (10) padded meeting chairs, Global or equal.
6. One (1) 42" wide two (2) drawer, legal size lateral file. HON 600 series or approved equal. Black.
7. One (1) 42" wide five (5) drawer, legal size lateral files. HON 600 series or approved equal. Black.
8. One (1) plan table.
9. Provide and install two (2) "Plan-Hold" wall-mounted 42 "wide plan racks with 24 individual plan holders (12 each rack).
10. Provide and install Two (2) 4' x 8' white boards as directed by ENGINEER, 48"x72" (Staples Cat.# 789834);
11. Conference room of sufficient size to accommodate meetings of 10 individuals. Provide electrical power service and 120-V ac duplex receptacles, with no fewer than one receptacle on each wall.
12. Drinking water.
13. Coffee machine and supplies.
14. Heating and cooling equipment necessary to maintain a uniform indoor temperature of 68 to 72 deg F (20 to 22 deg C).
15. Lighting fixtures capable of maintaining average illumination of 20 fc (215 lx) at desk height.
16. CONTRACTOR shall maintain and replenish ENGINEER'S job site office to maintain all components and equipment in proper working order throughout the duration of the Contract. This includes, but is not limited to, providing janitorial service for the weekly cleaning of ENGINEER'S job office, maintenance agreements covering all equipment provided under this Section and replenishment of supplies required under this section.

C. Storage and Fabrication Sheds: Provide sheds sized, furnished, and equipped to accommodate materials and equipment for construction operations.

1. Store combustible materials apart from building.

2.3 EQUIPMENT

A. Fire Extinguishers: Portable, UL rated; with class and extinguishing agent as required by locations and classes of fire exposures.

PART 3 - EXECUTION

3.1 INSTALLATION, GENERAL

A. Locate facilities where they will serve Project adequately and result in minimum interference with performance of the Work. Relocate and modify facilities as required by progress of the Work.

B. Provide each facility ready for use when needed to avoid delay. Do not remove until facilities are no longer needed or are replaced by authorized use of completed permanent facilities.

3.2 TEMPORARY UTILITY INSTALLATION

A. General: Install temporary service or connect to existing service.

1. Arrange with utility company, Owner, and existing users for time when service can be interrupted, if necessary, to make connections for temporary services.

B. Water Service: Install water service and distribution piping in sizes and pressures adequate for construction.

C. Sanitary Facilities: Provide temporary toilets, wash facilities, and drinking water for use of construction personnel. Comply with requirements of authorities having jurisdiction for type, number, location, operation, and maintenance of fixtures and facilities.

D. Isolation of Work Areas in Occupied Facilities: Prevent dust, fumes, and odors from entering occupied areas.

1. Prior to commencing work, isolate the HVAC system in area where work is to be performed according to coordination drawings.

   a. Disconnect supply and return ductwork in work area from HVAC systems servicing occupied areas.
   b. Maintain negative air pressure within work area using HEPA-equipped air-filtration units, starting with commencement of temporary partition construction, and continuing until removal of temporary partitions is complete.

2. Maintain dust partitions during the Work. Use vacuum collection attachments on dust-producing equipment. Isolate limited work within occupied areas using portable dust-containment devices.
3. Perform daily construction cleanup and final cleanup using approved, HEPA-filter-equipped vacuum equipment.

E. Electric Power Service: Provide electric power service and distribution system of sufficient size, capacity, and power characteristics required for construction operations.

1. Install electric power service overhead unless otherwise indicated.

2. Connect temporary service to Owner's existing power source, as directed by Owner.

F. Lighting: Provide temporary lighting with local switching that provides adequate illumination for construction operations, observations, inspections, and traffic conditions.

1. Install and operate temporary lighting that fulfills security and protection requirements without operating entire system.
2. Install lighting for Project identification sign.

G. Telephone Service: Provide temporary telephone service in common-use facilities for use by all construction personnel. Install one telephone line for each field office.

1. Provide additional telephone lines for the following:

~~a. Provide a dedicated telephone line for each facsimile machine in each field office.~~
b. Provide one telephone line for Owner's use.

2. At each telephone, post a list of important telephone numbers.

a. Police and fire departments.
b. Ambulance service.
c. Contractor's home office.
d. Contractor's emergency after-hours telephone number.
e. Architect's office.
f. Engineers' offices.
g. Owner's office.
h. Principal subcontractors' field and home offices.

3. Provide superintendent with cellular telephone or portable two-way radio for use when away from field office.

3.3 SUPPORT FACILITIES INSTALLATION

A. General: Comply with the following:

1. Provide construction for temporary offices, shops, and sheds located within construction area or within 30 feet (9 m) of building lines that is noncombustible according to ASTM E 136. Comply with NFPA 241.
2. Maintain support facilities until Architect schedules Substantial Completion inspection. Remove before Substantial Completion. Personnel remaining after Substantial Completion will be permitted to use permanent facilities, under conditions acceptable to Owner.

B. Temporary Roads and Paved Areas: Construct and maintain temporary roads and paved areas adequate for construction operations. Locate temporary roads and paved areas as indicated on Drawings.

C. Traffic Controls: Comply with requirements of authorities having jurisdiction.

1. Protect existing site improvements to remain including curbs, pavement, and utilities.
2. Maintain access for fire-fighting equipment and access to fire hydrants.

D. Parking: Use designated areas of Owner's existing parking areas for construction personnel.

E. Dewatering Facilities and Drains: Comply with requirements of authorities having jurisdiction. Maintain Project site, excavations, and construction free of water.

1. Dispose of rainwater in a lawful manner that will not result in flooding Project or adjoining properties or endanger permanent Work or temporary facilities.

F. Project Signs: Provide Project signs as indicated. Unauthorized signs are not permitted.

1. Identification Signs: Provide Project identification signs as indicated on Drawings.
2. Temporary Signs: Provide other signs as indicated and as required to inform public and individuals seeking entrance to Project.

a. Provide temporary, directional signs for construction personnel and visitors.

3. Maintain and touchup signs so they are legible at all times.

G. Waste Disposal Facilities: Comply with requirements specified in Section 017419 "Construction Waste Management and Disposal."

H. Waste Disposal Facilities: Provide waste-collection containers in sizes adequate to handle waste from construction operations. Comply with requirements of authorities having jurisdiction. Comply with progress cleaning requirements in Section 017300 "Execution."

I. Lifts and Hoists: Provide facilities necessary for hoisting materials and personnel.

1. Truck cranes and similar devices used for hoisting materials are considered "tools and equipment" and not temporary facilities.

3.4 SECURITY AND PROTECTION FACILITIES INSTALLATION

A. Protection of Existing Facilities: Protect existing vegetation, equipment, structures, utilities, and other improvements at Project site and on adjacent properties, except those indicated to be removed or altered. Repair damage to existing facilities.

B. Environmental Protection: Provide protection, operate temporary facilities, and conduct construction as required to comply with environmental regulations and that minimize possible air, waterway, and subsoil contamination or pollution or other undesirable effects.

1. Comply with work restrictions specified in Section 011000 "Summary."

C. Temporary Erosion and Sedimentation Control: Comply with requirements of 2003 EPA Construction General Permit or authorities having jurisdiction, whichever is more stringent and requirements specified in Section 311000 "Site Clearing."

D. Temporary Erosion and Sedimentation Control: Provide measures to prevent soil erosion and discharge of soil-bearing water runoff and airborne dust to undisturbed areas and to adjacent properties and walkways, according to requirements of 2003 EPA Construction General Permit or authorities having jurisdiction, whichever is more stringent.

1. Verify that flows of water redirected from construction areas or generated by construction activity do not enter or cross tree- or plant- protection zones.
2. Inspect, repair, and maintain erosion- and sedimentation-control measures during construction until permanent vegetation has been established.
3. Clean, repair, and restore adjoining properties and roads affected by erosion and sedimentation from Project site during the course of Project.
4. Remove erosion and sedimentation controls and restore and stabilize areas disturbed during removal.

E. Stormwater Control: Comply with requirements of authorities having jurisdiction. Provide barriers in and around excavations and subgrade construction to prevent flooding by runoff of stormwater from heavy rains.

F. Tree and Plant Protection: Comply with requirements specified in Section 015639 "Temporary Tree and Plant Protection."

G. Tree and Plant Protection: Install temporary fencing located as indicated or outside the drip line of trees to protect vegetation from damage from construction operations. Protect tree root systems from damage, flooding, and erosion.

H. Pest Control: Engage pest-control service to recommend practices to minimize attraction and harboring of rodents, roaches, and other pests and to perform extermination and control procedures at regular intervals so Project will be free of pests and their residues at Substantial Completion. Perform control operations lawfully, using environmentally safe materials.

I. Site Enclosure Fence: Before construction operations begin, furnish and install site enclosure fence in a manner that will prevent people and animals from easily entering site except by entrance gates.

1. Extent of Fence: As indicated on Drawings.
2. Maintain security by limiting number of keys and restricting distribution to authorized personnel.

J. Security Enclosure and Lockup: Install temporary enclosure around partially completed areas of construction. Provide lockable entrances to prevent unauthorized entrance, vandalism, theft, and similar violations of security. Lock entrances at end of each work day.

K. Barricades, Warning Signs, and Lights: Comply with requirements of authorities having jurisdiction for erecting structurally adequate barricades, including warning signs and lighting.

L. Temporary Egress: Maintain temporary egress from existing occupied facilities as indicated and as required by authorities having jurisdiction.

M. Covered Walkway: Erect protective, covered walkway for passage of individuals through or adjacent to Project site. Coordinate with entrance gates, other facilities, and obstructions. Comply with regulations of authorities having jurisdiction.

1. Construct covered walkways using scaffold or shoring framing.
2. Provide overhead decking, protective enclosure walls, handrails, barricades, warning signs, exit signs, lights, safe and well-drained walkways, and similar provisions for protection and safe passage.
3. Paint and maintain appearance of walkway for duration of the Work.

N. Temporary Enclosures: Provide temporary enclosures for protection of construction, in progress and completed, from exposure, foul weather, other construction operations, and similar activities. Provide temporary weathertight enclosure for building exterior.

1. Where heating or cooling is needed and permanent enclosure is incomplete, insulate temporary enclosures.

3.5 MOISTURE AND MOLD CONTROL

A. Contractor's Moisture-Protection Plan: Avoid trapping water in finished work. Document visible signs of mold that may appear during construction.

B. Exposed Construction Phase: Before installation of weather barriers, when materials are subject to wetting and exposure and to airborne mold spores, protect as follows:

1. Protect porous materials from water damage.
2. Protect stored and installed material from flowing or standing water.
3. Keep porous and organic materials from coming into prolonged contact with concrete.
4. Remove standing water from decks.
5. Keep deck openings covered or dammed.

C. Partially Enclosed Construction Phase: After installation of weather barriers but before full enclosure and conditioning of building, when installed materials are still subject to infiltration of moisture and ambient mold spores, protect as follows:

1. Do not load or install drywall or other porous materials or components, or items with high organic content, into partially enclosed building.
2. Keep interior spaces reasonably clean and protected from water damage.
3. Periodically collect and remove waste containing cellulose or other organic matter.
4. Discard or replace water-damaged material.
5. Do not install material that is wet.

6. Discard, replace, or clean stored or installed material that begins to grow mold.
7. Perform work in a sequence that allows any wet materials adequate time to dry before enclosing the material in drywall or other interior finishes.

D. Controlled Construction Phase of Construction: After completing and sealing of the building enclosure but prior to the full operation of permanent HVAC systems, maintain as follows:

1. Control moisture and humidity inside building by maintaining effective dry-in conditions.
2. Use permanent HVAC system to control humidity.
3. Comply with manufacturer's written instructions for temperature, relative humidity, and exposure to water limits.

   a. Hygroscopic materials that may support mold growth, including wood and gypsum-based products, that become wet during the course of construction and remain wet for 48 hours are considered defective.
   b. Measure moisture content of materials that have been exposed to moisture during construction operations or after installation. Record readings beginning at time of exposure and continuing daily for 48 hours. Identify materials containing moisture levels higher than allowed. Report findings in writing to Architect.
   c. Remove materials that cannot be completely restored to their manufactured moisture level within 48 hours.

3.6 OPERATION, TERMINATION, AND REMOVAL

A. Supervision: Enforce strict discipline in use of temporary facilities. To minimize waste and abuse, limit availability of temporary facilities to essential and intended uses.

B. Maintenance: Maintain facilities in good operating condition until removal.

1. Maintain operation of temporary enclosures, heating, cooling, humidity control, ventilation, and similar facilities on a 24-hour basis where required to achieve indicated results and to avoid possibility of damage.

C. Temporary Facility Changeover: Do not change over from using temporary security and protection facilities to permanent facilities until Substantial Completion.

D. Termination and Removal: Remove each temporary facility when need for its service has ended, when it has been replaced by authorized use of a permanent facility, or no later than Substantial Completion. Complete or, if necessary, restore permanent construction that may have been delayed because of interference with temporary facility. Repair damaged Work, clean exposed surfaces, and replace construction that cannot be satisfactorily repaired.

1. Materials and facilities that constitute temporary facilities are property of Contractor. Owner reserves right to take possession of Project identification signs.

2. Remove temporary roads and paved areas not intended for or acceptable for integration into permanent construction. Where area is intended for landscape development, remove soil and aggregate fill that do not comply with requirements for fill or subsoil. Remove materials contaminated with road oil, asphalt and other petrochemical compounds, and other substances that might impair growth of plant materials or lawns. Repair or replace street paving, curbs, and sidewalks at temporary entrances, as required by authorities having jurisdiction.
3. At Substantial Completion, repair, renovate, and clean permanent facilities used during construction period. Comply with final cleaning requirements specified in Section 017700 "Closeout Procedures."

END OF SECTION 015000

SECTION 01 56 39 - TEMPORARY TREE AND PLANT PROTECTION

PART 1 - GENERAL

1.1 RELATED DOCUMENTS

A. Drawings and general provisions of the Contract, including General and Supplementary Conditions and Division 01 Specification Sections, apply to this Section.

1.2 SUMMARY

A. This Section includes the protection and trimming of existing trees that interfere with, or are affected by, execution of the Work, whether temporary or permanent construction.

B. Related Sections include the following:

1. Division 01 Section "Summary" for limits placed on Contractor's use of the site.

2. Division 01 Section "Temporary Facilities and Controls" for temporary tree protection.

3. Division 31 Section "Site Clearing" for removal limits of trees, shrubs, and other plantings affected by new construction.

4. Division 31 Section "Earth Moving" for building and utility trench excavation, backfilling, compacting and grading requirements, and soil materials.

5. Division 32 Section "Plants" for tree and shrub planting, tree support systems, and soil materials.

6. Division 32 Section "Planting Irrigation" for tree and shrub planting irrigation systems.

7. Section 01 81 13, “SUSTAINABLE DESIGN REQUIREMENTS”: LEED Requirements.

1.3 REFERENCES

A. US Green Building Council (USGBC), www.usgbc.org

1.4 DEFINITIONS

A. Tree Protection Zone: Area surrounding individual trees or groups of trees to remain during construction, and defined by the drip line of individual trees or the perimeter drip line of groups of trees, unless otherwise indicated.

1.5 SUBMITTALS

A. Product Data: For each type of product indicated.

B. Tree Pruning Schedule: Written schedule from arborist detailing scope and extent of pruning of trees to remain that interfere with or are affected by construction.

C. Qualification Data: For tree service firm and arborist.

D. Certification: From arborist, certifying that trees indicated to remain have been protected during construction according to recognized standards and that trees were promptly and properly treated and repaired when damaged.

E. Maintenance Recommendations: From arborist, for care and protection of trees affected by construction during and after completing the Work.

F. LEED certification product data as specified in Division 1, Section 01 81 13, “SUSTAINABLE DESIGN REQUIREMENTS”, for the following LEED credits:

1. Credit MR 4.1 & 4.2, Recycled Content

2. Credit MR 5.1 & 5.2, Regional Materials, Manufactured & Harvested / Extracted Locally

1.6 QUALITY ASSURANCE

A. Tree Service Firm Qualifications: A tree service firm that has successfully completed tree protection and trimming work similar to that required for this Project and that will assign a, qualified arborist to Project site during execution of tree protection and trimming.

B. Arborist Qualifications: An arborist certified by ISA or licensed in the jurisdiction where Project is located.

C. Tree Pruning Standard: Comply with ANSI A300 (Part 1), "Tree, Shrub, and Other Woody Plant Maintenance--Standard Practices (Pruning)."

D. Preinstallation Conference: Conduct conference at Project site to comply with requirements in Division 01 Section "Project Management and Coordination."

1. Prior to any construction activity conduct a meeting at Project site with the Design Consultant and Contractor to tag the trees to be protected.

~~1.~~2. Prior tree protection and trimming operations begin, meet with representatives of authorities having jurisdiction, ~~Owner,~~ Design Consultants, and other concerned entities to review tree protection and trimming procedures and responsibilities.~~]~~

~~1.7 GUARANTEE~~

~~A. If a tree to remain is destroyed or injured so that in the judgement of the Owner's Representative it should be replaced, it shall be removed at the expense of the Contractor. Contract shall pay compensation to the Owner of the property where the tree was located at the rate as specified herein this Section (see Compensation).~~

~~1.8 COMPENSATION~~

~~A. Contractor shall replace existing tree that died or sustained injury from the result of the Contractor's negligence to provide adequate required tree protection, pruning, irrigation or maintenance during the course of construction operations. Compensation shall be awarded to the Owner as follows:~~

~~1. Contractor shall thoroughly remove damaged tree, including trunk, branches, and roots, at no cost to the Owner, and at the direction of the Owner's Representative. Contractor shall furnish and install an equal size tree, up to a six inch (6") caliper size with a tree that is of the same form, species, shape, and in the same quantity as those tree(s) that were damaged, at the direction of the Owner's Representative.~~

~~2. Contractor shall provide an additional cash settlement to the Owner for each damaged tree, as evaluated by the Owner's Representative. Additional compensation shall be based on the following formula:~~

~~a. Tree caliper measurement of the damaged tree(s), where caliper is measured at the greatest trunk diameter 24" above the finished grade:~~

~~1) Tree Trunk Caliper Amount~~

~~a) Less than 6" none~~

~~b) 6" to 12" $9,000.00~~

~~c) >12"to18" $15,000.00~~

~~d) over 18", add for each caliper inch $1.000.00~~

~~B. Contractor shall replace vegetation (other than trees) that died or sustained injury from the result of the Contractor's negligence to provide adequate required vegetation protection, pruning, or maintenance during the course of construction operations, as evaluated by the Owner's Representative. Compensation shall be awarded to the Owner as follows:~~

~~1. Contractor shall thoroughly remove damaged vegetation at no cost to the Owner, and at the direction of the Owner's Representative.~~

~~2. Contractor shall furnish and install per requirements in Section 329300 "Plants", with five gallon container stock minimum (as applicable) of the same form, species, and in the same quantity as vegetation that was damaged, at the direction of the Owner's Representative.~~

1.7 ~~The Owner's Representative shall make the final judgement on whether trees and/or vegetation have been damaged by the Contractor during the execution of the Work, and their decision is final.~~

~~C.~~A.

PART 2 - PRODUCTS

2.1 MATERIALS

A. Drainage Fill: Selected crushed stone, or crushed or uncrushed gravel, washed, ASTM D 448, Size 24, with 90 to 100 percent passing a 2-1/2-inch sieve and not more than 10 percent passing a 3/4-inch sieve.

B. Topsoil: Natural or cultivated surface-soil layer containing organic matter and sand, silt, and clay particles; friable, pervious, and black or a darker shade of brown, gray, or red than underlying subsoil; reasonably free of subsoil, clay lumps, gravel, and other objects more than 2 inches (50 mm) in diameter; and free of weeds, roots, and toxic and other nonsoil materials.

1. Obtain topsoil only from well-drained sites where topsoil is 4 inches deep or more; do not obtain from bogs or marshes.

C. Filter Fabric: Manufacturer's standard, nonwoven, pervious, geotextile fabric of polypropylene, nylon, or polyester fibers.

D. Chain-Link Fence: Metallic-coated steel chain-link fence fabric of 0.120-inch- diameter wire; a minimum of 72 inches high; with 1.9-inch- diameter line posts; 2-3/8-inch-diameter terminal and corner posts; 1-5/8-inch- diameter top rail; and 0.177-inch-diameter bottom tension wire; with tie wires, hog ring ties, and other accessories for a complete fence system. Fence to be posted with a minimum 8.5" x 11" laminated sign stating: "~~TREE PROTECTION ZONE~~Tree protection zone – this fence shall not be removed~~ – THIS FENCE SHALL NOTE BE REMOVED~~".

E. Organic Mulch: Shredded hardwood, free of deleterious materials.

PART 3 - EXECUTION

3.1 PREPARATION

A. Locate and clearly flag trees and vegetation to remain or to be relocated. Protect existing site improvements to remain from damage during construction.

B. Temporary Fencing: Prior to commencement of construction activities, install temporary fencing around tree protection zones to protect remaining trees and other vegetation to remain from construction damage. Maintain temporary fence and remove when construction is complete.

1. Install chain-link fence according to ASTM F 567 and manufacturer's written instructions.

C. Protect tree root systems from damage caused by runoff or spillage of noxious materials while mixing, placing, or storing construction materials. Protect root systems from ponding, eroding, or excessive wetting caused by dewatering operations.

D. Mulch areas inside tree protection zones and within drip line of trees to remain and other areas indicated.

1. Apply 6-inch (152-mm) average thickness of organic mulch. Do not place mulch within 6 inches of tree trunks.

Maintain a 6" layer of chip mulch, free of deleterious materials, over the entire area of the TPZ for the duration of the construction phase. Mulch to be removed by the C~~c~~ontractor after project completion.

E. Do not store construction materials, debris, or excavated material inside tree protection zones. Do not permit vehicles or foot traffic within tree protection zones; prevent soil compaction over root systems.

F. Maintain tree protection zones free of weeds and trash.

G. Do not allow fires within tree protection zones.

H. Irrigation: Contractor shall supply fresh potable water in adequate amounts and rates of application as required to maintain the health of ~~all~~ protected trees and vegetation throughout the duration of the construction operations. Contractor shall maintain a watering schedule and document dates and duration of irrigation applications.

1. Construct a temporary watering basin, as required, on the surface- of the- existing undisturbed grade, with imported soil, to aid in the retention of water around existing protected trees and planting.

I. Protect root systems of existing trees and vegetation from damage due to chemically injurious materials in solution caused by run-off or spillage during mixing or placement of construction materials, and drainage of stored materials. The Contractor shall insure that no foreign material and/or liquid, such as paint, concrete, cement, oil, turpentine, acid or the like, be deposited or allowed to be deposited on soil within the drip line (the outside edge of the foliage overhang) of tree or shrub within 6" of the trunk of a vine. Should such poisoning of the soil occur, the Contractor shall remove said soil as directed by the ~~Owner's Representative and replace with acceptable soil at no expense to the Owner~~Design Consultant.

3.2 EXCAVATION

A. Install shoring or other protective support systems to minimize sloping or benching of excavations.

B. Do not excavate within drip line of trees, unless approved, in writing, by the ~~Owner's~~ City's Representative.

C. Do not excavate within tree protection zones, unless otherwise indicated.

D. Where excavation for new construction is required within tree protection zones, hand clear and excavate to minimize damage to root systems. Use narrow-tine spading forks and comb soil to expose roots.

1. Redirect roots in backfill areas where possible. If encountering large, main lateral roots, expose roots beyond excavation limits as required to bend and redirect them without breaking. If encountered immediately adjacent to location of new construction and redirection is not practical, cut roots approximately 3 inches back from new construction.

2. Do not allow exposed roots to dry out before placing permanent backfill. Provide temporary earth cover or pack with peat moss and wrap with burlap. Water and maintain in a moist condition. Temporarily support and protect roots from damage until they are permanently relocated and covered with soil.

E. Where utility trenches are required within tree protection zones, tunnel under or around roots by drilling, auger boring, pipe jacking, or digging by hand.

1. Root Pruning: Do not cut main lateral roots or taproots; cut only smaller roots that interfere with installation of utilities. Cut roots with sharp pruning instruments; do not break or chop.

3.3 REGRADING

A. Do not backfill against tree trunk.

B. Grade Lowering: Where new finish grade is indicated below existing grade around trees, slope grade beyond tree protection zones. Maintain existing grades within tree protection zones.

C. Grade Lowering: Where new finish grade is indicated below existing grade around trees, slope grade away from trees as recommended by arborist, unless otherwise indicated.

1. Root Pruning: Prune tree roots exposed during grade lowering. Do not cut main lateral roots or taproots; cut only smaller roots. Cut roots with sharp pruning instruments; do not break or chop.

D. Minor Fill: Where existing grade is 6 inches or less below elevation of finish grade, fill with topsoil. Place topsoil in a single uncompacted layer and hand grade to required finish elevations.

E. Moderate Fill: Where existing grade is more than 6 inches but less than 12 inches below elevation of finish grade, place drainage fill, filter fabric, and topsoil on existing grade as follows:

1. Carefully place drainage fill against tree trunk approximately 2 inches above elevation of finish grade and extend not less than 18 inches from tree trunk on each side. For remainder of area within drip-line perimeter, place drainage fill up to 6 inches below elevation of grade.

2. Place filter fabric with edges overlapping 6 inches) minimum.

3. Place fill layer of topsoil to finish grade. Do not compact drainage fill or topsoil. Hand grade to required finish elevations.

3.4 TREE PRUNING

A. Prune trees to remain that are affected by temporary and permanent construction.

B. Prune trees to remain to compensate for root loss caused by damaging or cutting root system. Provide subsequent maintenance during Contract period as recommended by arborist.

1. Type of Pruning: As directed by the Design Consultant.

C. Cut branches with sharp pruning instruments; do not break or chop.

D. Chip removed tree branches and dispose of off-site.

3.5 TREE REPAIR AND REPLACEMENT

A. Promptly repair trees damaged by construction operations within 24 hours. Treat damaged trunks, limbs, and roots according to arborist's written instructions.

B. Remove and replace trees indicated to remain that die or are damaged during construction operations that arborist determines are incapable of restoring to normal growth pattern.

1. Provide new trees of same size and species as those being replaced; plant and maintain as specified in Division 32 Section "Plants."

2. Provide new trees of 6-inch caliper size and of a species selected by Design Consultant when damaged trees more than 6 inches in caliper size, measured 12 inches above grade, are required to be replaced. Plant and maintain new trees as specified in Division 32 Section "Plants."

C. Aerate surface soil, compacted during construction, 10 feet beyond drip line and no closer than 36 inches to tree trunk. Drill 2-inch- diameter holes a minimum of 12 inches deep at 24 inches o.c. Backfill holes with an equal mix of augered soil and sand.

3.6 DISPOSAL OF WASTE MATERIALS

A. Burning is not permitted.

B. Disposal: Remove excess excavated material and displaced trees from ~~Owner's~~ the property.

END OF SECTION

SECTION 01 60 00 - PRODUCT REQUIREMENTS

PART 1 - GENERAL

1.1 SUMMARY

A. Section includes the following administrative and procedural requirements:

1. Definitions
2. Submittals
3. Quality assurance
4. Product delivery, storage, and handling.
5. Product warranties.
6. Product options.
~~7.Product substitutions; and comparable products.~~
7. Seismic anchorage
8. Protection of installed products

B. Related requirements:

1. The following in other Sections of Division 01.

   a. References.
   b. Substitution procedures.
   c. Closeout procedures.

2. Divisions 02 through 33 Sections for specific requirements for warranties on products and installations specified to be warranted.

1.2 DEFINITIONS

A. Products: Items purchased for incorporating into the Work, whether purchased for Project or taken from previously purchased stock.

1. Named products: Items identified by manufacturer's product name, including make or model number or other designation, shown or listed in manufacturer's published product literature that is current as of date of the Contract Documents.
2. New products: Items that have not previously been incorporated into another project or facility, except that products consisting of recycled-content materials are allowed, unless stated otherwise. Products salvaged or recycled from other projects are not considered new products.
3. Comparable product: Product demonstrated and approved through submittal process, or where indicated as a product substitution, with the indicated qualities related to type, function, dimension, in-service performance, physical properties, appearance, and other characteristics that equal or exceed those of specified product.

B. Substitutions: Changes in products, materials, equipment, and methods of construction from those required by the Contract Documents and proposed by Contractor.

C. “Basis of design” product specification: Where a specific manufacturer's product is named and accompanied by the words "basis of design," including make or model number or other designation, to establish the significant qualities related to type, function, dimension, in-service performance, physical properties, appearance, and other characteristics for purposes of evaluating comparable products of other named manufacturers.

D. Manufacturer's warranty: Pre-printed warranty published by individual manufacturer for a particular product and specifically endorsed by manufacturer to City.
E. Special warranty: Written warranty required by or incorporated into the Contract Documents, either to extend time limit provided by manufacturer's warranty or to provide additional rights to the City.

1.3 SUBMITTALS

A. Product list: Submit a list, in tabular from, listing specified products. Include generic names of products required. Include manufacturer's name and proprietary product names for each product.

1. Coordinate product list with Contractor's Construction Schedule and the Submittals Schedule.
2. Form: Tabulate information for each product under the following column headings.

a. Specification Section number and title.
b. Generic name used in the Contract Documents.
c. Proprietary name, model number, and similar designations.
d. Manufacturer's name and address.
e. Supplier's name and address.
f. Installer's name and address.
g. Projected delivery date or time span of delivery period.
h. Identification of items that require early submittal approval for scheduled delivery date.

3. Initial submittal:

a. Within 30 days after date of commencement of the Work, submit 3 copies of initial product list. Include a written explanation for omissions of data and for variations from Contract requirements.
b. At Contractor's option, initial submittal may be limited to product selections and designations that must be established early in Contract period.

4. Completed list: Within 60 days after date of commencement of the Work, submit 3 copies of completed product list. Include a written explanation for omissions of data and for variations from Contract requirements.
5. Design Consultant's action:

a. Design Consultant will respond in writing to Contractor within 15 days of receipt of completed product list.
b. Design Consultant's response will include a list of unacceptable product selections and a brief explanation of reasons for this action.
c. Design Consultant's response, or lack of response, does not constitute a waiver of requirement that products comply with the Contract Documents.

~~B.Substitution requests: Submit 3 copies of each request for consideration. Identify product or fabrication or installation method to be replaced. Include Specification Section number and title and Drawing numbers and titles.~~

~~1.Substitution request form: Use form acceptable to the Design Consultant.~~

~~2.Documentation: Show compliance with requirements for substitutions and the following, as applicable.~~

~~a.Statement indicating why specified material or product cannot be provided.~~
~~b.Coordination information, including a list of changes or modifications needed to other parts of the Work and to construction performed by City and separate contractors that will be necessary to accommodate proposed substitution.~~
~~c.Detailed comparison of significant qualities of proposed substitution with those of the Work specified. Significant qualities may include attributes such as performance, weight, size, durability, visual effect, and specific features and requirements indicated.~~
~~d.Product Data, including drawings and descriptions of products and fabrication and installation procedures.~~
~~e.Samples, where applicable or requested.~~
~~f.List of similar installations for completed projects with project names and addresses and names and addresses of Design Consultants and Citys.~~
~~g.Material test reports from a qualified testing agency indicating and interpreting test results for compliance with requirements indicated.~~
~~h.Research/evaluation reports evidencing compliance with building code in effect for Project, from a model code organization acceptable to authorities having jurisdiction.~~
~~i.Detailed comparison of Contractor's Construction Schedule using proposed substitution with products specified for the Work, including effect on the overall Contract Time. If specified product or method of construction cannot be provided within the Contract Time, include letter from manufacturer, on manufacturer's letterhead, stating lack of availability or delays in delivery.~~
~~j.Cost information, including a proposal of change, if any, in the Contract Sum.~~
~~k.Contractor's certification that proposed substitution complies with requirements in the Contract Documents and is appropriate for applications indicated.~~
~~l.Contractor's waiver of rights to additional payment or time that may subsequently become necessary because of failure of proposed substitution to produce indicated results.~~

~~3.Design Consultant's action: If necessary, Design Consultant will request additional information or documentation for evaluation within one week of receipt of a request for substitution. Design Consultant will notify Contractor of acceptance or rejection of proposed substitution within 15 days of receipt of request, or 7 days of receipt of additional information or documentation, whichever is later.~~

~~a.Form of acceptance: Change Order.~~
~~b.Use product specified if Design Consultant cannot make a decision on use of a proposed substitution within time allocated.~~

B. Basis-of-design product specification submittal: Comply with requirements elsewhere in Division 01. Show compliance with requirements.

1.4 QUALITY ASSURANCE

A. Compatibility of options: If Contractor is given option of selecting between 2 or more products for use on Project, product selected shall be compatible with products previously selected, even if previously selected products were also options.

B. Exceptions:

1. Listing manufacturer's name and model number after product description does not constitute guarantee or representation on part of City and Design Consultant that maker listed will provide item specified at time of bidding or when needed for construction.
2. It is incumbent on bidders to verify availability of all items required and base their bids on quotations from provides who can and will supply items meeting detailed product specifications in time to meet Contractor's construction schedule.
3. Model numbers listed may not include all options or modifications required by the Specifications or to complete the Work.

C. Unless otherwise specified, material and equipment for Work shall be essentially standard product of manufacturer regularly engaged in production of such materials and equipment or materials and equipment of comparable character.

1.5 PRODUCT DELIVERY, STORAGE, AND HANDLING

A. Deliver, store, and handle products using means and methods that will prevent damage, deterioration, and loss, including the-foot Comply with the products manufacturer written instructions.

1. Schedule delivery to minimize long-term storage at Project site and to prevent overcrowding of construction spaces.
2. Coordinate delivery with installation time to ensure minimum holding time for items that are flammable, hazardous, easily damaged, or sensitive to deterioration, theft, and other losses.
3. Deliver products to Project site in an undamaged condition in manufacturer's original sealed container or other packaging system, complete with labels and instructions for handling, storing, unpacking, protecting, and installing.
4. Inspect products on delivery to ensure compliance with the Contract Documents and to ensure that products are undamaged and properly protected.
5. Store products to allow for inspection and measurement of quantity or counting of units.
6. Store materials so that they will not endanger Project structure.
7. Store products subject to damage by the elements, under cover in a weathertight enclosure above ground, with ventilation adequate to prevent condensation.
8. Periodically inspect to assure products are undamaged and are maintained under required conditions.
9. Comply with product manufacturer written instructions for temperature, humidity, ventilation, and weather-protection requirements for storage.
10. Protect stored products from damage.

B. Storage: Provide a secure location and enclosure at Project site for storage of materials and equipment by City's construction forces. Coordinate location with City.

1.6 PRODUCT WARRANTIES

A. General: Warranties specified in other Sections are in addition to, and run concurrent with, other warranties required by the Contract Documents. Manufacturer's disclaimers and limitations on product warranties do not relieve Contractor of obligations under requirements of the Contract Documents.

B. Special warranties: Prepare a written document that contains appropriate terms and identification, ready for execution. Submit a draft for approval before final execution.

1. Manufacturer's standard form: Modified to include Project-specific information and properly executed.
2. Specified form: Forms are included with the Specifications. Prepare a written document using appropriate form properly executed.
3. Refer to Divisions 02 through 33Sections for specific content requirements and particular requirements for submitting special warranties.

C. Submittal time: Comply with requirements specified elsewhere in Division 01.

PART 2 - PRODUCTS

2.1 PRODUCT OPTIONS

A. General product requirements: Provide products that comply with the Contract Documents, that are undamaged, and unless otherwise indicated, that are new at time of installation.

1. Provide products complete with accessories, trim, finish, fasteners, and other items needed for a complete installation and indicated use and effect.
2. If available, and unless custom products or nonstandard options are specified, provide standard products of types that have been produced and used successfully in similar situations on other projects.
3. City reserves the right to limit selection to products with warranties not in conflict with requirements of the Contract Documents.
4. Where products are accompanied by the term "as selected," Design Consultant will make selection.
5. Where products are accompanied by the term "match sample," sample to be matched is Design Consultant's control sample.
6. Descriptive, performance, and reference standard requirements in the Specifications establish "salient characteristics" of products.
7. Where products are specified by name and accompanied by the term "or equal" or "or approved equal" comply with provisions in "Comparable Products" Article to obtain approval for use of an unnamed product.

B. Product selection procedures: Procedures for product selection include the following:

1. Product: Where Specification paragraphs or subparagraphs titled "Product" name a single product and manufacturer followed by “no” substitution, provide the product named.
2. Manufacturer/source: Where Specification paragraphs or subparagraphs titled "Manufacturer" or "Source" name single manufacturers or sources, provide a product by the manufacturer or from the source named that complies with requirements.
3. Products: Where Specification paragraphs or subparagraphs titled "Products" introduce a list of names of both products and manufacturers, provide one of the products listed that complies with requirements.
4. Manufacturers: Where Specification paragraphs or subparagraphs titled "Manufacturers" introduce a list of manufacturers' names, provide a product by one of the manufacturers listed that complies with requirements.

5. Basis-of-design products: Where Specification paragraphs or subparagraphs titled "Basis-of-Design Product" are included and also introduce or refer to a list of manufacturers' names, provide either the specified product or a comparable product by one of the other named manufacturers. Drawings and Specifications indicate sizes, profiles, dimensions, and other characteristics that are based on the product named. Comply with provisions above to obtain approval for use of an unnamed product.
6. Visual matching specification:

    a. Where Specifications require matching an established Sample, select a product (and manufacturer) that complies with requirements and matches Design Consultant's sample. Design Consultant's control decision will be final on whether a proposed product matches satisfactorily.
    b. If no product available within specified category matches satisfactorily and complies with other specified requirements, comply with provisions of the Contract Documents on "substitutions" for selection of a matching product.

7. Visual selection specification: Where Specifications include the phrase "as selected from manufacturer's colors, patterns, textures" or a similar phrase, select a product (and manufacturer) that complies with other specified requirements.

    a. Standard range: Where Specifications include the phrase "standard range of colors, patterns, textures" or similar phrase, Design Consultant will select color, pattern, or texture from manufacturer's product line that does not include premium items.
    b. Full range: Where Specifications include the phrase "full range of colors, patterns, textures" or similar phrase, Design Consultant will select color, pattern, or texture from manufacturer's product line that includes both standard and premium items.

~~2.2PRODUCT SUBSTITUTIONS~~

~~A.Timing: Design Consultant will consider requests for substitution when the following conditions are satisfied. If the following conditions are not satisfied, Design Consultant will return requests without action, except to record noncompliance with these requirements.~~

~~1.Requested substitution offers City a substantial advantage in cost, time, energy conservation, or other considerations, after deducting additional responsibilities City must assume. City's additional responsibilities may include compensation to Design Consultant for redesign and evaluation services, increased cost of other construction by City, and similar considerations.~~
~~2.Requested substitution does not require extensive revisions to the Contract Documents.~~
~~3.Requested substitution is consistent with the Contract Documents and will produce indicated results.~~
~~4.Substitution request is fully documented and properly submitted.~~
~~5.Requested substitution will not adversely affect Contractor's Construction Schedule.~~
~~6.Requested substitution has received necessary approvals of authorities having jurisdiction.~~
~~7.Requested substitution is compatible with other portions of the Work.~~
~~8.Requested substitution has been coordinated with other portions of the Work.~~
~~9.Requested substitution provides specified warranty.~~
~~10.If requested substitution involves more than one contractor, requested substitution has been coordinated with other portions of the Work, is uniform and consistent, is compatible with other products, and is acceptable to all contractors involved.~~

2.2 COMPARABLE PRODUCTS

A. Where products or manufacturers are specified by name, submit the following, in addition to other required submittals, to obtain approval of an unnamed product:

1. Evidence that the proposed product does not require extensive revisions to the Contract Documents that it is consistent with the Contract Documents, and will produce the indicated results, and that it is compatible with other portions of the Work.
2. Detailed comparison of significant qualities of proposed product with those named in the Specifications. Significant qualities include attributes such as performance, weight, size, durability, visual effect, and specific features and requirements indicated.
3. Evidence that proposed product provides specified warranty.
4. List of similar installations for completed projects with project names and addresses and names and addresses of Design Consultants and Citys, if requested.
5. Samples, if requested.

PART 3 - EXECUTION

3.1 SEISMIC ANCHORAGE

A. Except where specifically noted otherwise in the Specifications, for delegated design assemblies anchor equipment, architectural features, and appurtenant facilities to resist the minimum following seismic forces:

1. Horizontal and vertical forces: In accordance with the CBC.
2. Weight of equipment or facilities shall include contents therein, and be the operating weight.
3. Shop drawings incorporating seismic anchorage shall be stamped by a California-licensed professional engineer that designed the anchorage. With submittal, include calculations showing compliance with the CBC.

B. This requirement applies, but is not limited to, such items as light fixtures, electrical panels, switchgear, tanks, pumps, chillers, boilers, piping, pipe supports and hangers, athletic equipment, motors, cabinets, shelving, control panels, starters, fans, and air ducts, etc.

C. The horizontal force shall be considered as acting in any direction in a horizontal plane.

D. Vertical force shall be considered as acting upwards or downwards in a vertical plane.

E. Design of entire anchoring system and furnishing of any part of anchoring system that must be integral with equipment or facilities shall be responsibility of the Contractor. The Contractor, working closely with manufacturer, supplier, or both, and with a California-licensed professional engineer, shall be responsible for designing, furnishing, and installing anchors or restraints that relate to the facility. Examples, but not limited to these noted, are anchor bolts, Unistrut retaining curbs, housekeeping pads, walls, or resisting seismic forces, additional structural elements may be required.

F. Except where specifically noted otherwise in the Specifications, submit certification for equipment in Division 02 through 33, inclusive, that equipment anchorage complies with requirements of this article. Also submit sketch or description of anchorage system where certification is required. City will require submission of calculations prepared by California-registered professional engineer to substantiate anchorage design if design does not appear to be adequate.

G. Perform one field test for shear and/or pullout of each kind of anchorage assembly. If assembly fails, revise, reinstall, or otherwise correct such assemblies installed in the Work, and retest, at no additional cost to City.

3.2 PROTECTION

A. After installation, provide coverings to protect products from damage from traffic, construction operations, drywall dust, dirt, etc., and remove when installation is complete and covering is no longer needed.

END OF SECTION

SECTION 01 74 19 – CONSTRUCTION WASTE MANAGEMENT

PART 1 - GENERAL

1.1 RELATED DOCUMENTS

A. Drawings and general provisions of the Contract, including General and Supplementary Conditions and other Division 01 Specification Sections, apply to this Section.

1.2 SUMMARY

A. This Section includes administrative and procedural requirements for the following:
   1. Salvaging, recycling and disposing of nonhazardous demolition and construction waste as required in LEED MRc2 Construction Waste Management.
   2. Salvaging, recycling and disposing of nonhazardous demolition and construction waste as required by City of Santa Monica Construction and Demolition Debris Ordinance #1996.

1.3 DEFINITIONS

A. Construction and Demolition Waste (LEED): Includes waste and recyclables generated from construction and demolition. It does not include land-clearing debris, such as soil, vegetation and rocks.

B. Construction and Demolition Waste: Building and site improvement waste and recyclables materials resulting from demolition or construction.

C. Disposal: Removal off-site of demolition and construction waste and subsequent sale, recycling, reuse, or deposit in landfill or incinerator acceptable to authorities having jurisdiction.

D. Recycle: Recovery of demolition or construction waste for subsequent processing in preparation for reuse.

E. Salvage: Recovery of demolition or construction waste and subsequent sale or reuse in another facility.

1.4 PERFORMANCE REQUIREMENTS

A. General: Develop waste management plan that results in end-of-Project rates for salvage/recycling of 95-percent by weight (75-percent minimum allowable) of total waste generated by the work.

B. Salvage/ Recycle Requirements: Salvage and recycle as much nonhazardous demolition and construction waste as possible including, as applicable, the following materials:
   1. Demolition Waste:

      a. Asphaltic concrete paving.
      b. Concrete.
      c. Concrete reinforcing steel.
      d. Brick.
      e. Concrete masonry units.
      f. Plywood and oriented strand board.
      g. Wood paneling.
      h. Wood trim.

i. Structural and miscellaneous steel.
j. Rough hardware.
k. Roofing.
l. Insulation.
m. Doors and frames.
n. Door hardware.
o. Windows.
p. Glazing.
q. Metal studs.
r. Gypsum board.
s. Acoustical tile and panels.
t. Carpet.
u. Carpet pad.
v. Demountable partitions.
w. Equipment.
x. Cabinets.
y. Plumbing fixtures.
z. Piping.
aa. Supports and hangers.
bb. Valves.
cc. Sprinklers.
dd. Mechanical equipment.
ee. Refrigerants.
ff. Electrical Conduit.
gg. Copper Wiring.
hh. Lighting fixtures.
ii. Lamps.
jj. Ballasts.
kk. Electrical devices.
ll. Switchgear and panelboards.
mm. Transformers.

2. Construction Waste:

a. Site-clearing waste.
b. Masonry and CMU.
c. Lumber.
d. Wood sheet materials.
e. Wood trim.
f. Metals.
g. Roofing.
h. Insulation.
i. Carpet.
j. Gypsum board.
k. Piping.
l. Electrical conduit.
m. Packaging: Regardless of salvage/recycle goal specified above, salvage or recycle 100 percent of the following uncontaminated packaging materials:

1) Paper.
2) Cardboard.
3) Boxes.
4) Plastic sheet and trim.
5) Polystyrene packaging.
6) Wood crates.
7) Plastic pails.

1.5 SUBMITTALS

A. Waste Management Plan: Submit three copies of plan within 30-days of date established for the Notice to Proceed.

B. Waste Reduction Progress Reports: Concurrent with each Application for Payment, submit three copies of report. Include separate reports for demolition and construction waste. Include the following information:
   1. Material category.
   2. Generation point of waste.
   3. Total quantity of waste in tons.
   4. Quantity of waste salvaged, both estimated and actual tons.
   5. Quantity of waste recycled, both estimated and actual tons.
   6. Location and name of Material Recovery Facility or Landfill.
   7. Letter from government agency verifying recovery rates.

C. Waste Reduction Calculations: Before request for Substantial Completion, submit copies of calculated end-of-Project rates for salvage, recycling, and disposal as a percentage of total waste generated by the Work.

D. Records of Donations: Indicate receipt and acceptance of salvageable waste donated to individuals and organizations. Indicate whether organization is tax exempt.

E. Records of Sales: Indicate receipt and acceptance of salvageable waste sold to individuals and organizations. Indicate whether organization is tax exempt.

F. Recycling and Processing Facility Records: Indicate receipt and acceptance of recyclable waste by recycling and processing facilities licensed to accept them. Include manifests, weight tickets, receipts, and invoices.

G. Landfill and Incinerator Disposal Records: Indicate receipt and acceptance of waste by landfills and incinerator facilities licensed to accept them. Include manifests, weight tickets, receipts, and invoices.

H. LEED Submittal: LEED form for Credit MR 2, signed by General Contractor tabulating total waste material, quantities diverted and means by which it is diverted, and statement that requirements for the credit have been met.

I. Qualification Data: For Waste Management Coordinator.

1.6 QUALITY ASSURANCE

A. Waste Management Coordinator Qualifications: LEED Accredited Professional by U.S. Green Building Council.

B. Regulatory Requirements: Comply with hauling and disposal regulations of authorities having Jurisdiction.

C. Waste Management Conference: Conduct conference at Project site. Review methods and procedures related to waste management including, but not limited to, the following:
   1. Review and discuss waste management plan including responsibilities of Waste Management Coordinator.
   2. Review requirements for documenting quantities of each type of waste and its disposition.
   3. Review and finalize procedures for materials separation and verify availability of containers and bins needed to avoid delays.

4. Review procedures for periodic waste collection and transportation to recycling and disposal facilities.
5. Review waste management requirements for each trade.

1.7 WASTE MANAGEMENT PLAN

A. General: Develop plan that complies with City of Santa Monica Construction & Demolition Debris Ordinance #1996. Plan consisting of waste identification, waste reduction work plan, and diversion goals, implementation protocols, and parties responsible. Indicate quantities in tons throughout waste management plan.

B. Waste Identification: Indicate anticipated types and quantities of demolition site-clearing and construction waste generated by the work. Include estimated quantities and assumptions for estimates.

C. Waste Reduction Work Plan: List each type of waste and whether it will be salvaged, recycled, or disposed of in landfill or incinerator. Include points of waste generation, total quantity of each type of waste, quantity for each means of recovery, and handling and transportation procedures.
   1. Salvaged Materials for Reuse: For materials that will be salvaged and reused in this Project, describe methods for preparing salvaged materials before incorporation into the Work.
   2. Salvaged Materials for Sale: For materials that will be sold to individuals and organizations, include list of their names, addresses, and telephone numbers.
   3. Salvaged Materials for Donation: For materials that will be donated to individuals and organizations, include list of their names, addresses, and telephone numbers.
   4. Recycled Materials: Include only City of Santa Monica approved Recycling Facilities and type of recycled materials each will accept. Include names, addresses, and telephone numbers.
   5. Disposed Materials: Indicate name of City of Santa Monica Public Works' approved private hauler and how and where materials will be disposed of. Include name, address, and telephone number of each landfill and incinerator facility.
   6. Handling and Transportation Procedures: Include method that will be used for separating recyclable waste including sizes of containers, container labeling, and designated location on Project site where materials separation will be located.

PART 2 - PRODUCTS (NOT USED)

PART 3 - EXECUTION

3.1 PLAN IMPLEMENTATION

A. General: Implement waste management plan as approved by the City of Santa Monica. Provide handling, containers, storage, signage, transportation, and other items as required to implement waste management plan during the entire duration of the Contract.

B. Waste Management Coordinator: Engage a waste management coordinator to be responsible for implementing, monitoring, and reporting status of waste management work plan. Coordinator shall be present at Project site full time for duration of Project.

C. Training: Train workers, subcontractors, and suppliers on proper waste management procedures, as appropriate for the Work occurring at Project site.

1. Distribute waste management plan to everyone concerned within three days of submittal return.
2. Distribute waste management plan to entities when they first begin work on-site. Review plan procedures and locations established for salvage, recycling, and disposal.

D. Site Access and Temporary Controls: Conduct waste management operations to ensure minimum interference with roads, streets, walks, walkways, and other adjacent occupied and used facilities.
1. Designate waste management plan to entities when they first begin work on-site. Review plan procedures and locations established for salvage, recycling, and disposal.

3.2 SALVAGING DEMOLITION WASTE

A. Salvaged Items for Reuse in the Work:
1. Clean salvaged items.
2. Pack or crate items after cleaning. Identify contents of containers.
3. Store items in secure area until installation.
4. Protect items from damage during transport and storage.
5. Install salvaged items to comply with installation requirements for new materials and equipment. Provide connections, supports, and miscellaneous materials necessary to make items functional.

3.3 RECYLCING DEMOLTION AND CONSTRUCTION WASTE, GENERAL

A. General: Recycle paper and beverage containers used by on-site workers.

B. Approved Private Haulers:
http://www.smgov.net/uploadedFiles/Departments/Public_Works/Solid_Waste/Approved_Haulers.pdf

C. Approved C&D Recycling Facilities:
http://www.smgov.net/uploadedFiles/Departments/Public_Works/Solid_Waste/Approved_CD_Facilities.pdf

D. Procedures: To the maximum extent possible, separate recyclable waste from other waste materials, trash, and debris.
1. Provide appropriately marked containers or bins for controlling recyclable waste until they are removed from Project site. Include list of acceptable and unacceptable materials at each container and bin. Inspect containers and bins for contamination and remove contaminated materials if found.
2. Stockpile processed materials on-site without intermixing other materials. Place, grade, and shape stockpiles to drain surface water. Cover to prevent windblown dust.
3. Stockpile materials away from construction area. Do not store within drip line of remaining trees.
4. Store components off the ground and protect from the weather.
5. Remove recyclable waste off property and transport to recycling receiver or processor.

END OF SECTION

SECTION 017700 - CLOSEOUT PROCEDURES

PART 1 - GENERAL

1.1 RELATED DOCUMENTS

A. Drawings, Addenda, General Conditions, Construction Contract and other Division 1 Specification Sections, apply to this Section.

1.2 SUMMARY

A. This Section includes administrative and procedural requirements for contract closeout, including, but not limited to, the following:

1. Inspection procedures.
2. Project Record Documents.
3. Operation and maintenance manuals.
4. Warranties.
5. Instruction of City's personnel.
6. Final cleaning.

B. Related Sections include the following:

1. Division 1 Section "Payment Procedures" for requirements for Applications for Payment for Substantial and Final Completion.
2. Division 1 Section "Construction Progress Documentation" for submitting Final Completion construction photographs and negatives.
3. Division 1 Section "Photographic Documentation" for submitting Final Completion construction photographs and negatives.
4. Division 1 Section "Execution Requirements" for progress cleaning of Site.
5. Division 1 Section "Project Record Documents" for submitting Record Drawings, Record Specifications, and Record Product Data.
6. Division 1 Section "Operation and Maintenance Data" for operation and maintenance manual requirements.
7. Division 1 Section "Demonstration and Training" for requirements for instruction of City's personnel.
8. Divisions 2 through 16 Sections for specific closeout and special cleaning requirements for products of those Sections.

1.3 SUBSTANTIAL COMPLETION

A. Inspection: Submit a written request for inspection for Substantial Completion. On receipt of request, Construction Manager] will either proceed with inspection or notify Contractor of unfulfilled requirements. Construction Manager will prepare the

Certificate of Substantial Completion after inspection or will notify Contractor of items that must be completed or corrected before certificate will be issued.

1. Reinspection: Request reinspection when the Work identified in previous inspections as incomplete is completed or corrected.
2. Results of completed inspection will form the basis of requirements for Final Completion.

1.4 FINAL COMPLETION

A. Inspection: Submit a written request for final inspection for acceptance. On receipt of request, Construction Manager will either proceed with inspection or notify Contractor of unfulfilled requirements. Construction Manager will prepare a final Progress Payment after inspection or will notify Contractor of construction that must be completed or corrected before final payment will be issued.

1. Reinspection: Request reinspection when the Work identified in previous inspections as incomplete is completed or corrected.

1.5 PROJECT RECORD DOCUMENTS

A. General: Do not use Project Record Documents for construction purposes. Protect Project Record Documents from deterioration and loss. Provide access to Project Record Documents for Construction Manager's reference during normal working hours.

B. Record Drawings: Maintain and submit one set of blue- or black-line white prints of Contract Drawings and Shop Drawings.

1. Mark Record Prints to show the actual installation where installation varies from that shown originally. Require individual or entity who obtained record data, whether individual or entity is Installer, subcontractor, or similar entity, to prepare the marked-up Record Prints.

    a. Give particular attention to information on concealed elements that cannot be readily identified and recorded later.
    b. Accurately record information in an understandable drawing technique.
    c. Record data as soon as possible after obtaining it. Record and check the markup before enclosing concealed installations.
    d. Mark Contract Drawings or Shop Drawings, whichever is most capable of showing actual physical conditions, completely and accurately. Where Shop Drawings are marked, show cross-reference on Contract Drawings.

2. Mark record sets with erasable, red-colored pencil. Use other colors to distinguish between changes for different categories of the Work at the same location.

3. Mark important additional information that was either shown schematically or omitted from original Drawings.
4. Note Construction Change Directive numbers, Change Order numbers, alternate numbers, and similar identification where applicable.
5. Identify and date each Record Drawing; include the designation "PROJECT RECORD DRAWING" in a prominent location. Organize into manageable sets; bind each set with durable paper cover sheets. Include identification on cover sheets.

C. Record Specifications: Submit one copy of Project's Specifications, including addenda and contract modifications. Mark copy to indicate the actual product installation where installation varies from that indicated in Specifications, addenda, and contract modifications.

1. Give particular attention to information on concealed products and installations that cannot be readily identified and recorded later.
2. Mark copy with the proprietary name and model number of products, materials, and equipment furnished, including substitutions and product options selected.
3. Note related Change Orders, Record Drawingsand Product Data, where applicable.

D. Record Product Data: Submit one copy of each Product Data submittal. Mark one set to indicate the actual product installation where installation varies substantially from that indicated in Product Data.

1. Give particular attention to information on concealed products and installations that cannot be readily identified and recorded later.
2. Include significant changes in the product delivered to Site and changes in manufacturer's written instructions for installation.
3. Note related Change Orders, Record Drawings, where applicable.

E. Miscellaneous Record Submittals: Assemble miscellaneous records required by other Specification Sections for miscellaneous record keeping and submittal in connection with actual performance of the Work. Bind or file miscellaneous records and identify each, ready for continued use and reference.

1.6 OPERATION AND MAINTENANCE MANUALS

A. Assemble a complete set of operation and maintenance data indicating the operation and maintenance of each system, subsystem, and piece of equipment not part of a system. Include operation and maintenance data required in individual Specification Sections and as follows:

1. Operation Data:

a. Emergency instructions and procedures.

b. System, subsystem, and equipment descriptions, including operating standards.
c. Operating procedures, including startup, shutdown, seasonal, and weekend operations.
d. Description of controls and sequence of operations.
e. Piping diagrams.

2. Maintenance Data:

a. Manufacturer's information, including list of spare parts.
b. Name, address, and telephone number of Installer or supplier.
c. Maintenance procedures.
d. Maintenance and service schedules for preventive and routine maintenance.
e. Maintenance record forms.
f. Sources of spare parts and maintenance materials.
g. Copies of maintenance service agreements.
h. Copies of warranties and bonds.

B. Organize operation and maintenance manuals into suitable sets of manageable size. Bind and index data in heavy-duty, 3-ring, vinyl-covered, loose-leaf binders, in thickness necessary to accommodate contents, with pocket inside the covers to receive folded oversized sheets. Identify each binder on front and spine with the printed title "OPERATION AND MAINTENANCE MANUAL," Project name, and subject matter of contents.

1.7 WARRANTIES

A. Submittal Time: Submit written warranties for designated portions of the Work where commencement of warranties other than date of Substantial Completion is indicated.

B. Partial Occupancy: Submit properly executed warranties of the Work that are completed.

C. Organize warranty documents into an orderly sequence based on the table of contents of the Special Provisions and Technical Specifications (SPTS).

1. Bind warranties and bonds in heavy-duty, 3-ring, vinyl-covered, loose-leaf binders, thickness as necessary to accommodate contents, and sized to receive 8-1/2-by-11-inch (115-by-280-mm) paper.
2. Provide heavy paper dividers with plastic-covered tabs for each separate warranty. Mark tab to identify the product or installation. Provide a typed description of the product or installation, including the name of the product and the name, address, and telephone number of Installer.
3. Identify each binder on the front and spine with the typed or printed title "WARRANTIES," Project name, and name of Contractor.

PART 2 - PRODUCTS (Not Used)

PART 3 -

PART 4 - EXECUTION

4.1 FINAL CLEANING

A. General: Provide final cleaning. Conduct cleaning and waste-removal operations to comply with local laws and ordinances and Federal and local environmental and antipollution regulations.

B. Cleaning: Employ experienced workers or professional cleaners for final cleaning. Clean each surface or unit to condition expected in an average commercial building cleaning and maintenance program. Comply with manufacturer's written instructions.

END OF SECTION SM01770

SECTION SM01782 - OPERATION AND MAINTENANCE DATA

PART 1 - GENERAL

1.1 RELATED DOCUMENTS

A. Drawings, Addenda, General Conditions, Construction Contract and other Division 1 Specification Sections, apply to this Section.

1.2 SUMMARY

A. This Section includes administrative and procedural requirements for preparing operation and maintenance manuals, including the following:

1. Operation and maintenance documentation directory.
2. Emergency manuals.
3. Operation manuals for systems, subsystems, and equipment.
4. Maintenance manuals for the care and maintenance of products, materials, finishes and systems and equipment.

B. Related Sections include the following:
1. Division 1 Section "Submittal Procedures" for submitting copies of submittals for operation and maintenance manuals.
2. Division 1 Section "Closeout Procedures" for submitting operation and maintenance manuals.
3. Divisions 2 through 16 Sections for specific operation and maintenance manual requirements for products in those Sections.

1.3 DEFINITIONS

A. System: An organized collection of parts, equipment, or subsystems united by regular interaction.

B. Subsystem: A portion of a system with characteristics similar to a system.

1.4 SUBMITTALS

A. Initial Submittal: Submit 2 draft copies of each manual at least 15 days before requesting inspection for Substantial Completion. Include a complete operation and maintenance directory. Construction Manager will return 1 copy of draft and mark whether general scope and content of manual are acceptable.

B. Final Submittal: Submit 2 copies of each manual in final form at least 15 days before final inspection. Construction Manager will return copy with comments within 15 days after final inspection.

1.5 COORDINATION

A. Where operation and maintenance documentation includes information on installations by more than one factory-authorized service representative, assemble and coordinate information furnished by representatives and prepare manuals.

PART 2 - PRODUCTS

2.1 OPERATION AND MAINTENANCE DOCUMENTATION DIRECTORY

A. Organization: Include a section in the directory for each of the following:

1. List of documents.
2. List of systems.
3. List of equipment.
4. Table of contents.

B. List of Systems and Subsystems: List systems alphabetically. Include references to operation and maintenance manuals that contain information about each system.

C. List of Equipment: List equipment for each system, organized alphabetically by system. For pieces of equipment not part of system, list alphabetically in separate list.

D. Tables of Contents: Include a table of contents for each emergency, operation, and maintenance manual.

E. Identification: In the documentation directory and in each operation and maintenance manual, identify each system, subsystem, and piece of equipment with the same designation used in the Contract Documents. If no designation exists, assign a designation according to ASHRAE Guideline 4, "Preparation of Operating and Maintenance Documentation for Building Systems."

2.2 MANUALS, GENERAL

A. Organization: Unless otherwise indicated, organize each manual into a separate section for each system and subsystem, and a separate section for each piece of equipment not part of a system. Each manual shall contain the following materials, in the order listed:

1. Title page.
2. Table of contents.

3. Manual contents.

B. Title Page: Enclose title page in transparent plastic sleeve. Include the following information:

1. Subject matter included in manual.
2. Name and address of Project.
3. Name and address of City.
4. Date of submittal.
5. Name, address, and telephone number of Contractor.
6. Name and address of Architect.
7. Cross-reference to related systems in other operation and maintenance manuals.

C. Table of Contents: List each product included in manual, identified by product name, indexed to the content of the volume, and cross-referenced to Specification Section number in Special Provisions and Technical Specifications (SPTS).

1. If operation or maintenance documentation requires more than one volume to accommodate data, include comprehensive table of contents for all volumes in each volume of the set.

D. Manual Contents: Organize into sets of manageable size. Arrange contents alphabetically by system, subsystem, and equipment. If possible, assemble instructions for subsystems, equipment, and components of one system into a single binder.

1. Binders: Heavy-duty, 3-ring, vinyl-covered, loose-leaf binders, in thickness necessary to accommodate contents, sized to hold 8-1/2-by-11-inch (115-by-280-mm) paper; with clear plastic sleeve on spine to hold label describing contents and with pockets inside covers to hold folded oversize sheets.
   a. Identify each binder on front and spine, with printed title "OPERATION AND MAINTENANCE MANUAL," Project title or name, and subject matter of contents. Indicate volume number for multiple-volume sets.

2. Dividers: Heavy-paper dividers with plastic-covered tabs for each section. Mark each tab to indicate contents. Include typed list of products and major components of equipment included in the section on each divider, cross-referenced to Specification Section number and title of Special Provisions and Technical Specifications (SPTS).
3. Protective Plastic Sleeves: Transparent plastic sleeves designed to enclose diagnostic software diskettes for computerized electronic equipment.
4. Supplementary Text: Prepared on 8-1/2-by-11-inch (115-by-280-mm), 20-lb/sq. ft. (75-g/sq. m) white bond paper.
5. Drawings: Attach reinforced, punched binder tabs on drawings and bind with text.

   a. If oversize drawings are necessary, fold drawings to same size as text pages and use as foldouts.

b. If drawings are too large to be used as foldouts, fold and place drawings in labeled envelopes and bind envelopes in rear of manual. At appropriate locations in manual, insert typewritten pages indicating drawing titles, descriptions of contents, and drawing locations.

2.3 EMERGENCY MANUALS

A. Content: Organize manual into a separate section for each of the following:

1. Type of emergency.
2. Emergency instructions.
3. Emergency procedures.

B. Type of Emergency: Where applicable for each type of emergency indicated below, include instructions and procedures for each system, subsystem, piece of equipment, and component:

1. Fire.
2. Flood.
3. Gas leak.
4. Water leak.
5. Power failure.
6. Water outage.
7. System, subsystem, or equipment failure.
8. Chemical release or spill.

C. Emergency Instructions: Describe and explain warnings, trouble indications, error messages, and similar codes and signals. Include responsibilities of City's operating personnel for notification of Installer, supplier, and manufacturer to maintain warranties.

D. Emergency Procedures: Include the following, as applicable:

1. Instructions on stopping.
2. Shutdown instructions for each type of emergency.
3. Operating instructions for conditions outside normal operating limits.
4. Required sequences for electric or electronic systems.
5. Special operating instructions and procedures.

2.4 OPERATION MANUALS

A. Content: In addition to requirements in this Section, include operation data required in individual Specification Sections and the following information:

1. System, subsystem, and equipment descriptions.
2. Performance and design criteria if Contractor is delegated design responsibility.
3. Operating standards.

4. Operating procedures.
5. Operating logs.
6. Wiring diagrams.
7. Control diagrams.
8. Piped system diagrams.
9. Precautions against improper use.
10. License requirements including inspection and renewal dates.

B. Descriptions: Include the following:

1. Product name and model number.
2. Manufacturer's name.
3. Equipment identification with serial number of each component.
4. Equipment function.
5. Operating characteristics.
6. Limiting conditions.
7. Performance curves.
8. Engineering data and tests.
9. Complete nomenclature and number of replacement parts.

C. Operating Procedures: Include the following, as applicable:

1. Startup procedures.
2. Equipment or system break-in procedures.
3. Routine and normal operating instructions.
4. Regulation and control procedures.
5. Instructions on stopping.
6. Normal shutdown instructions.
7. Seasonal and weekend operating instructions.
8. Required sequences for electric or electronic systems.
9. Special operating instructions and procedures.

D. Systems and Equipment Controls: Describe the sequence of operation, and diagram controls as installed.

E. Piped Systems: Diagram piping as installed, and identify color-coding where required for identification.

2.5 PRODUCT MAINTENANCE MANUAL

A. Content: Organize manual into a separate section for each product, material, and finish. Include source information, product information, maintenance procedures, repair materials and sources, and warranties and bonds, as described below.

B. Source Information: List each product included in manual, identified by product name and arranged to match manual's table of contents. For each product, list name, address, and telephone number of Installer or supplier and maintenance service agent,

and cross-reference Specification Section number and title in Special Provisions and Technical Specifications (SPTS).

C. Product Information: Include the following, as applicable:

1. Product name and model number.
2. Manufacturer's name.
3. Color, pattern, and texture.
4. Material and chemical composition.
5. Reordering information for specially manufactured products.

D. Maintenance Procedures: Include manufacturer's written recommendations and the following:

1. Inspection procedures.
2. Types of cleaning agents to be used and methods of cleaning.
3. List of cleaning agents and methods of cleaning detrimental to product.
4. Schedule for routine cleaning and maintenance.
5. Repair instructions.

E. Repair Materials and Sources: Include lists of materials and local sources of materials and related services.

F. Warranties and Bonds: Include copies of warranties and bonds and lists of circumstances and conditions that would affect validity of warranties or bonds.

1. Include procedures to follow and required notifications for warranty claims.

2.6 SYSTEMS AND EQUIPMENT MAINTENANCE MANUAL

A. Content: For each system, subsystem, and piece of equipment not part of a system, include source information, manufacturers' maintenance documentation, maintenance procedures, maintenance and service schedules, spare parts list and source information, maintenance service contracts, and warranty and bond information, as described below.

B. Source Information: List each system, subsystem, and piece of equipment included in the manual, identified by product name and arranged to match manual's table of contents. For each product, list name, address, and telephone number of Installer or supplier and maintenance service agent, and cross-reference Specification Section number and title in Special Provisions and Technical Specifications (SPTS).

C. Manufacturers' Maintenance Documentation: Manufacturers' maintenance documentation including the following information for each component part or piece of equipment:

1. Standard printed maintenance instructions and bulletins.

2. Drawings, diagrams, and instructions required for maintenance, including disassembly and component removal, replacement, and assembly.
3. Identification and nomenclature of parts and components.
4. List of items recommended to be stocked as spare parts.

D. Maintenance Procedures: Include the following information and items that detail essential maintenance procedures:

1. Test and inspection instructions.
2. Troubleshooting guide.
3. Precautions against improper maintenance.
4. Disassembly; component removal, repair, and replacement; and reassembly instructions.
5. Aligning, adjusting, and checking instructions.
6. Demonstration and training videotape, if available.

E. Maintenance and Service Schedules: Include service and lubrication requirements, list of required lubricants for equipment, and separate schedules for preventive and routine maintenance and service with standard time allotment.

1. Scheduled Maintenance and Service: Tabulate actions for daily, weekly, monthly, quarterly, semiannual, and annual frequencies.
2. Maintenance and Service Record: Include manufacturers' forms for recording maintenance.

F. Spare Parts List and Source Information: Include lists of replacement and repair parts, with parts identified and cross-referenced to manufacturers' maintenance documentation and local sources of maintenance materials and related services.

G. Maintenance Service Contracts: Include copies of maintenance agreements with name and telephone number of service agent.

H. Warranties and Bonds: Include copies of warranties and bonds and lists of circumstances and conditions that would affect validity of warranties or bonds.

1. Include procedures to follow and required notifications for warranty claims.

PART 3 - EXECUTION

3.1 MANUAL PREPARATION

A. Operation and Maintenance Documentation Directory: Prepare a separate manual that provides an organized reference to emergency, operation, and maintenance manuals.

B. Emergency Manual: Assemble a complete set of emergency information indicating procedures for use by emergency personnel and by City's operating personnel for types of emergencies indicated.

C. Product Maintenance Manual: Assemble a complete set of maintenance data indicating care and maintenance of each product, material, and finish incorporated into the Work.

D. Operation and Maintenance Manuals: Assemble a complete set of operation and maintenance data indicating operation and maintenance of each system, subsystem, and piece of equipment not part of a system.

1. Engage a factory-authorized service representative to assemble and prepare information for each system, subsystem, and piece of equipment not part of a system.
2. Prepare a separate manual for each system and subsystem, in the form of an instructional manual for use by City's operating personnel.

E. Manufacturers' Data: Where manuals contain manufacturers' standard printed data, include only sheets pertinent to product or component installed. Mark each sheet to identify each product or component incorporated into the Work. If data include more than one item in a tabular format, identify each item using appropriate references from the Contract Documents. Identify data applicable to the Work and delete references to information not applicable.

1. Prepare supplementary text if manufacturers' standard printed data are not available and where the information is necessary for proper operation and maintenance of equipment or systems.

F. Drawings: Prepare drawings supplementing manufacturers' printed data to illustrate the relationship of component parts of equipment and systems and to illustrate control sequence and flow diagrams. Coordinate these drawings with information contained in Record Drawings to ensure correct illustration of completed installation.

1. Do not use original Project Record Documents as part of operation and maintenance manuals.
2. Comply with requirements of newly prepared Record Drawings in Division 1 Section "Project Record Documents."

G. Comply with Division 1 Section "Closeout Procedures" for the schedule for submitting operation and maintenance documentation.

END OF SECTION SM01782

SECTION SM01820 - DEMONSTRATION AND TRAINING

PART 1 - GENERAL

1.1 RELATED DOCUMENTS

A. Drawings, Addenda, General Conditions, Construction Contract and other Division 1 Specification Sections, apply to this Section.

1.2 SUMMARY

A. This Section includes administrative and procedural requirements for instructing City's personnel, including the following:

1. Demonstration of operation of systems, subsystems, and equipment.
2. Training in operation and maintenance of systems, subsystems, and equipment.

B. Related Sections include the following:

1. Division 1 Section "Allowances" for administrative and procedural requirements for demonstration and training allowances.
2. Division 1 Section "Project Management and Coordination" for requirements for preinstruction conferences.
3. Division 1 Section "Photographic Documentation" for preparing and submitting demonstration and training videotapes.

1.3 SUBMITTALS

A. Instruction Program: Submit two copies of outline of instructional program for demonstration and training, including a schedule of proposed dates, times, length of instruction time, and instructors' names for each training module. Include learning objective and outline for each training module.

1. At completion of training, submit one complete training manual for City's use.

B. Qualification Data: For firms and persons specified in "Quality Assurance" Article to demonstrate their capabilities and experience. Include lists of completed projects with project names and addresses, names and addresses of architects/engineers and Citys, and other information specified.

C. Attendance Record: For each training module, submit list of participants and length of instruction time.

D. Evaluations: For each participant and for each training module, submit results and documentation of performance-based test.

E. Demonstration and Training Videotape: Submit two copies at end of each training module.

1.4 QUALITY ASSURANCE

A. Facilitator Qualifications: A firm or individual experienced in training or educating maintenance personnel in a training program similar in content and extent to that indicated for this Project, and whose work has resulted in training or education with a record of successful learning performance.

B. Instructor Qualifications: A factory-authorized service representative, experienced in operation and maintenance procedures and training of manufacturer's products that are similar in material, design, and extent to those indicated for this project.

C. Preinstruction Conference: Conduct conference at Site to comply with requirements in Division 1 Section "Project Management and Coordination." Review methods and procedures related to demonstration and training including, but not limited to, the following:

1. Inspect and discuss locations and other facilities required for instruction.
2. Review and finalize instruction schedule and verify availability of educational materials, instructors' personnel, audiovisual equipment, and facilities needed to avoid delays.
3. Review required content of instruction.
4. For instruction that must occur outside, review weather and forecasted weather conditions and procedures to follow if conditions are unfavorable.

1.5 COORDINATION

A. Coordinate instruction schedule with City's operations. Adjust schedule as required to minimize disrupting City's operations.

B. Coordinate instructors, including providing notification of dates, times, length of instruction time, and course content.

C. Coordinate content of training modules with content of approved emergency, operation, and maintenance manuals. Do not submit instruction program until operation and maintenance data has been reviewed and approved by Architect.

PART 2 - PRODUCTS

2.1 INSTRUCTION PROGRAM

A. Program Structure: Develop an instruction program that includes individual training modules for each system and equipment not part of a system, as required by individual Specification Sections, and as follows:

1. Motorized doors, including overhead coiling doors and automatic entrance doors.
2. Equipment, including A/V equipment, projection screens
3. Fire-protection systems, including [fire alarm and fire-extinguishing systems
4. HVAC instrumentation and controls.
5. Lighting equipment and controls.
6. Communication systems, including paging system and voice and data equipment.
7. Access Flooring
8. Automated Book Return

B. Training Modules: Develop a learning objective and teaching outline for each module. Include a description of specific skills and knowledge that participant is expected to master. For each module, include instruction for the following:

1. Basis of System Design, Operational Requirements, and Criteria: Include the following:

    a. System, subsystem, and equipment descriptions.
    b. Performance and design criteria if Contractor is delegated design responsibility.
    c. Operating standards.
    d. Regulatory requirements.
    e. Equipment function.
    f. Operating characteristics.
    g. Limiting conditions.
    h. Performance curves.

2. Documentation: Review the following items in detail:

    a. Emergency manuals.
    b. Operations manuals.
    c. Maintenance manuals.
    d. Project Record Documents.
    e. Identification systems.
    f. Warranties and bonds.
    g. Maintenance service agreements and similar continuing commitments.

3. Emergencies: Include the following, as applicable:

    a. Instructions on meaning of warnings, trouble indications, and error messages.
    b. Instructions on stopping.
    c. Shutdown instructions for each type of emergency.
    d. Operating instructions for conditions outside of normal operating limits.

e. Sequences for electric or electronic systems.
f. Special operating instructions and procedures.

4. Operations: Include the following, as applicable:

a. Startup procedures.
b. Equipment or system break-in procedures.
c. Routine and normal operating instructions.
d. Regulation and control procedures.
e. Control sequences.
f. Safety procedures.
g. Instructions on stopping.
h. Normal shutdown instructions.
i. Operating procedures for emergencies.
j. Operating procedures for system, subsystem, or equipment failure.
k. Seasonal and weekend operating instructions.
l. Required sequences for electric or electronic systems.
m. Special operating instructions and procedures.

5. Adjustments: Include the following:

a. Alignments.
b. Checking adjustments.
c. Noise and vibration adjustments.
d. Economy and efficiency adjustments.

6. Troubleshooting: Include the following:

a. Diagnostic instructions.
b. Test and inspection procedures.

7. Maintenance: Include the following:

a. Inspection procedures.
b. Types of cleaning agents to be used and methods of cleaning.
c. List of cleaning agents and methods of cleaning detrimental to product.
d. Procedures for routine cleaning
e. Procedures for preventive maintenance.
f. Procedures for routine maintenance.
g. Instruction on use of special tools.

8. Repairs: Include the following:

a. Diagnosis instructions.
b. Repair instructions.
c. Disassembly; component removal, repair, and replacement; and reassembly instructions.
d. Instructions for identifying parts and components.

e. Review of spare parts needed for operation and maintenance.

PART 3 - EXECUTION

3.1 PREPARATION

A. Assemble educational materials necessary for instruction, including documentation and training module. Assemble training modules into a combined training manual.

B. Set up instructional equipment at instruction location.

3.2 INSTRUCTION

A. Facilitator: Engage a qualified facilitator to prepare instruction program and training modules, to coordinate instructors, and to coordinate between Contractor and City for number of participants, instruction times, and location.

B. Engage qualified instructors to instruct City's personnel to adjust, operate, and maintain systems, subsystems, and equipment not part of a system.
   1. City will furnish Contractor with names and positions of participants.

C. Scheduling: Provide instruction at mutually agreed on times. For equipment that requires seasonal operation, provide similar instruction at start of each season.

   1. Schedule training with City with at least seven days' advance notice.

   2. At beginning of each training module, record each chart containing learning objective and lesson outline.

END OF SECTION SM01820

SECTION 03 10 00 - CONCRETE FORWORK

PART 1 - GENERAL

1.1 GENERAL

A. Work of this Section shall conform to requirements of Drawings and general provisions of the Contract, including General and Supplementary Conditions and Division 1 Specification sections

1.2 SCOPE

A. Provide all labor, materials, equipment, services and transportation for formwork and related accessories required to complete all cast-in-place concrete work and the installation of embedded items as shown on Drawings, as specified herein, and as required by the job conditions.

1.3 RELATED WORK SPECIFIED IN OTHER SECTIONS

A.	Submittals	Division 1
B.	Quality Control	Division 1
C.	Thermal and Moisture Protection	Division 7
D.	Concrete Reinforcement and Embedded Assemblies	Section 03 20 00
E.	Cast-in-Place Concrete	Section 03 30 00
F.	Sustainable Design Requirements	Division 1
~~. “SUSTAINABLE DESIGN REQUIREMENTS”: LEED Requirements~~		~~Section 01 81 13~~

~~1.6~~1.4 CODES, STANDARDS AND REFERENCES

A. Building Code: Concrete work shall conform to the requirements of the Building Code identified on the Structural General Notes, and OSHA requirements, except where more stringent conditions or criteria occur in the standards referenced below and on the drawings.

B. Standards:

1. ACI 117 – Standard Specifications for Tolerances for Concrete Construction and Materials.
2. ACI 301 – Standard Specification for Structural Concrete.
3. ACI 318 – Building Code Requirements for Reinforced Concrete.
4. ACI 347 – Guide to Formwork for Concrete.
5. ACI 347.2R – Guide for Shoring/Reshoring of Concrete Multistory Buildings

C. References:

1. US Green Building Council (USGBC), www.usgbc.org

D. Definitions:

1. The term “Contract Documents” in this specification is defined as the design drawings and the specifications.
2. The term “SER” in this specification is defined as the Structural Engineer of Record for the structure in its final condition.
3. The term “Design Professionals” in this specification is defined as the Owner’s Architect and SER.

4. The term “Contractor” in this specification is defined to include any of the following: General Contractor and their sub-contractors, Construction Manager, Concrete Contractor and their sub-contractors.
5. The term “Owner Testing Agency” in this specification is defined as an independent testing and inspection service engaged by the Owner for quality assurance observation and testing of concrete construction in accordance with applicable building code provisions and any additional activities listed in the Contract Documents.
6. The terms “for record” and “submit for record” in this specification are defined as Contractor submittals that do not require a response from the Design Professionals.
7. Working Days: Monday through Friday, excluding federal or state holidays.

~~1.7~~1.5 QUALITY ASSURANCE

A. Design Criteria: Formwork shall conform to American Concrete Institute’s “Recommended Practice for Concrete Formwork” (ACI 347).
B. Formwork:

   a. Shall prevent leakage or washing out of cement mortar.
   b. Shall resist spread, shifting, and settling.
   c. Shall reproduce accurately required lines, grades, and surfaces within tolerances specified.

   2. Safety: The Contractor shall be responsible for adequate strength and safety of all formwork including falsework and shoring.

~~1.8~~1.6 CONTRACTOR QUALIFICATIONS

A. The work of this section shall be performed by a company which specializes in the type of concrete formwork required for this Project, with a minimum of 10 years of documented successful experience and shall be performed by skilled workers thoroughly experienced in the necessary crafts.

   1. Work shall be performed in compliance with Owner's insurance underwriters' requirements.

B. Contractor’s Testing Laboratory Services: Required as specified in Division 1, and herein.
C. Materials and installed work may require testing and retesting at anytime during progress of work, as directed by Design Professionals. Tests, including retesting of rejected materials for installed work will be done at Contractor's expense.

~~1.9~~1.7 SUBMITTALS

A. Where the SUBMITTALS section of this specification is in conflict with Division 1 Submittals, the more stringent requirements for the Contractor apply. Do not submit items not requested.

   1. Submittal Schedule: See Section 03 30 00.
   2. Formwork Shop Drawings:

      a. Submit for Record: Formwork shop drawings sealed and signed by a registered design professional licensed to practice as a Professional Engineer in the state where the project is located. Shop drawings shall clearly indicate but not be limited to the following:

         1) Size, type and quality of form materials including conditions at tops and ends of walls. (If wood is used, indicate species.)

2) Form construction indicating structural stability and jointing including special form joints or reveals required by Contract Documents
3) Location and pattern of form tie placement, and other items that affect the appearance of concrete that will remain exposed to view.
4) Form finish clearly indicating proper locations and full coordination with concrete finishes required by Contract Documents.
5) Layout, procedures, and sequencing of shoring and reshoring that correlates with the information contained in the shoring/reshoring calculations described below.
6) Comprehensive (a single drawing per area/element) layout drawings showing openings in structural members, including floor slab, shearwalls, columns and beams. Drawings shall consolidate the work of all trades and shall be coordinated by the Contractor. Submit with or prior to reinforcement submittal for same element/area.

b. Submit for Review

a) Location of proposed construction joints in walls, floors, slabs, beams per specification Section 03 30 00.

3. Shoring/Reshoring Calculations: Submit for Record. Calculations sealed and signed by a registered design professional licensed to practice as a Professional Engineer in the state where the project is located. Calculations shall clearly address but not be limited to the following:

a. Shoring removal and reshoring installation procedure including timing and sequencing.
b. Concrete age and strength at the time of each shoring/reshoring operation.
c. Description of construction loads assumed including concrete, formwork, and construction live load in accordance with ACI 347.
d. A description of the distribution of construction loads between the shored/reshored levels.
e. The total construction load imposed on all levels supporting shoring/reshoring at each stage of the shoring/reshoring cycle.
f. A written statement by the Professional Engineer that the total construction load imposed on any level supporting shoring/reshoring, at all stages of the shoring/reshoring cycle, accounting for concrete age and relative strength at time of loading, meets the requirement of Section 3.2.

4. Product Data - Submit copies of manufacturers' product data and installation instructions for proprietary materials used in exposed concrete work, including form liners, release agents, manufactured form systems, ties, and accessories.
5. Samples - At request of Architect, submit samples of form ties and spreaders
6. Compatibility Certification - Submit for record a written statement certifying that form release agent used is compatible with subsequent architectural finish materials applied to concrete surfaces. Submit along with manufacturer's data.
7. Asbestos and PCB Certification: Submit for record. After completion of installation, but prior to Substantial Completion, Contractor shall certify in writing that products and materials installed, and processes used, do not contain asbestos or polychlorinated biphenyls (PCB), using format in General Conditions.
8. Hazardous Materials Notification: Submit for record. In the event no product or material is available that does not contain hazardous materials as determined by the Owner, a "Material Safety Data Sheet" (MSDS) equivalent to OSHA Form 20 shall be submitted for that proposed product or material prior to installation.

B. Submittal Process: See Section 03 30 00
C. SER Submittal Review: See Section 03 30 00

D. Substitution Request: See Section 03 30 00
E. Request for Information (RFI): See Section 03 30 00
F. LEED certification data as specified in Division 1, Section 01 81 13, "Sustainable Design Requirements", for the following LEED credits:

1. Credit MR 4.1 & 4.2, Recycled Content
2. Credit MR 5.1 & 5.2, Regional Materials, Manufactured and Harvested / Extracted Locally

~~1.10~~1.8 FORMWORK DESIGN

A. Design of Formwork, Shoring/Reshoring, and its removal is the Contractor's responsibility.
B. Design, erect, support, brace and maintain formwork so that it will safely support vertical and lateral loads per SEI/ASCE 37-02 that might be applied, until such loads can be supported by the concrete structure.
C. Design Requirements:

1. Forms shall be designed for fabrication and erection in accordance with Design Professionals' requirements and recommendations of ACI 301, 318 and 347.
2. Design formwork in a manner such that the total construction load does not at any time exceed the total design load of new or existing construction and accounts for concrete age and relative strength at time of loading. See Section 3.2 for shoring/reshoring requirements.
3. Design formwork for loads and lateral pressures outlined in Section 2.2, ACI 347, and wind and seismic loads as specified by SEI/ASCE 37-02 unless otherwise controlled by local building code.
4. Design formwork to include loads imposed during construction, including weight of construction equipment, concrete mix, height of concrete drop, rate of filling of formwork, vibrator frequency, ambient temperature, foundation pressures, lateral stability, temporary imbalance or discontinuity of building components, and other factors pertinent to safety of structure during construction.

~~1.11~~1.9 DELIVERY, HANDLING, STORAGE

A. Comply with General Conditions and Division 1, including the following:

1. Store forms and form materials clear of ground and protect from damage.
2. Deliver and store packaged materials in original containers with seals unbroken and labels intact until time of use.

~~1.12~~1.10 JOB CONDITIONS

A. Sequencing Schedule:

1. Ensure timely delivery of embedded items. Be responsible for cutting and patching necessitated by failure to place embedded items.
2. Plan erection and removal to permit proper sequence of concrete placing without damage to concrete.

~~1.13~~1.11 WARRANTY

A. Comply with General Conditions, agreeing to repair or replace specified materials or Work that has failed within the warranty period. Failures include but are not limited to the following:

1. Discoloration of concrete scheduled to remain exposed to view.
2. Damage of concrete finishes caused by forms.
3. Damage of concrete caused by form stripping.

4. Non-compliance with form finishes required for designated architectural finishes.
5. Non-compatibility of form release agent with subsequent architectural finish materials applied to concrete surfaces.
6. Excessive and/or noticeable bowing in placed concrete members caused by deflection of formwork during concrete placement.

~~**2.0** LEED REQUIREMENTS~~

~~. See Division 1 Section "LEED Requirements" for additional LEED requirements.~~
~~. LEED Submittals~~

~~0. LEED Submittal Credit MR7.0: Letter of Certification(s) for Sustainable Forestry for wood formwork – Submit for Record:~~

~~. Forest Stewardship Council (FSC): Provide letter of certification signed by lumber supplier. Indicate compliance with FSC "Principles for Natural Forest Management" and identify certifying organization.~~

~~0) Submit FSC certification numbers; identify each certified product on a line-item basis.~~
~~0) Submit copies of invoices bearing the FSC certification numbers.~~

~~. Sustainable Forestry Board: Provide letter of certification signed by lumber supplier. Indicate compliance with the Sustainable Forestry Board's "Sustainable Forestry Initiative" (SFI) and identify certifying organization.~~

~~0) Submit SFI certification numbers; identify each certified product on a line-item basis.~~
~~0) Submit copies of invoices bearing the SFI certification numbers.~~

~~. Canadian Standards Association (CSA): Provide letter of certification signed by lumber supplier. Indicate compliance with the CSA and identify certifying organization.~~

~~0) Submit CSA certification numbers; identify each certified product on a line-item basis.~~
~~0) Submit copies of invoices bearing the CSA certification numbers.~~

~~. Indicate total cost for all wood.~~

~~0. LEED Submittal Credit Credit EQ 4.2: VOC~~

~~. Submit Product Data and material safety data sheets stating compliance with VOC limits. Refer to Section 01 35 20/LEED Requirements for additional requirements.~~

~~PART 18 -~~ PART 2 - PRODUCTS

~~18.1~~2.1 ACCEPTABLE MANUFACTURERS

A. Products of the manufacturers specified in this section establish the minimum functional, aesthetic and quality standards required for work of this section.
B. Substitutions: Comply with General Conditions using form in Division 1.

~~18.2~~2.2 FORMWORK REQUIREMENTS

A. General Requirements:

1. Formwork shall meet construction safety regulations for locality in which this Project is located.
2. Forms shall be removable without impact, shock or damage to concrete surfaces, the structure and adjacent materials.
3. Forms shall be tight-fitting, designed and fabricated for required finishes and to withstand concrete weight and maintain tolerances as specified in ACI 117 for the following designations: (See architectural drawings for locations).

    a. Class A – For surfaces prominently exposed to public view where appearance is of special importance.
    b. Class B – Coarse-textured concrete-formed surfaces intended to receive plaster, stucco or wainscoting.
    c. Class C – General Standard for permanently exposed surfaces where other finishes are not specified.
    d. Class D - Minimum quality surface where roughness is not objectionable, usually applied where surfaces will be concealed.

4. Furnish forms in largest practicable sizes to minimize number of joints and to conform to joint system shown on drawings, using form materials with sufficient thickness to withstand pressure of newly-placed concrete without bow or deflection.
5. Butt Joints: Shall be solid and complete with backup material to prevent leakage of cement paste.

B. Form Finishes for Exposed Surfaces:

1. Type: Straight, smooth, free of cement paste leaks at butt-joints, surface imperfections and other irregularities detrimental to appearance of finished concrete, fully coordinated with requirements for required finish material.
2. Form exposed areas of columns, beams, ledges, balcony fascias to achieve true alignment and level soffit of spandrel beams and concrete edges. All such areas must be sharp, straight and true to line and level. Spandrel beams and concrete canopies and ledges must have adequate shoring to prevent any visible amount of sag and sufficient bracing to prevent any lateral movement during construction.

~~18.3~~2.3 FORM MATERIALS

A. General: Plywood, fiberglass, metal, metal-framed plywood faced, or other acceptable panel-type materials.

1. Provide materials with sufficient strength to prevent warping.

B. Plywood: Of species and grade suitable for intended use, sound undamaged sheets with clean true edges.

1. Panel Forms: Minimum 5/8-inch thick exterior grade plywood with sealed edges, United States Voluntary Product Standard for Construction and Industrial Plywood (PS1) grade Plyform Class I and II B-B Exterior or HDO Exterior.
2. Board Forms: Shiplap or tongue and groove lined with PS 1 grade Plyform Class I and II Exterior ½-inch or HDO Exterior ½-inch or 3/16-inch thick fiberboard conforming to FS LLL-B-810a(1), type I.
3. Other Acceptable Sheet Materials: 14 gauge sheet steel or fibrous glass reinforced resin.

C. Forms for Exposed Finish Concrete: Plywood, metal, metal-framed plywood faced, or other acceptable panel-type materials, to provide continuous, straight, smooth, exposed surfaces. Furnish in largest practicable sizes to minimize number of joints and to conform to joint system shown on Drawings.

D. Lumber: Construction grade or better Douglas Fir without loose knots for other defects.

~~1.~~ Use only where entire width can be covered with one board 11-1/4" or less in width.~~.~~

~~D. Forms for Cylindrical Columns and Supports: Metal, glass-fiber reinforced plastic, or paper or fiber tubes that will produce smooth surfaces without joint indications.~~

~~3. Provide units with sufficient wall thickness to resist wet concrete loads without deformation.~~

~~4. Columns Forms: SONOTUBE or equal product substituted per Section 01 25 00, and as required for other configurations~~

~~D. Pan-Type Forms: Glass-fiber-reinforced plastic or formed steel, stiffened to support weight of placed concrete without deformation.~~

~~6.~~1. ~~Pan Joist forms: Provide removable forms, Ceco Corporation or equal. Forms shall have adequate strength to maintain their shape during placing of concrete and shall permit easy removal without damage to concrete surfaces. Forms shall be true to shape, free from bulges, tears or other damage, and shall be free from oil, grease, paint, dirt or other deleterious coatings. Forms shall fit close, tight and straight. Forms shall be cleaned up before reuse.~~

E. Chamfer for Form Corners:

1. Types: Chamfer strips of wood, metal, PVC or rubber fabricated to produce smooth form lines and tight edge joints, 3/4" size, maximum possible lengths.
2. Required for all exposed corners of beam, walls and column forms.

F. Form Ties:

1. Type: Factory-fabricated metal, adjustable length, designed to prevent form deflection and to prevent spalling concrete upon removal.
2. Ties used for architecturally exposed concrete shall be galvanized.
3. Ties shall not leave metal closer than 1-1/2" to exposed surface.
4. When removed, ties shall not leave holes larger than 1" diameter in concrete surface. Ties shall not leave fractures, spalls, depressions, or other surface disfigurations greater than ¾-inch.
5. Removable Ties: Use type with tapered cones, 1" outside diameter, for concrete walls which will remain exposed to view and scheduled for architectural finishes.
6. Snap-Off Ties: Use for concrete walls below grade and walls which will not remain exposed to view and are not scheduled for architectural finishes.
7. Wire Ties: Not acceptable.

G. Nails, Spikes, Lag Bolts, Thru-Bolts, Anchorages:

1. Type: Of size, strength and quality to meet the required quality of formwork.

H. Expansion Joint Filler:

1. Fiber Type: Premolded asphalt-impregnated fiber, ASTM D1751, 1/4-inch thick unless otherwise noted. Same as W. R. Meadows, Inc.'s "Sealtight Fiber Expansion Joint"; Grace Construction Materials "Serviced Fiber Expansion Joint Filler, Code 1390"; National Expansion Joint Co.'s "Fiber Joint Filler No. 12"; Burke Concrete Accessories, Inc.'s "Burke Fiber Expansion Joint"; or equal product substituted per Section 01 25 00.
2. Cork Type: Preformed cork, ASTM D1752, Type II, 1/4-inch size unless otherwise noted. Same as W. R. Meadows, Inc.'s "Sealtight Cork Expansion Joint"; Sonneborn-Contech's "Sonoflex Cork"; Grace Construction Materials' "Serviced Standard Cork Expansion Joint Filler, Code 4323; or equal product substituted per Section 01 25 00.

I. Form Sealer: Same as Grace Construction Material's "Formfilm"; or equal product substituted per Section 01 25 00.

J. Form Release Agent:

1. Type: Commercial formulation form release agent of non-emulsifiable type which will not bond with, stain, or adversely affect concrete surfaces. Form release agent shall not impair subsequent treatment of concrete surfaces requiring bond or adhesion, or impede the wetting of surfaces to be cured with water or curing compounds. Form release agent shall be compatible with subsequent architectural finish materials applied to concrete surfaces. Apply in compliance with manufacturers' instructions.
2. Form release agent shall meet, at a minimum, all federal and state requirements for volatile organic compounds (VOC's).
3. ~~In compliance with LEED Credit EQ 4.2, a~~Acceptable products include but are not limited to:

   a. "Bio-Form," Leahy-Wolf Company, Franklin, IL
   b. "Enviroform," Conspec Marketing and Manufacturing Co., Inc., Kansas City, KS
   c. "Soy Form Away," Natural Soy Products, Watkins, IA
   d. "Soy Form Away," Midwest Biologicals, Inc., Woodburn, IN

~~4.~~ For Steel Forms: Non-staining rust-preventative type~~.~~
~~5.~~4. ~~Foam Board: Extruded close cell polystyrene foam, channeled for drainage, with a minimum compressive strength of 60 psi at 0.1-inch deformation when tested in accordance with ASTM D1621-73, and meeting requirements of FS-HH-I-524b, Type II, Class B. Same as The Dow Chemical Co.'s "Styroform Plazamate" or equal product substituted per Section 01 25 00~~.

K. Reglets: Provide sheet metal reglets formed of same type and gauge as flashing metal, unless indicated otherwise on Drawings. Where resilient or elastomeric sheet flashing, or bituminous membranes are terminated in reglets, provide reglets of not less than 26 gauge galvanized sheet metal. Fill reglet or cover face opening to prevent intrusion of concrete or debris.

L. Coordinate with materials as specified in Section 03 20 00: Concrete Reinforcement and Embedded Assemblies.

~~. Form Liners: Where indicated, line forms with Dayton Superior 6 inches "Cedar Form Liner." or equal provided in as long length as are available from the manufacturer. Install liner with tight joints, sealed when recommended by the liner manufacturer, so that when cast and de-formed, the concrete will match the approved mockup.~~

~~18.5~~2.4 SOURCE QUALITY CONTROL

A. Plywood shall bear American Plywood Association's "Guide to Plywood Grades" (APA) grade-trademark.

~~PART 19 -~~ PART 3 - EXECUTION

~~19.1~~3.1 FORMWORK

A. General:

1. Inspect areas to receive formwork.

   a. Immediately report to Owner's Testing Agency and Design Professionals in writing the conditions that will adversely affect the Work.

b. Verify that excavations are sufficient to permit placement, inspection and removal of forms.
c. Verify that excavations for earth forms have been neatly and accurantely cut.
d. Verify that conditions are otherwise propoer for formwork construction.

2. Do not start work until unsatisfactory conditions have been corrected.
3. Construct forms to sizes, shapes, lines, and dimensions shown on Contract Documents, and to obtain accurate alignment, location, grades, level and plumb work in finished structures.
4. Provide formwork sufficiently tight to prevent leakage of cement paste during concrete placement. Solidly butt joints and provide backup material at joints as required to prevent leakage and fins, and to maintain alignment.
5. Provide for openings, offsets, sinkages, keyways, recesses, moldings, rustications, reglets, drips, bevels, chamfers, blocking, screeds, bulkheads, anchorages and inserts and other features required in the Work.
6. Comply with shop drawings, ACI 301, 318, 347 and Contract Documents.
7. Maintain formwork and finished work construction tolerances complying with ACI 301, 117, and 347.
8. ~~Provide shore and struts with positive means of adjustment capable of taking up formwork settlement during concrete placing operations, using wedges or jacks or a combination thereof.~~
9. ~~9.~~8. Erect forms for easy removal without hammering or prying against concrete surfaces.
10. ~~10.~~9. Provide crush plates or wrecking plates where stripping may damage cast concrete surfaces.
11. ~~11.~~10. Provide top forms for inclined surfaces where slope is too steep to place concrete with bottom forms only.
12. ~~12.~~11. Kerf wood inserts for forming keyways, reglets, recesses, and the like, to prevent swelling and for easy removal.
13. ~~13.~~12. Chamfer exposed corners and edges as indicated, using wood, metal, PVC or rubber chamfer strips fabricated to produce smooth lines and tight edge joints.
14. ~~14.~~13. Design, erect, support, brace and maintain formwork and shoring to support loads until such loads can be safely supported by the concrete structure.
15. ~~15.~~14. Where specifically shown on the Contract Documents as monolithic, upturned beams, curbs and similar members in connection with slabs shall be formed so that they can be poured integrally with slabs.

B. Walls and Other Formed Elements:

1. Erect outside forms for exposed exterior walls first and obtain the Architect's approval before reinforcement is placed. Obtain Architect's approval of the reinforcement before interior form is erected.
2. Carefully align inside and outside forms before tightening ties.
3. Plywood Forms: Insure vertical joints are plumb and horizontal joints are level; arrange joints and ties in geometrical pattern as approved by the Architect.
4. Form inside corners at exposed conditions with mitered boards or plywood so that no concrete is placed against form ends.
5. After erection, seal all cracks, holes, slits, gaps, and apertures in forms so that they will withstand the pressure and will remain completely watertight.
6. Provide a means to seal the bottom of forms at construction joints such as foam tape or other gasket devices.
7. Apply a coating of release agent prior to the erection of formwork. Follow approved manufacturer's recommendations.
   Board-formed concrete: Where board-formed concrete is indicated, line the forms with rough sawn 2 by 6 boards with tight joints. Nail the boards securely to the forms using finishing nails. Brace the forms externally; do not use form ties.

C. Formwork Loads on Grade

1. Where loads from formwork bear on grade, provide suitable load-spreading devices for adequate support and to minimize settlement. In no event shall frozen ground or soft ground be utilized directly as the supporting medium.

D. Earth Forms:

1. Construct wood edge strips at top sides of excavations.
2. Provide forms for footings wherever concrete cannot be placed against solid earth excavation.
3. Remove loose dirt and debris prior to concrete pours.
4. Foundation concrete may be placed directly into neat excavations provided the foundation trench walls are stable as determined by the Architect (Structural Engineer), subject to the approval of the Geotechnical Engineer.

    a. The horizontal dimensions of unformed concrete footings shall be increased 1 inch at every surface at which concrete is placed directly against the soil.
    b. The minimum formwork shown on the drawings is mandatory to ensure clean excavations immediately prior to and during the placing of concrete.

E. Footings and Grade Beams:

1. Provide forms for footings and grade beams if soil or other conditions are such that earth trench forms are unsuitable.
2. When trench forms are used, provide an additional 1” of concrete on each side of the minimum design profiles and dimensions indicated.

F. Slab Forms:

1. Establish levels and set screeds.
2. Depress slabs where required to receive special floor finishes.

G. For slabs-on-grade, secure edge forms in such a manner as to not move under weight of construction loads, construction and finishing equipment, or workers

H. Concrete Accessories and Embedded Items:

1. Obtain necessary information for coordination of formwork with items to be embedded in concrete and other relate work.
2. Install into forms concrete accessories, sleeves, inserts, anchor bolts, anchorage devices and other miscellaneous embedded items furnished by other trades or that are required for other work that is attached to or supported by cast-in-place concrete.

    a. Use setting drawings, diagrams, instructions and directions provided by suppliers of items to be attached.

3. Install reglets to receive top edge of foundation sheet waterproofing and to receive through-wall flashings in outer face of concrete frame at exterior walls, where flashing is shown at lintels, relieving angles, and other conditions.
4. Install dovetail anchor slots in concrete structures as indicated on drawings or required by other trades.
5. Forms for Slabs: Set edge forms, bulkheads, and intermediate screed strips for slabs to achieve required elevations and contours in finished surfaces.
6. Coordinate with Section 03 20 00 Concrete Reinforcement and Embedded Assemblies.
7. Install accessories and embedded items straight, level, plumb and secure in place to prevent displacement by concrete placement.
8. Use templates to ensure accurate placement of anchor bolts, inserst,a nd other embedded items.

I. Temporary Openings:

1. Locate temporary openings in forms at inconspicuous locations.
2. For clean-outs and inspection before concrete placement, locate temporary openings where interior area of formwork would otherwise be inaccessible.
3. For cleaning and inspections, locate openings at bottom of forms to allow flushing water to drain.
4. Securely brace temporary openings and set tightly in forms to prevent loss of concrete.
5. Close temporary openings with tight fitting panels, flush with inside face of forms, neatly fitted so that joints will not be noticeable on exposed concrete surfaces.

J. Provisions for Other Trades: Coordinate and provide openings in concrete formwork to accommodate work of other trades.

1. Determine size and location of openings, recesses, chases, offsets, openings, depressions, and curbs from information provided by trades requiring such items.
2. Accurately place and securely support items built into forms.

K. Cleaning:

1. Normal Conditions

   a. Thoroughly clean forms and adjacent surfaces to receive concrete.
   b. Remove chips, wood, sawdust, dirt, standing water or other debris just before placing concrete.
   c. Flush with water or use compressed air to remove remaining foreign matter.
   d. Verify that water and debris can drain from forms through clean-out ports.

2. During Cold Weather:

   a. Remove ice and snow from within forms.
   b. Do not use de-icing salts.
   c. Do not use water to clean out completed forms, unless formwork and concrete construction will proceed within heated enclosure.
   d. Use compressed air or other means to remove foreign matter.

L. Form Release Agents

1. Before placing reinforcing steel and miscellaneous embedded items, coat contact surfaces of forms with an approved non-residual, low VOC form release agent in accordance with manufacturer's published instructions.
2. Do not allow release agent to accumulate in forms or come into contact with reinforcement or concrete against which fresh concrete will be placed.

   a. Coat steel forms with nonstaining, rust-preventative material.

3. Remove form release agent and residue from reinforcement or surfaces not requiring form coating.

M. Before Placing Concrete:

1. Inspect and check completed formwork, shoring and bracing to ensure that work is in accordance with formwork requirements of this section and Contract Documents, and that supports, fastenings, wedges, ties, and parts are secure.

   a. Make necessary corrections or adjustment to formwork to meet tolerance requirements.

2. Retighten forms and bracing before concrete placement to prevent mortar leaks and maintain proper alignment.
3. Notify Owner's Testing Laboratory sufficiently in advance of placement of concrete to allow inspection of completed and cleaned forms.

N. During Concrete Placement:

1. Maintain a check on formwork to ensure that forms, shoring, ties and other parts of formwork have not been disturbed by concrete placement methods or equipment.
2. Use positive means of adjustment as required for formwork settlement during concrete placing operations.

O. Camber:

1. Provide camber in formwork as required for anticipated deflections due to weight and pressures of fresh concrete and construction loads.
2. Camber bottom forms where indicated on the drawings. Whenever forms are cambered, screeded levels for establishing top of concrete must be cambered to the same amount and to the same profiles such that scheduled depth of member is not reduced by lifting of forms. Check camber and adjust forms before initial set as required to maintain camber.

P. Expansion Joints:

1. Provide in exterior concrete paving on grade at maximum 24-feet on center or as noted and at intersections with vertical surfaces, curbs, manholes or other penetrations through paving.
2. Use fiber type expansion joint fillers typically and depress 1/4-inch unless otherwise noted.
3. Use cork type expansion joint fillers at conditions with non-bituminous waterproofing, liquid waterproofing or sealant systems

Q. Construction Joints:

1. Provide where shown on the drawings as directed by the Architect and per CBC Section 1906.4.
2. Provide key indentations at all joints.
3. Provide pour strips on inside face of forms at horizontal joints, but remove strips and thoroughly clean out reglets before placing subsequent portions of wall.
4. Prevent formations of shoulders and ledges.
5. Provide means for drawing forms into firm contact with concrete before placing additional concrete over previous pours where shrinking and warping has separated concrete from forms.

R. Surface Defects:

1. Install forms substantially free of surface defects.

~~19.2~~3.2 SHORES AND RESHORES

A. Comply with ACI 347.2R for shoring and reshoring in multistory construction, and as specified herein.

1. For non-post tensioned flat plate concrete structures of five supported levels or more, extend shoring/reshoring at least four levels below the floor or roof being placed (shore formwork, reshore three levels below)
2. For non-post tensioned flat plate concrete structures of less than five supported levels, extend shoring/reshoring to ground.

3. For all other concrete structures of four supported levels or more, extend shoring/reshoring at least three levels below the floor or roof being placed (shore formwork, reshore two levels below)
4. For all other concrete structures of less than four supported levels, extend shoring/reshoring to ground.
5. For shoring/reshoring placed on mud sills, adjustments shall be made by contractor to account for ground settlement.
6. Locate shores/reshores such that the factored (ultimate) construction load imposed onto any slab or beam at any time during the construction cycle does not exceed 90% of the factored (ultimate) design load for that slab or beam, scaled down to reflect effect on capacity of lower concrete strength at time of loading.
7. Construction load shall include the weight of wet concrete, total weight of formwork and shoring/reshoring, and a minimum construction live load of 50 psf (increase if construction operations will produce higher loading). Design load includes self weight of the slab, and superimposed dead and live loads as indicated on the drawings.
8. For comparison of construction loads to design loads, compare factored (ultimate) construction loads to factored (ultimate) design loads. Use the same load factors for the construction load that were used for the design of the slabs.
9. For flat plate or flat slab construction “backshores” or “preshores” as defined in ACI 347 shall be permitted only if appropriate calculations and construction sequences are provided demonstrating that the accumulation of shore loads will not overload any slab. In the absence of such calculations and construction sequences, shores must be removed and reshores installed in a sequence such that each floor is permitted to deflect and carry its own weight prior to the installation of reshores.
10. Reshores shall not be removed until the concrete has attained its specified 28 day strength.
11. Two levels of shoring or one level of shores over one level of reshores shall be maintained below any newly cast level until it has attained design strength and is at least 28-days old.

B. General

1. Adequately brace and maintain shoring to safely support vertical, lateral, and asymmetrical loads until completed structure has attained design strength.
2. Distribute shoring loads over area where shoring is erected and protect against undermining or settlement.
3. Provide means for making vertical adjustments to compensate for settlement either before or during placing of concrete.
4. Construct shores for soffits of beams to permit removal of forms without removing shores.
5. Reshoring will be permitted. Shores and reshores shall be designed by a Civil Engineer registered in the State of California and installed under his/her direction. This Civil Engineer shall be employed by the Contractor.

~~19.3~~3.3 REMOVING FORMS

A. Secure the Architect’s approval for time and sequence of form removal.
B. Formwork not supporting weight of concrete, such as sides of beams, walls, columns, and similar parts of the work, may be removed after cumulatively curing at not less than 50°F (10°C) for 12 hours after placing concrete, provided concrete is sufficiently hard to avoid damage by form-removal operations, and provided curing and protection operations are maintained after removal of formwork.
C. Formwork supporting weight of concrete, such as beam soffits, joists, slabs, and other structural elements, may not be removed until concrete has attained at least 75% of design compressive strength as proven by cylinder test . If stripping occurs before [3] days, 100% strength must be achieved.

1. Results of the cylinder break shall be presented to the Architect to demonstrate compliance with above specified strength requirements prior to form removal.
2. Provide reshores as required per ACI 347.
3. Determine potential compressive strength of in-place concrete by testing field-cured specimens representative of concrete location or members

D. Remove formwork progressively using methods to prevent shock loads or unbalanced loads from being imposed on structure. Forms shall be removed without damage to the concrete. Comply with ACI 347.
E. Loosen forms carefully. Do not wedge pry bars, hammers, or tools against concrete surfaces.
F. Reshore structural members where required due to design requirements, construction requirements, or construction conditions.

1. Reshore on same day shoring and forms are removed.

G. Whenever formwork is removed during the curing period, the exposed concrete shall be cured per requirements of Section 03 30 00.
H. All wood formwork, including that used in void spaces, pockets and other similar places shall be removed.
I. Form tie holes shall be filled as per approved samples submitted to the Architect and Engineer.
J. The Contractor shall assume responsibility for all damage due to removal of the forms.

~~19.4~~3.4 RE-USING FORMS

A. Before forms can be re-used, surfaces that will be in contact with freshly poured concrete must be thoroughly cleaned, damaged areas repaired, projecting nails withdrawn, and forms must be straight and free from dirt or hardened concrete.

1. Split, frayed, delaminated or otherwise damaged form-facing material will not be acceptable.
2. Apply new form release agent on re-used forms.

B. When forms are extended for successive concrete placement, thoroughly clean surfaces, remove fins and laitance, and tighten forms to close joints. Align and secure joints to avoid offsets. Reuse of formwork with repairs or patches which would result in adverse effects to architectural concrete finish will not be permitted.
C. Forms for exposed concrete may be reused only if the surfaces have not absorbed moisture and have not splintered, warped, discolored, stained, rusted or peeled, subject to acceptance by the Design Professionals. The Design Professionals reserve the right to require the Contractor to remove and reconstruct such formwork as will produce subsequent areas that are acceptable. Do not use "patched" forms for exposed concrete surfaces, unless approved by the Design Professionals.
D. Clean and repair any damage caused by placing, removal, or storage.
E. Store formwork in manner to prevent damage or distortion.
F. Reseal as required to achieve concrete of specified quality.

~~19.5~~3.5 FIELD QUALITY CONTROL

A. General: The Owner's Testing Laboratory shall inspect concrete formwork as Work progresses. Failure to detect any defective work or material shall not in any way prevent later rejection when such a defect is discovered, nor shall it obligate Design Professionals for final acceptance.
B. Testing Laboratory shall provide qualified personnel at site to inspect formwork using the latest Contract Documents and approved shop drawings as follows:

1. Prior to placement of reinforcement, inspect formwork for grade, quality of material, absence of foreign matter, and other imperfections that might affect suitability of concrete placement and tolerances stated herein.
2. Inspect forms for location, configuration, compliance with specified tolerances, block outs, camber, shoring ties, seal of form joints and compliance with Contract Documents.
3. Verify condition of bond surfaces, locations and sizes of all accessories, embedment items, and anchorage for prevention of displacement.
4. Verify proper use/application of form release agents.
5. Inspect concrete surfaces immediately after removal of formwork and prior to any patching or repair work.

C. Submit inspection, observation, and/or test reports to the Design Professionals and provide an evaluation statement in each report stating whether or not concrete formwork conforms to the requirements of Specifications and Drawings. Specifically note deviations.

D. Immediately report deficiencies to the Contractor. Contractor shall correct the deficiency at no cost to the Owner.

END OF SECTION

SECTION 03 20 00 - CONCRETE REINFORCEMENT AND EMBEDDED ASSEMBLIES

PART 1 - GENERAL

1.1 GENERAL

A. Work of this Section shall conform to requirements of Drawings and general provisions of the Contract, including General and Supplementary Conditions and Division 1 Specification sections.

1.2 SCOPE

A. Provide all labor, materials, equipment, services and transportation for reinforcing steel, accessories, embedments and miscellaneous anchorage accessories, joint fillers, and waterstops for cast-in-place concrete work as shown on Drawings, as specified herein, and as required by the job conditions.

1.3 RELATED WORK SPECIFIED IN OTHER SECTIONS

A.	Submittals	Division 1
B.	Quality Control	Division 1
C.	Concrete Formwork	Section 03 10 00
D.	Cast-in-Place Concrete	Section 03 30 00
E.	Thermal and Moisture Protection	Division 7
F.	Sustainable Design Requirements	Division 1
~~.	"SUSTAINABLE DESIGN REQUIREMENTS": LEED Requirements~~	~~Section 01 81 13~~

~~1.6~~1.4 CODES, STANDARDS AND REFERENCES

A. Building Code: Concrete work shall conform to the requirements of the Building Code identified on the Structural General Notes, and OSHA requirements, except where more stringent conditions or criteria occur in the standards referenced below and on the drawings.

~~1.7~~1.5 STANDARDS:

A. ACI 117 – Standard Specifications for Tolerances for Concrete Construction and Materials.

1. ACI 301 – Standard Specification for Structural Concrete.
2. ACI 315 – Details and Detailing of Concrete Reinforcement.
3. ACI 318 – Building Code Requirements for Reinforced Concrete.
4. American Society for Testing and Materials "ASTM Standards in Building Codes", various standards as referenced herein, latest edition.
5. AWS D1.1 – Structural Welding Code-Steel.
6. AWS D1.4 – Structural Welding Code-Reinforcing Steel.
7. AWS D12.1 – Recommended Practices for Welding Reinforcing Steel Metal Inserts, and Connections in Reinforced Concrete Construction.
8. CRD C 572 – Specification for Polyvinylchloride Waterstops.
9. Concrete Reinforcing Steel Institute "Manual of Standard Practice"
10. ASTM D3963 Fabrication and Jobsite Handling of epoxy Coated Steel Reinforcing Bars.

B. References:

1. US Green Building Council (USGBC), www.usgbc.org

~~1.8~~1.6 DEFINITIONS:

1. The term “Contract Documents” in this specification is defined as the design drawings and the specifications.
2. The term “SER” in this specification is defined as the Structural Engineer of Record for the structure in its final condition.
3. The term “Design Professionals” in this specification is defined as the Owner’s Architect and SER.
4. The term “Contractor” in this specification is defined to include any of the following: General Contractor and their sub-contractors, Construction Manager, Concrete Contractor and their sub-contractors.
5. The term “Testing Agency” in this specification is defined as an independent testing and inspection service engaged by the Owner for quality assurance observation and testing of concrete construction in accordance with applicable building code provisions and any additional activities listed in the Contract Documents.
6. The terms “for record” and “submit for record” in this specification are defined as Contractor submittals that do not require a response from the Design Professionals.
7. Working Days: Monday through Friday, excluding federal or state holidays.

~~1.9~~1.7 CONTRACTOR QUALIFICATIONS

A. The work of this section shall be performed by a fabricator specializing in reinforcing steel fabrication of type for cast-in-place concrete work required for this Project, with a minimum of 10 years of documented successful experience, and have the facilities capable of meeting all requirements of Contract Documents.

1. Welders shall be qualified in accordance with AWS D1.1, within 12 months before starting the work.

a. Make qualification records available to the Design Professionals upon request.

B. Manufacturers shall specialize in manufacturing the types of concrete accessories required for cast-in-place concrete work, with a minimum of 10 years of documented successful experience and shall have the facilities capable of meeting all requirements of Contract Documents as a single-source responsibility and warranty for each type of accessory.

~~1.10~~1.8 SUBMITTALS

A. Where the SUBMITTALS section of this specification is in conflict with Division 1 Submittals, the more stringent requirements for the Contractor apply. Do not submit items not requested.

1. Submittal Schedule: See Section 03 30 00.
2. Shop Drawings: Submit shop drawings that shall clearly indicate, but not be limited to:

a. All details, dimensions and information required for fabrication and placement of concrete reinforcement in accordance with Contract Documents, prepared in accordance with ACI 315 recommendations.
b. Elevations, plans, sections, and dimensions of concrete work with required reinforcement clearances.
c. Ledges, brackets, openings, sleeves, anchor rods, embedments, prefabricated bent-in dowel keyway systems, electrical conduit and items of other trades including interference with reinforcing materials.
d. Sizes, grade designations, spacing, locations, and quantities of wire fabric, reinforcement bars, temperature and shrinkage reinforcement dowels.

1) Do not use dimensions scaled from Contract Drawings to determine bar lengths.
2) Hooks and bends not specifically dimensioned shall be detailed per ACI 318.

e. Bending and cutting schedules, assembly diagrams, splicing and connection requirements, details, and laps.
f. Each type of supporting and spacing devices, including miscellaneous accessories.
g. Construction joint type, details and locations. Contractor shall coordinate with concrete pour schedule and submit for action by the Design Professionals.
h. Submit comprehensive (a single drawing per area/element) layout/placement drawings. Drawings shall consolidate the work of all trades and shall be coordinated by the Contractor. Submit with or prior to reinforcement submittal for same element/area. Drawings shall include:

1) Concrete accessories and embedded items, including fabrication details of items to be placed (exclusive of reinforcement.)
2) Opening in structural members, including floor slab, shearwalls, columns and beams.

i. Reproduction of structural drawings is not permitted.

3. Product Data – Submit for record for each type of product identified in Part 2. Product Data shall be clearly marked to indicate all technical information which specifies full compliance with this section and Contract Documents, including published installation instructions and I.C.C reports, where applicable, for products of each manufacturer specified in this section.
4. Mill Reports: Submit for record.
5. Hazardous Materials Notification: Submit for record. In the event no product or material is available that does not contain hazardous materials as determined by the Owner, a "Material Safety Data Sheet" (MSDS) equivalent to OSHA Form 20 shall be submitted for that proposed product or material prior to installation.

B. Submittal Process: See Section 03 30 00
C. SER Submittal Review: See Section 03 30 00
D. Substitution Request: See Section 03 30 00
E. Request for Information (RFI): See Section 03 30 00
F. LEED certification data as specified in Division 1, Section 01 81 13, “Sustainable Design Requirements”, for the following LEED credits:

1. Credit MR 4.1 & 4.2, Recycled Content
~~1.~~2. Credit MR 5.1 & 5.2, Regional Materials, Manufactured and Harvested / Extracted Locally

~~1.11~~1.9 DELIVERY, HANDLING, STORAGE

A. Comply with General Conditions and Division 1, including the following:

1. Deliver reinforcing steel to Project site bundled, tagged and marked.

a. Use weatherproof tags indicating bar sizes, lengths and other information corresponding to markings shown on placement diagrams.

2. Deliver welded wire fabric in sheets. Do not deliver in rolls.
3. During construction period, properly store reinforcing steel and accessories to assure uniformity throughout the Project.
4. Deliver and store welding electrodes in accordance with AWS D1.4.

5. Immediately remove from site materials not complying with Contract Documents or determined to be damaged.
6. Store reinforcing steel above ground so that it remains clean.

   a. Maintain steel surfaces free from materials and coatings that might impair bond.
   b. Keep covered.
   c. Protect against corrosion or deterioration of any kind.

~~1.12~~1.10 WARRANTY

A. Comply with General Conditions, agreeing to repair or replace specified materials or Work that has failed within the warranty period. Failures include but are not limited to the following:

   1. Bars with kinks or bends not indicated on drawings or on approved shop drawings.
   2. Bars damaged due to bending, straightening or cutting.
   ~~3.~~ Bars heated for bending.~~.~~

~~1.12 LEED SUBMITTALS~~

~~A. Credit MR 4.1, 4.2: Recycled Content – Reinforcement Steel, Reinforcing Wire Fabric, Supports for Reinforcement:~~

   ~~6. Indicate recycled content; indicate percentage of pre-consumer and post-consumer recycled content per unit of product.~~
   ~~7. Indicate relative dollar value of recycled content product to total dollar value of product included in project.~~

~~A. Credit MR 5.1, 5.2 Regional Materials, Manufactured & Harvested / Extracted Locally– Reinforcement Steel:~~

   ~~9. Manufacturing (fabrication) location(s): Indicate location of manufacturing (fabrication) facility; indicate distance between manufacturing facility and the project site.~~
   ~~10. Product Value: Indicate dollar value of product containing local/regional materials; include materials cost only.~~
   ~~11.~~3. ~~Product Component(s) Value: Where product components are sourced or manufactured in separate locations, provide location information for each component. Indicate the percentage by weight of each component per unit of product.~~

PART 2 - PRODUCTS

2.1 REINFORCEMENT

A. Reinforcing Steel:

   1. Type: Deformed billet steel bars, ASTM A 615, Grade 60 or 75 as indicated on drawings.
   2. Size: As indicated on structural drawings.
   3. Where indicated on drawings, reinforcing steel shall be hot-dipped galvanized after fabrication in accordance with ASTM A 767, Class II, with galvanizing material protected from embrittlement during galvanizing process in accordance with ASTM A 143.

      a. Galvanized finish shall meet the bend and shear test requirements of ASTM A 615.

4. Epoxy-Coated: ASTM A 775 where indicated on drawings.
5. Weldable reinforcement: ASTM A 706 where indicated on drawings.

B. Welded Wire Reinforcement:

1. Type: steel wire, plain finish, ASTM A 82.
2. Type: steel wire, deformed, ASTM A 496.
3. Size: As indicated on structural drawings.

4. Where indicated on drawings, welded wire reinforcement shall be hot-dipped galvanized after fabrication in accordance with ASTM A 767, Class II, with galvanizing material protected from embrittlement during galvanizing process in accordance with ASTM A 143.

   a. Galvanized finish shall meet the bend and shear test requirements of ASTM A 615.

5. Plain Steel Welded Wire Reinforcement: ASTM A 185.
6. Deformed Steel Welded Wire Reinforcement: ASTM A 497.
7. Epoxy-Coated Welded Wire Reinforcement: ASTM A 884, Class A.

2.2 ACCESSORIES

A. Tie Wire:

1. Type: Minimum 16 gauge (1.5mm) annealed steel wire, ASTM A 82.
2. Wire Bar Type: Comply with CRSI.

B. Mechanical Splicing Systems:

1. Mechanical tension and compression splicing systems shall be used where indicated on drawings.
2. Acceptable Products: Lenton Cadweld by Erico, Solon, OH or Bar-Lock by Dayton Superior, Dayton, OH, TX, Grip-Twist by Bar Splice, Dayton, OH or Lenton Couplers by Erico, Solon, OH. Splices shall be installed in compliance with manufacturer's requirements.
3. Mechanical and welded tensile mechanical splicing systems shall be capable of developing 125% of the reinforcing steel ASTM specified minimum yield strength (Type 1) except where indicated as Type 2 (100% of specified tensile strength).
4. Mechanical compression splices shall be such that the compression stress is transmitted by end bearing held in concentric contact.

C. Mechanical Bar Terminators:

1. For bar sizes #11 (ø36) or smaller where specifically detailed on drawings, mechanical bar terminators shall be used.
2. Acceptable Products: Lenton Terminator by Erico, Solon, OH or Grip-Twist Doughnut by Bar-Splice, Dayton, OH.

D. Supports for Reinforcement:

1. Types: Bolsters, chairs, spacers, clips, chair bars, and other devices for properly placing, spacing, supporting, and fastening the reinforcement, hot-dip galvanized after fabrication, in accordance with ASTM A 123, or epoxy coated to match supported reinforcement.
2. For Contact with Forms: Use types with not less than 3/32" (2.5mm) of plastic between metal and concrete surface.

a. Plastic tips shall extend not less than ½" (12mm) on metal legs.

3. Individual and continuous slab bolsters and chairs shall be of type to suit various conditions encountered and must be capable of supporting 300 pound (1.5kN) load without damage or permanent distortion.
4. Unless otherwise indicated on drawings, bottom reinforcing bars in footings shall be supported by precast concrete bricks or individual high chairs with welded sand plates on bottom.
5. For Slabs on Grade: Use supports with sand plates or horizontal runners where base material will not support chair legs.

E. Deformed Bar Anchors:

1. Type: Automatic end welded, ASTM A 496 quality.
2. Size and Grade: As indicated on structural drawings by Nelson Stud Welding.

F. Anchor rods and dowels:

1. Types and Sizes: Provide sizes and types of anchor rods and dowels as indicated on the drawings. Each type of anchor shall be manufactured of structural quality steel, designed for cast-in-place concrete applications and be of sizes as indicated on drawings, complete with washers, nuts, plates and miscellaneous accessories required to meet Contract Document requirements.
2. Adhesive Anchors for anchor rods and dowels in existing concrete:

a. HIT-RE 500-SD by Hilti, Inc., Tulsa, OK
b. PE 1000+ by Powers Fasteners, Inc., Brewster, NY
c. Epcon A7 by ITW Red Head, Addison, IL
d. SET-XP by Simpson Strong-Tie Co., Pleasanton, CA

G. Prefabricated Bent-In Dowel Keyway System:

1. Type, Size and Grade as indicated on drawings.
2. Acceptable Products: Lenton Form Savers by Erico, Solon, OH or Stabox by Meadow Burke, Tampa, FL.
3. Installation: Per Manufacturer's instructions.

2.3 ANCHORAGE ACCESSORIES

A. General: Miscellaneous anchorage accessories for anchoring structural, architectural, electrical, and mechanical items to poured concrete shall include but not be limited to the following:

1. Concrete Anchors: Headed or bent studs ASTM A 108/Grade 1015 through 1020, minimum yield strength of 50,000 psi (345MPa), minimum tensile strength of 60,000 psi (415MPa).
2. Anchor Rods: ASTM F1554, Grade as noted on drawings.
3. Threaded Inserts: Manufactured by Dayton/Richmond Screw Anchor Co. or Powers Fasteners, Inc.
4. Adhesive Anchors:

a. HIT-RE 500-SD by Hilti, Inc., Tulsa, OK
b. PE 1000+ by Powers Fasteners, Inc., Brewster, NY
c. Epcon A7 by ITW Red Head, Addison, IL
d. SET-XP by Simpson Strong-Tie Co., Pleasanton, CA

5. Expansion Anchors:

a. Kwik Bolt TZ or Kwik Bolt 3 by Hilti, Inc., Tulsa, OK
b. Power Stud+ SD1 or SD2 by Powers Fasteners, Inc., Brewster, NY

c. Trubolt or Trubolt+ by ITW Red Head, Addison, IL
d. Strong-Bolt by Simpson Strong-Tie Co., Pleasanton, CA

6. Threaded Anchors:

a. HUS-H by Hilti, Inc., Tulsa, OK
b. Wedge Bolt+ by Powers Fasteners, Inc., Brewster, NY
c. Tapcon by ITW Red Head, Addison, IL
d. Titan HD by Simpson Strong-Tie Co., Pleasanton, CA

7. Inserts and Coil Rods: Yield strength 65,000 psi (450MPa), ASTM B 633, manufactured by Acrow-Richmond Limited or Dayton Superior, Dayton, OH.
8. Welding Electrodes: AWS 5.5, Series E70.
9. Welded Deformed Bar Anchors: Welded by full-fusion process, as furnished by TRW Nelson Stud Welding Division or equivalent.

B. Dovetail Anchor Slots:

1. Type: Formed 22 gauge (0.85mm) galvanized steel manufactured by Heckmann Building Products/Chicago, Illinois or Hohmann and Barnard/Hauppauge, New York.
2. Location of Use: Continuous installation of anchor slots, full height of masonry walls, where masonry walls abut poured concrete walls.
3. Fill slot with temporary filler or cover face opening to prevent intrusion of concrete or debris.
4. Finish: Hot-dip galvanized or zinc-plated steel.
5. Stainless steel anchors are acceptable.

2.4 JOINT FILLERS

A. Permanent Compressible Joint Filler:

1. Type: W. R. Meadows: “Ceramar” closed-cell expansion joint filler, ultraviolet stable, minimal moisture absorption, non-impregnated, nonstaining and nonbleeding, inert and compatible with cold-applied sealants.
2. Location of Use: Slabs and curbs as indicated on drawings or required.
3. Thickness: As indicated on drawings or required.

B. Temporary Compressible Joint Filler:

1. Type: White molded polystyrene beadboard.
2. Location of Use:

a. In slabs, curbs, and walls which must be removed prior to joint sealant installation.
b. Vertically to isolate walls from columns or other walls.

C. Noncompressible Joint Filler:

1. Type: Dow Chemical's "STYROFOAM 40" rigid closed-cell extruded polystyrene board, square edges, 40 psi (275kPa) compressive strength, ASTM C 578, Type IV.
2. Thickness: As indicated on drawings.
3. Location of Use: As indicated on drawings or required.

D. Asphalt-Impregnated Joint Filler:

1. Type: W.R. Meadows Asphalt Expansion Joint Filler, preformed, ASTM D 994.
2. Thickness: ½” (12mm) maximum, as indicated on drawings or required.
3. Location of Use: Sidewalks at foundation walls and as indicated on drawings or required.

E. Asphalt-impregnated fiberboard expansion joint filler for interior work:

1. Type: ASTM D1751.

F. Self-expanding cork board expansion joint filler for exterior work:

1. Type: ASTM D1752.

G. Construction Joints:

1. Type: Tongue and groove type profile of galvanized steel, with knock-out holes at 6" (150mm) on center to receive dowelling, complete with anchorage.

2.5 WATERSTOPS

A. Preformed Bentonite Waterproofing Strips especially formulated for concrete cold joints at footings, walls, or slabs.

1. Acceptable Products:

a. Volclay Waterstop RX by CETCO Building Materials Group, Hoffman Estates, IL
b. Adcor ES by W. R. Grace & Co., Cambridge, MA

2. Size: 3/4" (20mm) by 3/8" (10mm) strips minimum, 25 ft. (7.5m) long, and weighing at least 0.165 lbs/ft (0.245kg/m).
3. Location of Use: Concrete cold joints at footings, walls and slab joints.
4. Comply with manufacturer product application and installation instructions.

B. Polyvinyl Chloride Waterstops:

1. Type: “PVC Waterstops” by Bometals, Inc. Carrollton, GA, for embedding in concrete to prevent passage of fluids through joints. Factory fabricate corners, intersections and directional changes. U.S. Corp of Engineers Specification CRD C 572.

C. LEED REQUIREMENTS

1. LEED Credit MR 4.1, 4.2: Recycled Content: Minimum 25 percent post-consumer recycled content.
2. LEED Credit MR 5.1, 5.2, Regional Materials, Manufactured & Harvested / Extracted Locally: Reinforcing steel fabrication and milling facility should be within 500 miles (800km) of project site.

PART 3 - EXECUTION

3.1 FABRICATION

A. Reinforcing Steel Fabrication:

1. Fabricate in accordance with approved shop drawings, ACI 315 and Contract Documents.
2. Heating of Reinforcement: Will be permitted only with specific prior approval of the SER.
3. Welding: Comply with ANSI/AWS D1.4; use E9018 electrodes or approved electrodes.
4. Tolerances: Comply with ACI 117.

5. Unacceptable Materials: Reinforcement with any of following defects will not be permitted in Work.

    a. Bar lengths, depths, and bends exceeding ACI fabrication tolerances.
    b. Bends or kinks not indicated on Drawings or final shop drawings.
    c. Bars with reduced cross-section due to excessive rusting or other cause.

B. Welded Wire Reinforcement:

1. Type: As fabricated in accordance with CRSI, unless otherwise noted.

C. Templates:

1. Required for all footing and column dowels, and where required for proper alignment of reinforcing.

D. Assemblies:

1. Fabricate and assemble structural steel items in shop in conformance with AISC and AWS D1.1. Shearing, flame cutting, and chipping shall be done carefully and accurately. Cut, drill, or punch holes at right angles to the surface of the metal. Do not make or enlarge holes by burning. Holes shall be clean-cut without torn or ragged edges.
2. Welding of deformed bar anchors and headed stud anchors shall be installed by full-fusion process equivalent to TRW Nelson Stud Welding Division or KSM Welding Services Division, Omark Industries.
3. Welding of reinforcement shall be done in accordance with AWS requirements. Welding shall be performed subject to the observance and testing by Owner's Testing Laboratory.
4. Galvanizing where required, shall be applied after fabrication and prior to casting concrete.
5. Welding of crossing bars (tack welding) for assembly of reinforcement is not permitted without use of weldable reinforcement and express written consent of SER.

3.2 INSTALLATION OF REINFORCEMENT

A. General:

1. Perform the work of this section in accordance with approved shop drawings, ACI 318 and CRSI recommended practice for "Placing Reinforcing Bars", for details and methods of reinforcement placement and supports, and as specified.
2. Before placing reinforcement steel, inspect forms for proper fitting and compliance with allowable tolerances.
3. Reinforcement shall be free of form coatings, sealers, powdered and scaled rust, loose mill scale, earth, ice, and other materials which will reduce or destroy bond with concrete.
4. Do not place concrete until the completed reinforcement steel work has been observed and accepted by Owner's Testing Laboratory.
5. Reinforcement steel is not permitted to be "floated into position".
6. Bend bars cold.

    a. Do not heat or flame cut bars.

b. No field bending of bars partially embedded in concrete is permitted, unless specifically approved by the SER and tested by Independent Testing Laboratory for cracks.

7. Weld only as indicated.

a. Perform welding per ANSI/AWS D12.1 and/or ANSI/AWS D1.4.
b. See structural drawings for additional requirements.

8. Tag reinforcement steel for easy identification.

B. Placement of Reinforcement Bars:

1. Comply with approved shop drawings, ACI 318 and Contract Documents.
2. Accurately position, support and secure reinforcement in a manner to prevent displacement before and during placement of concrete.

a. Place reinforcement bars within tolerances specified in ACI 117.
b. Locate and support reinforcement by metal chairs, runners, bolsters, spacers, hangers and other accessories for fastening reinforcing bars and welded wire reinforcement in place.

3. If bars are displaced beyond specified tolerance when relocating the bars to avoid interference with other reinforcement or embedded items, notify the Design Professionals for approval prior to concrete placement.
4. Avoid cutting or puncturing vapor retarder during reinforcement placement.

a. Repair damages before placing concrete.

5. Concrete Coverage: Maintain concrete cover around reinforcement as indicated on drawings.
6. Bar Supports: Use type specified in this section.
7. Tie Wires: After cutting, turn tie wires to the inside of section and bend so that concrete placement will not force ends to be exposed at face of concrete.

C. Placement of Wire Reinforcement:

1. Install in lengths as long as practicable.
2. Support in position adequately to prevent bending of reinforcement between supports before and during placement of concrete.
3. Overlap the wire reinforcement 6” (150mm) or one panel width + 2” (50mm), whichever is larger.

a. Securely tie together with wire.

4. Offset laps of adjoining widths to prevent continuous laps in either direction.
5. Locate wire fabric in the top third of slabs, unless noted otherwise on structural drawings.

D. At Construction Joints:

1. Reinforcement bars and wire reinforcement shall be continuous through construction joints, unless otherwise indicated on Drawings. See Drawings for scheduled lap splices.

E. At Expansion Joints:

1. Reinforcing bars and wire fabric shall NOT be continuous through expansion joints, unless otherwise indicated on drawings.

F. Splicing:

1. Unless otherwise indicated on drawings provide lap splices for bar sizes #11 (ø36) and smaller by lapping ends, placing bars in contact, and tying tightly with wire in accordance with requirements of ACI 318 for lap lengths indicated on drawings.
2. At all #14 (ø43) and #18 (ø57) bars and where mechanical splices are specifically indicated on drawings, comply with requirements specified in this Specification section under “Mechanical Splicing Systems”.
3. Do not splice reinforcement except as indicated on structural drawings.
4. Tension couplers may be used and installed per manufacturer’s specifications where indicated on drawings or as approved by Engineer.

G. Dowels in Existing Concrete:

1. Install dowels and dowel adhesive in accordance with supplier’s recommendations.
2. Minimum embedment length shall be 12 bar diameters, unless noted otherwise.

3.3 INSTALLATION OF ACCESSORIES

A. Install concrete accessories in accordance with manufacturer's published instructions and Contract Documents.

1. Set and secure embedments, including embedded plates, bearing plates, and anchor bolts, per approved setting drawings and in such a manner to prevent movement during placement of concrete and to allow removal of formwork without damage.
2. Inspect locations to receive concrete accessories.
3. Immediately report to the Design Professionals in writing of conditions that will adversely affect the Work or fails to meet Contract Document requirements.
4. Do not place concrete until reinforcement, accessories and other built-in items have been inspected and accepted by Owner’s Testing Laboratory.

B. Construction and Contraction (Control) Joints:

1. Construction and contraction (control) joints indicated on drawings are mandatory and must not be omitted.

    a. Provide construction joints in accordance with ACI 318.
    b. Provide 1-1/2” (40mm) deep key type construction joints at end of each placement for slabs, beams, walls and footings.

        1) Bevel forms for easy removal.

2. Provide waterstops in construction joints as indicated on the Contract Documents in sizes to suit joint.
3. Install waterstops to form continuous diaphragm in each joint.
4. Support and protect exposed waterstops during progress of Work.
5. Field-fabricate joints in waterstops according to manufacturer’s printed instructions.

C. Coordinate the installation of pipes, bolts, hangers, anchors, flashing and other embedded items with the work of other trades.

3.4 FIELD QUALITY CONTROL

A. General: The Owner's Testing Laboratory shall test and inspect concrete reinforcement and embedded assemblies as Work progresses. Failure to detect any defective work or material shall not in any way prevent later rejection when such defect is discovered nor shall it obligate the Design Professionals for final acceptance.

B. Owner's Testing Laboratory shall provide qualified personnel at site to inspect reinforcement and embeds using the latest Drawings and reviewed shop drawings, as follows:

1. Prior to placement, inspect reinforcement and embeds for grade, quality of material, absence of foreign matter, and for suitable storage.
2. Provide continuous inspection of reinforcement and embedded assemblies during placement and immediately prior to concreting operations for: size, quantity, vertical and horizontal spacing and location, correctness of bends and splices, mechanical splices, clearances, compliance with specified tolerances, security of supports and ties, concrete cover, and absence of foreign matter.

C. Inspect epoxy-coated reinforcement for coating damage and required applied coatings.Owner's Testing Laboratory shall submit inspection, observation, and/or test reports to the Design Professionals as required herein and shall provide an evaluation statement in each report stating whether or not concrete reinforcement and embedded assemblies conforms to requirements of Specifications and Drawings and shall specifically note deviations there from.

D. Immediately report deficiencies to the Contractor. Contractor shall prepare proposed remedy for deficiency. Contractor shall present proposal to the Design Professionals for approval. After an approved proposal is accepted by the Design Professionals, the Contractor shall correct the deficiency at no cost to the Owner.

END OF SECTION

SECTION 03 30 00 - CAST-IN-PLACE CONCRETE

PART 1 - GENERAL

1.1 GENERAL

A. Work of this Section shall conform to requirements of Drawings and general provisions of the Contract, including General and Supplementary Conditions and Division 1 Specification sections

1.2 SCOPE

A. Provide all labor, materials, equipment, services and transportation required to complete all concrete work as shown on Drawings, as specified herein, and as required by the job conditions. This specification is not intended to address the particular requirements of Architectural Concrete.

1.3 RELATED WORK SPECIFIED IN OTHER SECTIONS

A.	Submittals	Division 1
B.	Quality Control	Division 1
~~B.~~C.	Sustainable Design Requirements	Division 1
~~C.~~D.	Concrete Formwork	Section 03 10 00
~~D.~~E.	Concrete Reinforcement and Embedded Assemblies	Section 03 20 00
~~E.~~F.	Concrete Finishes	Section 03 35 00
~~F.~~G.	Structural Steel Framing	Section 05 12 00
~~G.~~H.	Metal Fabrications	Section 05 50 00
~~H.~~I.	Thermal and Moisture Protection	Division 7

1.4 CODES, STANDARDS AND REFERENCES

A. Building Code: Concrete work shall conform to the requirements of the Building Code identified on the Structural General Notes, and OSHA requirements, except where more stringent conditions or criteria occur in the standards referenced below and on the drawings.

B. Standards:

1. ACI 117 – Standard Specifications for Tolerances for Concrete Construction and Materials.
2. ACI 301 – Standard Specifications for Structural Concrete.
3. ACI 304 -- Recommended Practice for Measuring, Mixing and Placing Concrete
4. ACI 318 – Building Code Requirements for Structural Concrete.
5. American Concrete Institute “Manual of Concrete Practice”, various committee reports as referenced herein, latest edition.
6. American Society for Testing and Materials "ASTM Standards in Building Codes", various standards as referenced herein, latest edition.
7. ASTM C1202 – Standard Test Method for Electrical Indication of Concrete’s Ability to Resist Chloride Ion Penetration
8. AASHTO T259 – Method of Test for Resistance of Concrete to Chloride Ion Penetration
9. AASHTO T277 – Standard Method of Test for Rapid Determination of the Chloride Permeability of Concrete
10. AASHTO T318 – Standard Method of Test for Water Content of Freshly Mixed Concrete Using Microwave Oven Drying.

11. State of California, Business and Transportation Agency Division of Highways' "Materials Manual," (CMM).

C. References:

1. US Green Building Council (USGBC), www.usgbc.org

D. Definitions:

1. The term "Contract Documents" in this specification is defined as the design drawings and the specifications.
2. The term "SER" in this specification is defined as the Structural Engineer of Record for the structure in its final condition.
3. The term "Design Professionals" in this specification is defined as the Owner's Architect and SER.
4. The term "Contractor" in this specification is defined to include any of the following: General Contractor and their sub-contractors, Construction Manager, Concrete Contractor and their sub-contractors.
5. The term "Testing Agency" in this specification is defined as an independent testing and inspection service engaged by the Owner for quality assurance observation and testing of concrete construction in accordance with applicable building code provisions and any additional activities listed in the Contract Documents.
6. The terms "for record" and "submit for record" in this specification are defined as Contractor submittals that do not require a response from the Design Professionals.
7. Working Days: Monday through Friday, excluding federal or state holidays.

1.5 CONCRETE CONTRACTOR QUALIFICATIONS

A. The work of this section shall be performed by a company which specializes in the type of concrete work required for this Project and shall be performed by skilled workmen thoroughly experienced in the necessary crafts.
B. Contractor's Testing Laboratory Services: Required as specified in Division 1, and herein.
C. Materials and installed work may require testing and retesting at anytime during progress of work, as directed by Design Professionals. Tests, including retesting of rejected materials for installed work will be done at Contractor's expense.

1.6 SUBMITTALS

A. Where the SUBMITTALS section of this specification is in conflict with Division 1 Submittals, the more stringent requirements for the Contractor apply. Do not submit items not requested.

1. Submittal Schedule: The contractor shall submit for approval a schedule at least twenty (20) working days prior to commencing submittals.

a. This schedule shall include a list, in order of date to be submitted, of all drawings and other required submittal items scheduled to be submitted. The schedule shall list the proposed submittals for each week, as well as their formats. Once shop drawing submissions have commenced any modification or addition to this schedule must be submitted for approval at least twenty (20) working days before the modification or addition is proposed to take place.
b. If at any time the total number of shop drawings received in any one week period exceeds the amount in the approved schedule by more than 10% for that week, the Design Professionals have the right to add two days to the average turnaround time for each 20% increment in excess of the scheduled quantity for that week's submissions. For example if the weekly total exceeds the schedule by 10% to 20%, two days may be added; if it is exceeded by 21%

to 40%, four days may be added. The return dates for subsequent submittals may be extended based on the additional review time stated above

2. The Contractor's Testing Laboratory's certificate of compliance per ASTM E329.
3. Mix Designs**:** Submit concrete mix designs for each type and strength of concrete required for this Project at least thirty (30) days before placing concrete. The Contractor shall perform test or assemble the necessary data indicating conformance with specifications.

   a. Mix designs shall be prepared or reviewed by an approved independent testing laboratory retained by the Contractor in accordance with requirements of ACI 301 and ACI 318, signed by a registered design professional licensed to practice as a Professional Engineer in the state where the project is located**,** and shall be coordinated with design requirements and Contract Documents.
   b. Before submitting to Owner's Testing Agency, submit complete mix design data for each separate mix to be used on the Project in a single submittal.
   c. Provide a completed "Concrete Mix Design Submittal Form"(attached to the end of this Specification Section) for each proposed concrete mix.
   d. Data shall be from the same production facility that will be used for this Project.
   e. Samples shall be provided only as requested by the Architect.

      1) Certification from vendor that samples originate from and are representative of each lot proposed for use.

   f. Mix Design data shall include but not be limited to the following:

      1) Locations on the Project where each mix design is to be used corresponding to Structural General Notes on the Drawings.
      2) Design Compressive Strength: As indicated on the Drawings.
      3) Proportions: ACI 301 and ACI 318.
      4) Gradation and quality of each type of ingredient including fresh (wet) unit weight, aggregates sieve analysis.
      5) Water/cementitious material ratio.
      6) Certification that portland cement meets Specification requirements.
      7) Evaluate and classify fly ash in accordance with ASTM D 5759.
      8) Report chemical analysis of fly ash in accordance with ASTM C 311.
      9) Classify blast furnace slag in accordance with ASTM C 989.
      10) Slump: ASTM C 143.
      11) Certification and test results of the total water soluble chloride ion content of the design mix for concrete exposed to sea water, de-icing salts or other sources of chlorides - AASHTO T260 or ASTM C 1218.
      12) Air content of freshly mixed concrete by the pressure method, ASTM C 231, or the volumetric method, ASTM C 173.
      13) Unit Weight of Concrete: ASTM C 138.
      14) Design strength at 28, 56 or 90 days, as indicated on Contract Documents: ASTM C 39.

         a) Document strength based on basis of previous field experience or trial mixtures per ACI 301. Proportioning by Water-Cement Ratio is not permitted.

         b) Submit strength test records, mix design materials, conditions, and proportions for concrete used for record of tests, standard deviation calculation, and determination of required average compressive strength. Submitted compression strength test reports shall conform to CBC Section 1905

c) If early concrete strengths are required, contractor shall submit trial mixture results as required.

15) Test records to support proposed mixtures shall be no more than 12 months old and use current cement and aggregate sources. Test records to establish standard deviation may be older if necessary to have the required number of samples.
16) Manufacturer's product data for each type of admixture.
17) Manufacturer's certification that all admixtures used are compatible with each other.
18) All information indicating compliance with Contract Documents including method of placement and method of curing.
19) Normalweight Concrete: Density per ASTM C 138. Design the mix to produce the strength, modulus of elasticity and density as indicated on the Contract Documents.
20) Certification from a qualified testing agency indicating absence of deleterious expansion of concrete due to alkali aggregate reactivity in accordance with ASTM C 33

4. Hot and Cold Weather Procedures: Submit for record to Design Professional's written procedures for placement of concrete in hot and cold weather conditions. Hot and Cold weather are as defined in the Concrete Placement section of this specification.
5. Product Data: Submit product data clearly marked to indicate all technical information which specifies full compliance with this section and Contract Documents, including published application instructions, product characteristics, compatibility and limitations for each of the following:

   a. Bonding agents.
   b. Curing compound and liquid sealer densifier. Submit for record to Design Professionals a written statement guaranteeing that the compound will not leave discoloration on concrete to be left exposed, or affect the bond for paint or other applied finishes. Include provision in written statement that in the event of failure of applied finishes to bond to membrane cured concrete, to remove the curing compound and leave suitable surfaces for bonding such finishes.
   c. Absorptive covers and moisture retaining covers.
   d. Vapor Retarder: See Division 7, Thermal and Moisture Protection.
   e. Self-leveling concrete topping.
   f. Grout: Submittal of Grout not by manufacturers listed herein must be accompanied by independent certification of ASTM C 1107 compliance without modification of standard methods.
   g. Other products proposed by contractor

6. Submit Concrete Weighmaster affidavit if continuous inspection of batch plant has been waived per Section 1.9 F.
7. Concrete Joint Locations**:** Submit plans indicating locations and details of construction joints, contraction joints, waterstops, sleeves, embedments, etc that interact with the joints. Contractor to coordinate joint location with reinforcement shop drawings. Reinforcement shop drawings shall indicate additional reinforcement bars where required at construction joints.
8. Joint locations for concrete slabs to receive a terrazzo or similar finish subject to reflective cracking must be coordinated with layout of finish drawings.
9. Preconstruction Survey: Submit for record. Where interface with existing construction occurs, before related shop drawings are prepared survey the existing construction and submit the survey prepared by a professional surveyor employed by the Contractor to the Design Professionals.

10. Survey of Flat Plate or Flat Slab Concrete Floors during construction: Submit for record. Survey requirements are described on Drawings. Based on survey results, SER may propose adjustments to formwork and camber.
11. Survey of As-built Floor Conditions: Submit for Record. Survey and report flatness (F_F), levelness (F_L), and final elevations of finished floors prior to shoring removal. For slabs that include camber, do not test for levelness (F_L). Perform F_F/F_L testing in accordance with ASTM E 1155 requirements.
12. Structural Repairs: Submit procedures and product information.
13. Patching Defective Concrete Finishes: Submit procedures and product information.
14. Hazardous Materials Notification: Submit for Record. In the event no product or material is available that does not contain hazardous materials as determined by the Owner, a "Material Safety Data Sheet" (MSDS) equivalent to OSHA Form 20 shall be submitted for that proposed product or material prior to installation. Submit for Record.

B. Submittal Process

1. Submittal of shop drawings and other submittals by the Contractor shall constitute Contractor's representation that the Contractor has verified all quantities, dimensions, specified performance criteria, installation requirements, materials, catalog numbers and similar data with respect thereto and reviewed or coordinated each drawing with other drawings and other trades. The Contractor shall place their shop drawing stamp on all submittals confirming the above.
2. Shop drawings: Submit in complete packages so that individual parts and the assembled unit may be reviewed together. This Specification Section and the applicable drawings used in the development of the shop drawings shall be referenced on each shop drawing to facilitate checking.
3. If the Contractor and Design Team agree to process shop drawings electronically, Contractor shall submit one hardcopy and one electronic copy to the SER. The naming convention of each drawing must follow the submittal numbering system and include the submittal number, specification number, revision number and drawing number in the prefix of the drawing name.
4. All modifications or revisions to submittals and shop drawings must be clouded, with an appropriate revision number clearly indicated. The following shall automatically be considered cause for rejection of the modification or revision whether or not the drawing has been approved by the Design Professionals:

    a. Failure to specifically cloud modifications
    b. Unapproved revisions to previous submittals
    c. Unapproved departure from Contract Documents

5. Resubmittals: Completely address previous comments prior to resubmitting a drawing. Resubmit only those drawings that require resubmittal. Do not include new content not previously reviewed.
6. Resubmittals Compensation: The Contractor shall compensate the Design Professionals for submittals that must be reviewed more than twice due to contractors' errors. The Contractor shall compensate the Design Professionals at standard billing rates plus out-of-pocket expenses incurred at cost + 10%.
7. The Contractor shall deliver to the Design Professionals at the completion of the job two (2) copies of the electronic version of the final as-built shop drawings on a CD-ROM or other media acceptable to the Design Professionals.

C. SER Submittal Review

1. The Design Professionals' review and approval of shop drawings and other submittals shall be for general conformance with the design intent of the work and

with the information given in the Contract Documents only and will not in any way relieve the Contractor or the Contractor's Engineer from:

a. Conforming to the Contract Documents.
b. Coordination with other trades.
c. Responsibility for all required detailing and proper fitting of construction work.
d. The necessity of furnishing material and workmanship required by drawings and specifications which may not be indicated on the shop drawings.
e. Control or charge of construction means, methods, techniques, sequences or procedures, for safety precautions and programs in connection with the work.

2. TYPE 1 Stamp - For shop drawings for building elements designed by the SER, the responses on the shop drawing review stamp used by the SER require the following actions:

a. APPROVED indicates that the SER has found that the information presented on the shop or erection drawing appears to conform to the requirements of the Contract Documents. Fabrication, manufacture or construction of the elements of work shown in the shop drawing may proceed, provided that work is in compliance with the Contract Documents.
b. APPROVED AS NOTED indicates that the SER requires the shop or erection drawing to be corrected to reflect the notes and comments shown. Fabrication, manufacture or construction of the elements of work shown in the shop drawing may proceed, provided that work is in compliance with the notations shown on the shop drawings and the Contract Documents. Promptly resubmit the corrected shop or erection drawing for record.
c. REVISE and RESUBMIT indicates that the SER requires resubmission of the shop or erection drawing after correction per notes and comments. None of the elements of work shown on the shop drawing shall be fabricated, manufactured or constructed until the Contractor has received a returned shop drawing marked Approved or Approved as Noted.
d. NOT APPROVED indicates that the shop or erection drawing does not conform to the Contract Documents and must be extensively revised before re-submittal. None of the elements of work shown on the shop drawing shall be fabricated, manufactured or constructed until the Contractor has received a returned shop drawing marked Approved or Approved as Noted.

3. TYPE 2 Stamp - For submittals for building elements which are not designed by the SER but are performance specified, for items that do not form part of the completed structural system but impose loads on the structure, and for construction items or activities which have an effect on the final structure, a second stamp will be used. The responses on the stamp used by the SER require the following actions:

a. NO EXCEPTION TAKEN indicates that the SER has found that the information presented on the submittal appears to conform to the requirements of the Contract Documents. Fabrication, manufacture or construction of the elements of work shown in the shop drawing may proceed, provided that work is in compliance with the Contract Documents.
b. EXCEPTIONS NOTED indicates that the SER requires the submittal be corrected to reflect the notes and comments shown. Fabrication, manufacture or construction of the elements of work shown in the shop drawing may proceed, provided that work is in compliance with the notations shown on the shop drawings and the Contract Documents. Promptly resubmit the corrected document for record.
c. REJECTED indicates that the SER requires resubmission of the submittal after correction per notes and comments. None of the elements of work shown on the shop drawing shall be fabricated, manufactured or constructed. Contractor

to revise and resubmit until SER response of No Exceptions or Exceptions Noted is received.

D. Substitution Request

1. Requests for any departure from Contract Documents must be submitted in writing by the Contractor and accepted in writing by the Design Professionals, prior to receipt of submittals.
2. All substitutions must be requested using the structural substitution request form included at the end of this section. Acceptance using the structural substitution request form indicates acceptability of the structural concept only. Contractor must submit shop drawings reflecting accepted substitutions for review in accordance with this Specification. The structural substitution request form, even if accepted, does not constitute a change order.
3. Accepted substitutions or modifications shall be coordinated and incorporated in the work at the sole expense of the Contractor.
4. The acceptance by the Design Professionals of a specific and isolated request by the contractor to deviate from these requirements does not constitute a waiving of that requirement for other elements of, or locations in the project, unless specifically addressed as such and permitted by the Design Professionals in writing.
5. Compensation for Additional Services: Should additional work by Design Professionals such as design, drafting, meetings and/or visits be required which are necessitated for the review and/or incorporation of the Contractor-requested substitution, including indirect effects on other portions of the work, the Contractor is responsible for paying for additional work performed by the Design Professionals at the standard billing rates plus out-of-pocket expenses incurred at cost + 10%. Additional costs for testing and inspection by the Owner shall also be compensated by the Contractor.
6. Contractor is responsible for means and methods and any impacts on other portions of the work that may arise from this substitution.

E. Request for Information (RFI)

1. RFIs shall be submitted by the General Contractor or Construction Manager. RFIs submitted by other entities will be returned with no response.
2. Limit RFI to one subject.
3. Submit RFI immediately upon discovery of the need for interpretation or clarification of the Contract Documents. Submit RFI within timeframe so as not to delay the Construction Schedule while allowing the full response time described below.
4. The response time for answering an RFI depends on the category in which it is assigned.

    a. Upon receipt by the SER, each RFI will be assigned to one of the following categories:

        1) No cost clarification
        2) Shown in Contract Documents
        3) Change to be issued in future document revision
        4) Previously answered
        5) Information needs to be provided by others.
        6) Request for corrective field work
        7) Request for substitution

5. RFIs in categories 1, 2, 3, 4 and 5 will be turned around by the SER in number of days referenced in Division 1.
6. RFIs in categories 6 and 7 will be rejected and must be submitted as submittals or requests for substitution.

F. LEED certification data as specified in Division 1, Section 01 81 13, “Sustainable Design Requirements”, for the following LEED credits:

1. Credit MR 4.1 & 4.2, Recycled Content
~~6.~~2. Credit MR 5.1 & 5.2, Regional Materials, Manufactured and Harvested / Extracted Locally

1.7 STORAGE, HANDLING AND DELIVERY

A. Comply with General Conditions and Division 1.
B. Storage:

1. Store materials in accordance with ACI 304R.
2. Store cement and supplementary cementitious materials in weathertight buildings, bins or silos that will exclude moisture and contaminates.
3. Store admixtures to avoid contamination, evaporation, damage, and in accordance with manufacturer's temperature and other recommendations.
4. Keep packaged material in original containers with seals unbroken and labels intact until time of use.

C. Handling:

1. Handle fine and coarse aggregates as separate ingredients.
2. Arrange aggregate stockpiles to avoid excessive segregation, and prevent contamination with other materials or with other sizes of like aggregates.
3. Do not use frozen or partially frozen aggregates.
4. Allow sand to drain until it has reached relatively uniform moisture content before use.
5. Protect liquid admixtures from freezing and temperature changes that would adversely affect characteristics, and in accordance with manufacturer's recommendations.

1.8 PRE-INSTALLATION CONFERENCE

A. At least 30 working days prior to the start of concrete construction, the Contractor shall hold a meeting to review the approvedd concrete mix designs and to determine the procedures for producing proper concrete construction. The Contractor shall notify the Design Professionals of the meeting and require responsible representatives of every party who is concerned with the concrete Work to attend the conference, including but not limited to the following:

1. Contractor.
2. Owner’s Testing Agency representative
3. Concrete Subcontractor.
4. Ready-mix concrete producer.
5. Admixture manufacturer(s).

B. Minutes of the meeting shall be recorded and distributed by the Contractor to all parties concerned within five working days of the meeting. One copy of the minutes shall also be furnished to the following:

1. Design Professionals.
2. Owner's Representative.

C. The minutes shall include a statement by the concrete contractor and admixture manufacturer(s) indicating that the proposed mix design and placing, finishing, and curing techniques can produce the concrete properties and quality required by these specifications.

1.9 QUALITY ASSURANCE BY OWNER'S TESTING AGENCY

A. Quality assurance is testing and inspection to assist the Owner in evaluating the Contractor's performance.

B. Cost: Except as specifically noted otherwise, the testing agencies for quality assurance shall be engaged and paid by the Owner.

C. Coordination with Owner's Testing Agency: The Contractor shall have sole responsibility for coordinating their work with the testing agency to assure that all test and inspection procedures required by the Contract Documents and Public Agencies are provided. The Contractor shall cooperate fully with the Owner's Testing Agency in the performance of their work and shall provide the following:

1. Information as to time of starting field construction and concrete placement schedule, one week prior to the beginning of the work. This information shall be shared with the Architect.
2. Site File: At least one copy of each approved shop drawing shall be kept available in the contractor's field office. Drawings not bearing evidence of approval and release for construction by the Design Professionals shall not be kept on the job.
3. Full and ample means of assistance for testing and inspection of material
4. Proper facilities, including scaffolding, temporary work platforms, safety equipment etc., for inspection of the work in shop and field

D. Duties of the Owner's Testing Agency:

1. Reports: The Testing Agency shall prepare daily reports of the concrete work including progress and description/area of work, tests made and results. The daily reports shall be collected and delivered to the Design Professionals and Owner weekly
2. Rejection: The Owner's Testing Agency has the right to reject any material, at any time, when it is determined that the material or workmanship does not conform to the Contract Documents. The Testing Agency shall report deficiencies to Owner, Design Professionals, and Contractor immediately.
3. Remedial Work: The Testing Agency shall indicate to the Contractor where remedial work must be performed and will maintain a current list of work not in compliance with the Contract Documents. This list shall be submitted to the Design Professionals and Owner on a weekly basis.
4. Certification: When all work has been approved by the Testing Agency, the Testing Agency shall certify in a letter to the Design Professionals and Owner that the installation is in accordance with the design and specification requirements.

E. Source Quality Control

1. The Owner's Testing Agency shall conduct concrete quality evaluations for compliance with Specifications as follows:

   a. Review and test Contractor's proposed materials and certificates of compliance.
   b. Review and test Contractor's proposed concrete mix designs.
   c. Confirm production samples at plants or stockpiles are consistent with approved mix designs. Additionally confirm the following:

      1) Test for free water in aggregate
      2) Confirm supplier's documentation of compliance with ASTM standards for mix components
      3) Aggregates are from a single source throughout the project for exposed concrete
      4) Portland Cement is the same brand from a single source

d. Take one grab sample for each 100 tons of Portland cement except that, when used in bulk loading ready-mix plants where separate bins for pretested cement are not available, take grab samples for each shipment of cement placed in bin with not less than one sample being taken for each day's pour and subsequently test such samples if required by the Architect.

e. Test both coarse and fine aggregate by use of solution of sodium or magnesium sulfate, or both whenever in the judgment of the Architect such tests are necessary to determine quality of material. Perform such tests in accordance with ASTM C88. Loss shall not exceed 6-percent of either fine or coarse aggregate. Aggregate failing to comply with this requirement may be used in the Work provided it contains less than 2- percent of shale and other deleterious particles and shows a loss in soundness test of not more than 10-percent when tested in the sodium sulphate solution.

f. Test for sand equivalent of fine aggregate in accordance with California Test 217.

g. Test for cleanness value of coarse aggregate in accordance with California Test 227.

h. Inspect plant prior to any work to verify that batching and mixing operations comply with ASTM C94. This inspection includes at minimum the following:

1) Batch plant shall be certified to comply with the requirements of the National Concrete Ready Mix Association.
2) Ensure equipment and plant will afford accurate weighing, minimize segregation and will efficiently handle all materials to satisfaction of the Architect and the Owner's Testing Agency.
3) Replace at no additional expense equipment the Architect and the Owner's Testing Agency deem inadequate or unsuitable.
4) Plant is equipped with approved metering devices for determining moisture content of fine aggregate.
5) Other plant quality controls are adequate.

i. Continuously inspect quality and quantity of materials used in transit mixed concrete, in batched aggregates and ready-mixed concrete at mixing plant or other location per CBC Section 1916 and 17 where other materials are measured.

F. Field Quality Assurance

1. General: The Owner's Testing Agency shall test and inspect concrete materials and operations as Work progresses. Failure to detect any defective work or material shall not in any way prevent later rejection when such defect is discovered nor shall it obligate the Design Professional for final acceptance. Perform testing in accordance with ACI 318 and CBC Section 1903, 1905, 1916 and 17.

2. Owner's Testing Agency is responsible for monitoring concrete placement as follows:

a. Owner's Testing Agency shall provide qualified personnel at site to monitor concreting operations as follows:

1) Verify use of required design mix
2) Record location of point of concrete discharge of each batch truck tested, cross referenced to grid lines.
3) Record temperature of concrete at time of placement.
4) Record weather conditions at time of placement, including temperature, wind speed, relative humidity, and precipitation.
5) Record types and amounts of admixtures added to concrete batches, including that added after departure of concrete trucks from batch plant.

6) Record amounts of and monitor dosing of high-range water-reducing admixtures added at site for site-added admixtures and redosing for plant-added admixtures.
7) Record amounts of and monitor dosing of high-range water-reducing admixtures added at site for site-added admixtures and redosing for plant-added admixtures.
8) Record amount of water added at the site and verify that total water content does not exceed amount specified in the mix design. Addition of water at the site is subject to prior approval by the Design Professional.
9) Monitor consistency and uniformity of concrete.
10) Monitor preparation for concreting operations, placement of concrete, and subsequent curing period for conformance with Specifications for following procedures:

a) Concrete curing.

b) Hot weather concreting operations.

c) Cold weather concreting operations.

3. Owner's Testing Agency shall conduct tests of concrete as follows:

a. Testing frequency: Sample sets for all tests listed below of each concrete design mix placed each day shall be taken not less than once a day, nor less than once for each 50 cu.yd. of concrete, nor less than once for each 2500 square feet of surface area for slabs or walls. Additional tests shall be performed if deemed necessary by the Owner's Testing Agency and Design Professionals. Sample all columns, regardless of other frequencies listed above.
b. Obtain each test sample from different batches selected on a strictly random basis before commencement of concrete placement. Record location in structure of sampled concrete**.**
c. Determine air content of normal weight concrete in accordance with either ASTM C 231 or ASTM C 138. Determine air content of lightweight concrete in accordance with ASTM C 173.
d. Determine unit weight of normal weight concrete in accordance with ASTM C 138 and lightweight concrete in accordance with ASTM C 567.
e. For concrete with air content specified in Contract Documents, conduct one test for air content for each strength test required or for every 50 cubic yards of fly ash concrete placed, whichever is less. Test in accordance with ASTM C 173 or ASTM C 231.
f. The water content of freshly mixed concrete will be tested on a random basis, a minimum of once per 100 cubic yards or every 5000 square feet of concrete placement, during placement in accordance with AASHTO T 318 for the following concrete types:

1) Architecturally exposed hard troweled slabs
2) Slab to receive a bonded finish floor material
3) Concrete with specified compressive strength exceeding 6000 psi

g. Conduct slump tests in accordance with ASTM C 143 and ASTM C172. Take samples for slump test at the point of placement of concrete.
h. Conduct slump tests for concrete enhanced with high-range water-reducing admixtures as follows:

1) Concrete with plant added high-range water-reducing admixtures shall be sampled immediately upon arrival at job site. Batches delivered to site with slumps in excess of the range defined in the mix design submittal or with excessive segregation as defined in the ACI Manual of Standard Practice Part I shall be rejected.
2) Concrete with site added high-range water-reducing admixtures shall be sampled immediately upon arrival at job site and after addition of high-range water-reducing admixtures for conformance to initial water slump and final slump requirements.
3) Concrete shall also be sampled at point of initial discharge for conformance to slump and/or slump-flow requirements. Visually observe slump-flow at point of concrete placement. If slump loss is visually observed to exceed the range specified for mix design, perform additional slump test at point of discharge from concrete pump hose.

i. Conduct strength tests of concrete as follows:

1) Test concrete for required compressive strength in accordance with CBC Section 19056.
2) Secure sample sets in accordance with ASTM C 172.
3) Mold cylinders in accordance with ASTM C 31 and cure under standard moisture and temperature conditions in accordance with ASTM C 31, Section 7 (a). Quantity of cylinders listed below is based on a cylinder size of 4 inch diameter x 8 inches long. If 6 inch diameter by 12 inch long cylinders are used, the total quantity of cylinders may be reduced by one with two cylinders instead of three tested at the age designated for determination of f'c.
4) Transport specimen cylinders from job to laboratory after cylinders have cured for 24-hours on site.
5) Test cylinders in accordance with ASTM C 39. For specified concrete strength of 10,000 psi and above, cylinders shall be ground and not capped.
6) For 28 day mixes mold six cylinders. Test two cylinders at seven days and three cylinders at 28 days. The 28 day strength shall be the average of the three 28 day cylinders. One cylinder shall be retained in reserve for later testing if required.
7) For 56 day mixes mold seven cylinders. Test one cylinder at seven days, two cylinders at 28 days, and three cylinders at 56 days. The 56 day strength shall be the average of the three 56 day cylinders. One cylinder shall be retained in reserve for later testing if required.
8) For 90 day mixes mold eight cylinders. Test one cylinder at seven days, one at cylinder at 28 days, two cylinders at 56 days, and three cylinders at 90 days. The 90 day strength shall be the average of the three 90 day cylinders. One cylinder shall be retained in reserve for later testing if required.
9) When high early strength concrete is required by contractor, additional cylinders shall be made and tested as required at Contractor's expense.
10) If one cylinder in a test manifests evidence of improper sampling, molding or other damage, discard cylinder and base test results on that of remaining cylinder.

4. Owner's Testing Agency shall evaluate concrete for conformance with Specifications as follows:

a. Slump:

1) Owner's Testing Agency shall maintain a slump moving average, comprised of the average of all batches or most recent five (5) batches tested, whichever is fewer.

b. Strength test:

1) Owner's Testing Agency shall maintain a compressive strength moving average, comprised of three (3) consecutive strength test results, for each mix design used in Work.
2) Strength level of concrete will be considered satisfactory provided averages of all sets of three (3) consecutive strength test results (i.e. moving average) equal or exceed specified 28-day strength, and no individual strength test result falls below specified 28-day strength by more than 500 psi.
3) If strength tests fail to meet minimum requirements, concrete represented by such tests shall be considered questionable and shall, if deemed appropriate by the SER, be subject to further evaluation by core testing as specified herein.

c. Conduct core tests on questionable concrete in accordance with ACI 318 and ASTM C 42. Contractor to pay the Owner's Testing Agency for the cores.

1) Location of cores shall be coordinated with Design Professionals so as to least impair strength of structure. Before testing cores, discard and replace any that show evidence of having been damaged subsequent to or during removal from structure or which have reinforcement present.
2) Cores from structure exposed to soil or constant moisture in service (e.g. basement walls, retaining walls, slab-on-grade, piers, footings, etc.) shall be tested in a fully saturated condition. Cores for all other concrete may be tested dry. Prior to commencement of coring, verify with Design Professionals whether cores are to be tested wet or dry.
3) Fill core holes with low slump concrete or mortar with a strength equal to or greater than that specified for area cored.

d. Concrete in area represented by core test will be considered adequate if average strength of cores is equal to at least 85% of, and if no single core is less than 75% of, specified strength.

5. Floor flatness and levelness tolerance compliance testing is to be performed within 72 hours of concrete placement by Owner's Testing Agency, and prior to the removal of shores and forms.

G. Owner's Testing Agency shall submit inspection, observation, and/or test reports to the Owner and Design Professionals, as required herein and shall provide an evaluation statement in each report stating whether or not concrete placement conforms to requirements of Specifications and Drawings and shall specifically note deviations therefrom.
H. Immediately report deficiencies to the Contractor, Owner and Design Professionals.

1.10 QUALITY CONTROL BY CONTRACTOR

A. The Contractor shall provide a program of quality control to ensure that the minimum standards specified herein are attained. The Contractor shall bear burden of proof that concrete meets minimum requirements.
B. The Owner's general review during construction and activities of the Owner' Testing Agency are undertaken to inform the Owner of performance by the Contractor but shall in no way

replace or augment the Contractor's quality control program or relieve the Contractor of total responsibility for quality control.

C. The Contractor shall immediately report to the Design Professionals any deficiencies in the work which are departures from the Contract Documents. The Contractor shall propose corrective actions and their recommendations in writing and submit them for review by the Design Professionals. After proposed corrective action is accepted by the Design Professionals and Owner, the Contractor shall correct the deficiency at no cost to the Owner.

1.11 OBSERVATIONS AND CORRECTIONS BY DESIGN PROFESSIONALS

A. Review: The Design Professional will observe the construction for general compliance with the provisions of the Contract Documents during various phases of construction.

B. Compensation for Additional Services: Should additional work by Design Professionals such as design, drafting, meetings and/or visits be required which are necessitated by failure of the Contractor to perform the work in accordance with the Contract Documents, the Contractor is responsible for paying for the additional work at the Design Professionals' standard firm-wide billing rates plus out-of-pocket expenses incurred at cost + 10%. Additional costs for testing and inspection by the Owner shall also be compensated by the Contractor.

1.12 PERMITS AND WARRANTY

A. Permits: The Contractor shall apply for, procure, renew, maintain, and pay for all permits required by City, State, or other governing authorities, necessary to execute work under this Contract. Contractor shall furnish copies of all permits to the Owner and Design Professionals.

B. Warranty: Comply with General Conditions, agreeing to repair or replace specified materials or Work that has failed within the warranty period. Failures include but are not limited to the following:

1. Oily, waxy or loose residue which may interfere with the bonding or discoloration of various applied Architectural finish materials.
2. Discoloration of concrete surfaces scheduled to remain exposed as a finish.
3. Areas which show surface failure or defects.
4. Areas which puddle water.
5. Areas which are not properly prepared to receive Architectural finish materials. If necessary, the Contractor, at his own expense, shall have the Owner's Testing Agency perform appropriate tests for bond and discoloration.
6. Patches that become crazed, cracked or sound hollow when tapped.
7. Self-leveling concrete topping that has cracked, spalled and/or not performed in accordance with manufacturer's design criteria.

~~2.0 LEED REQUIREMENTS~~

- ~~See Division 1 Section "LEED Requirements" for additional LEED requirements.~~
- ~~LEED Submittals~~

  ~~0. Credit EQ 4.1, Low Emitting Materials, Adhesives & Sealants: Product data for curing compound and sealers that confirm VOC limits are not exceeded.~~

  ~~0. Credit MR 5.1 & 5.2, Regional Materials, Manufactured & Harvested / Extracted Locally – aggregates:~~

    - ~~Sourcing location(s): Indicate location of extraction, harvesting, and recovery; indicate distance between extraction, harvesting, and recovery and the project site.~~
    - ~~Manufacturing location(s): Indicate location of manufacturing facility; indicate distance between manufacturing facility and the project site.~~

- ~~Product Value: Indicate dollar value of product containing local/regional materials; include materials cost only.~~
- ~~Product Component(s) Value: Where product components are sourced or manufactured in separate locations, provide location information for each component. Indicate the percentage by weight of each component per unit of product.~~

~~0. Credit MR 5.1 & 5.2, Regional Materials, Manufactured & Harvested / Extracted Locally – water:~~

- ~~Sourcing location(s): Indicate location of extraction, harvesting, and recovery; indicate distance between extraction, harvesting, and recovery and the project site.~~
- ~~Manufacturing location(s): Indicate location of manufacturing facility; indicate distance between manufacturing facility and the project site.~~
- ~~Product Value: Indicate dollar value of product containing local/regional materials; include materials cost only.~~

~~0. Credit MR 5.1 & 5.2, Regional Materials, Manufactured & Harvested / Extracted Locally – cement:~~

- ~~Sourcing location(s): Indicate location of extraction, harvesting, and recovery; indicate distance between extraction, harvesting, and recovery and the project site.~~
- ~~Manufacturing location(s): Indicate location of manufacturing facility; indicate distance between manufacturing facility and the project site.~~
- ~~Product Value: Indicate dollar value of product containing local/regional materials; include materials cost only.~~

~~0. Credit MR 5.1 & 5.2, Regional Materials, Manufactured & Harvested / Extracted Locally – supplementary cementitious materials (SCM):~~

- ~~Sourcing location(s): Indicate location of extraction, harvesting, and recovery; indicate distance between extraction, harvesting, and recovery and the project site.~~
- ~~Manufacturing location(s): Indicate location of manufacturing facility; indicate distance between manufacturing facility and the project site.~~
- ~~Product Value: Contractor to indicate dollar value of product containing local/regional materials; include materials cost only.~~

~~0. Credit MR 4.1 & 4.2, Recycled Content - Fly ash:~~

- ~~Indicate recycled content; indicate percentage of pre-consumer and post-consumer recycled content per unit of product.~~
- ~~Indicate relative dollar value of recycled content product to total dollar value of product included in project.~~

~~0. Credit MR 4.1 & 4.2, Recycled Content - Ground Granulated Blast-furnace Slag:~~

- ~~Indicate recycled content; indicate percentage of pre-consumer and post-consumer recycled content per unit of product.~~
- ~~Indicate relative dollar value of recycled content product to total dollar value of product included in project.~~

~~0. Credit EQ 4.1, 4.2: VOC~~

- ~~Submit Product Data and material safety data sheets stating compliance with VOC limits for Curing and Sealing Compounds. Refer to Division 1/LEED Requirements for additional requirements.~~

~~PART 31 -~~ PART 2 - PRODUCTS

~~31.1~~2.1 CONCRETE MATERIALS & PRODUCTION

A. Portland Cement:

1. ASTM C150, Type I or Type II
2. ASTM C150, Type III, High-early Strength Portland Cement may be used subject to review and approval of Structural Engineer. The specified 28-day concrete compressive strength shall occur within 7 days for concrete using Type III Portland Cement.
3. ASTM C150, Type V or Type II/V
4. Provide the same brand of Portland Cement from a single source throughout the project, as required to meet Design Professionals' requirements.

B. Aggregates for Normalweight Concrete:

1. ASTM C 33
2. Coarse Aggregates: Crushed stone or gravel with a total water-soluble chloride ion content below 0.02%. It shall be free from oil, organic matter or other deleterious substances and shall not contain more than two percent by weight of shale or cherty material. "Cleanness value shall not be less than 75 when tested per MM Test Method, 227 and conforming to CBC Section 1903A.5
3. Fine Aggregate: Natural sand, or sand prepared from stone or gravel, clean, hard, durable, uncoated and free from silt, loam and clay. Sand equivalent shall be not less than 75 when tested as per ASTM D2419.
4. Combined Aggregate Gradation: Combined aggregate gradation for slabs and other designated concrete shall be 8% - 18% for large top size aggregates (1½ in.) or 8% - 22% for smaller top size aggregates (1 in. or ¾ in.) retained on each sieve below the top size and above the No. 100.
5. If the source of aggregates is changed during the Project, the Contractor shall supply test data showing that the new aggregates have a successful history of use with the portland cement used on the job.
6. Provide aggregates from a single source throughout the project for exposed concrete.
7. The acceptability of aggregates for the work will depend on proof that their potential alkali reactivity is not deleterious to the concrete.
8. Do not use fine or coarse aggregates that contain substances that cause spalling.
9. Maximum coarse aggregate size shall conform to the requirements as specified in ACI 301 but shall not exceed the following:

    a. Size no. 57 for footings, drilled piers and caissons, slabs-on-grade, and mass concrete
    b. Size no. 67 for all other locations
    c. Size no. 467 or 457 for non-reinforced concrete at locations noted on drawings.

10. Contractor shall furnish concrete with maximum 3/8" aggregate at no additional cost to the Owner if areas of high reinforcement density require it for placement and consolidation.
11. Frozen aggregates shall not be permitted.

C. Aggregates for Lightweight Concrete:

1. ASTM C 330.
2. Expanded shale type with cleanliness value and sand equivalent not less than 75.
3. Classification of Aggregates: As required to meet Design Professionals' requirements.

4. Provide aggregates from a single source throughout the project for exposed concrete.
5. Aggregate shall contain the minimum absorbed moisture content recommended by the manufacturer for the project prior to batching.
6. Maximum coarse aggregate size shall conform to the requirements as specified in ACI 301 but shall not exceed ¾".

D. Water: ASTM C 94. Clean, and free from injurious amounts of oil, acids, alkali, salts, organic material, or other deleterious materials.

E. Supplementary Cementitious Material

1. Fly Ash:

   a. ASTM C 618, Class C or Class F.
   b. Shall not be used unless part of an approved mix design.
   c. Limit Loss on Ignition to 2.5%

2. Ground Granulated Blast-furnace Slag (GGBFS)

   a. ASTM C 989 Grade 100 or Grade 120.
   b. Shall not be used unless part of an approved mix design.

3. Silica Fume (Microsilica):

   a. ASTM C 1240
   b. Example acceptable products:

      1) "Force 10,000"; W.R. Grace & Co.
      2) "Eucon MSA"; The Euclid Chemical Co.
      3) "Rheomac SF100"; BASF.
      4) Sika Corporation "Sikacrete 950 DP"

4. Limit the maximum content of supplementary cementitious materials for concrete exposed to deicing chemicals to values shown in ACI 318, Table 4.2.3
5. The exact percentages used shall be based on successful test placement on site. Resubmit mix design if percentages change based on test placement.
6. The fly ash or natural pozzolan supplier shall have an effective quality control program in place to guard against contamination of the fly ash and assure compliance with specifications.
7. Fly ash and GGBFS used shall be from one source throughout the project. Substitution of sources will be acceptable only if testing of concrete mixes containing the substituted material show similar test results and if the color of concrete produced with the substituted material matches the color of previously poured concrete to the satisfaction of the Architect.

F. Ready Mixed Concrete:

1. Shall be batch-mixed and transported in accordance with ASTM C 94.

~~31.2~~2.2 CONCRETE MIX DESIGN

A. Concrete Strength:

1. Shall be as indicated on the Structural Drawings
2. Mix shall be designed, tested, and adjusted if necessary in ample time before first concrete is scheduled to be placed.

B. Concrete Density (Unit Weight):

1. Shall be as indicated on the Structural Drawings.

2. The range for lightweight concrete shall be +/- 3 pcf of the density specified in the General Notes.

C. Air Entrainment

1. For concrete exposed to freeze/thaw cycles or deicing chemicals, and concrete intended to be watertight, provide entrained air content of 6% ± 1.5%, unless specified otherwise. This includes, but is not limited to, concrete at the following locations:

   a. Concrete at the exterior of the structure with at least one surface exposed to weather, such as exterior face of grade beams and foundation walls.
   b. Concrete in parking garages.
   c. Ramps and loading docks.

2. For lightweight concrete less than 120 pscf density, air content may be up to 7% regardless of exposure condition.
3. For concrete with a specified compressive strength (f'c) greater than 5000 psi, required air content may be reduced to 5% ± 1.5%.
4. Entrained air content noted above shall occur at point of delivery.
5. No entrained air content is required in concrete placed in the foundation with no surface exposed to weather.
6. All interior steel trowel finished, normalweight slabs shall have a maximum air content of 3%.

D. Water-Cementitious Materials (W/cm) Ratio for Normalweight Concrete

1. Unless lower limits are stated in the contract documents, all concrete exposed to freezing and thawing in moist condition and/or required to be watertight or used in slabs-on-grade shall have a maximum W/cm ratio of 0.45.

   a. Where the above mixes are to be pumped, water-reducing admixture (low- or high-range as required) shall be used.

2. All concrete exposed to deicing salts, brackish water seawater or spray from these sources shall have a maximum W/cm ratio of 0.40.
3. Absent the above conditions, all concrete with required strength of 4000 psi or higher shall have a maximum W/cm ratio of 0.50.
4. The water-cementitious materials ratio shall not exceed values indicated, including any water added to meet specified slump in accordance with the requirements of ASTM C 94.
5. Weight of fly ash or pozzolanic admixtures shall be included with the weight of cementitious materials used to determine the water-cementitious materials ratio.

E. Slump

1. Concrete design mixes shall be proportioned to meet the following slump limitations. Slump should be measured as described in the owner's testing agency responsibilities:

   a. Concrete without high range water-reducing admixture: 4" +/-1" maximum.
   b. Concrete for drilled piers: 6" +/-1" maximum.
   c. Concrete with high range water-reducing admixture: Concrete slump prior to addition of high range water-reducing admixture shall not exceed 3" for normal weight concrete and 4" for lightweight concrete. After addition of water-reducing admixture, the concrete shall have a maximum slump of 9" unless otherwise approved by the SER.

F. Shrinkage Limit

1. Proportion all concrete for a maximum allowable length change of 0.04% measured at 28 days after curing in lime-saturated water for seven days in accordance with ASTM C 157 (using air storage thereafter).

G. Chloride Ion Content

1. The total water-soluble chloride ion content of the mix including all constituents shall not exceed the limits defined in ACI 318 4.4 unless corrosion inhibiting admixtures are added to the mixture to offset the additional chloride.
2. If the specified level of water-soluble chloride ion content cannot be maintained, appropriate level of corrosion inhibiting admixture shall be added to the mix in accordance with the manufacturer's recommendation to offset the excess amount of chloride at no additional cost to the Owner.

H. Durability Requirements

1. Where concrete is noted as "durable" on contract documents, limit chloride ion permeability to [1200] coulombs, when tested at 56 days according to either ASTM C 1218, AASHTO T259, or AASHTO T277.

~~31.3~~2.3 ADMIXTURES

A. General:

1. Admixtures specified below can be used only when established in the mix design with Design Professionals' prior written approval.
2. Each admixture approved by Design Professionals shall be used in strict compliance with manufacturer's published instructions.
3. Concrete supplier shall certify all admixtures to be compatible with each other. (See Submittals Section in Part 1)

B. Air Entraining Admixture:

1. ASTM C 260
2. Example acceptable product: BASF "MICRO-AIR" or "MB-AE-90"
3. Example acceptable product: W. R. Grace's "Darex Series" or "Daravair Series"
4. Example acceptable product: Euclid Chemical's "AEA –92 or Air 40".
5. Sika Corporation "Sika Air Series" or "Sika AEA Series"

C. Low-Range Water-Reducing Admixture:

1. ASTM C 494, Type A, non-lignin sulfonate.
2. Example acceptable product: BASF' "POZZOLITH 220-N"
3. Example acceptable product: Euclid Chemical's "EUCON NW" or "EUCON WR 91"
4. Example acceptable product: W. R. Grace's "WRDA' Series or "Zyla" Series
5. Example acceptable product: Sika Corporation "Plastocrete Series"

D. Retarding Admixture:

1. ASTM C 494, Type B
2. Example acceptable product: BASF POZZOLITH 100-XR"
3. Example acceptable product: The Euclid Chemical Company "EUCON RETARDER 100"
4. Example acceptable product: W. R. Grace's "Daratard 17"
5. Example acceptable product: Sika Corporation "Plastiment Series"

E. Non Corrosive Accelerating Admixture:

1. ASTM C 494, Type C

2. Example acceptable product: BASF "POZZUTEC 20
3. Example acceptable product: The Euclid Chemical Company “ACCELGUARD 80”, “ACCELGUARD NCA” or “ACCELGUARD 90”
4. Example acceptable product: W. R. Grace’s “Daraset” Series, “Polarset”, or “DCI”
5. Example acceptable product: Sika Corporation “Sikaset NC” or “Plastocrete 161 FL” or “Sika Rapid-1”

F. Water-Reducing and Retarding Admixture:

1. ASTM C 494, Type D
2. Example acceptable product: BASF "POZZOLITH 100-XR"
3. Example acceptable product: The Euclid Chemical Company “EUCON RETARDER 75” or “EUCON DS”
4. Example acceptable product: W. R. Grace’s “Daratard 17”
5. Example acceptable product: Sika Corporation “Plastiment Series”

G. Water-Reducing and Accelerating Admixture:

1. ASTM C 494, Type E
2. Example acceptable product: BASF "POZZUTEC 20
3. Example acceptable product: The Euclid Chemical Company “ACCELGUARD 80” or “ACCELGUARD 90”
4. Example acceptable product: W. R. Grace’s “Libricon NCA”
5. Example acceptable product: Sika Corporation “Sikaset NC” or “Plastocrete 161 FL”

H. Mid-Range Water-Reducing Admixture:

1. ASTM C 494, Type A
2. Example acceptable product: W. R. Grace’s “Daracem” or “Mira” Series
3. Example acceptable Product: Sika Corporation “Sikaplast Series”
4. Example acceptable Product: Euclid Chemical Company: “Eucon MR” or “Eucon MRX”

I. High-Range Water-Reducing Admixture (Super-plasticizer):

1. ASTM C 494, Type F
2. Example acceptable product: BASF "RHEOBUILD 1000" or “GLENIUM SERIES”
3. Example acceptable product: Euclid Chemical’s “EUCON 37” or “PLASTOL SERIES”
4. Example acceptable product: W. R. Grace’s “Daracem” or “ADVA” Series
5. Example acceptable product: Sika Corporation “Viscocrete Series” or “Sikament Series”

J. High-Range Water-Reducing and Retarding Admixture (Super-plasticizer):

1. ASTM C 494, Type G
2. Example acceptable product: The Euclid Chemical Company “EUCON 537”
3. Example acceptable product: W. R. Grace’s “Daracem 100”

K. Viscosity Modifying Admixture (VMA) for Self-Consolidating Concrete (SCC):

1. Example acceptable product: BASF “Rheomac VMA”
2. Example acceptable product: Sika Chemical “Sika Stabilizer VMA”
3. Example acceptable product: W.R. Grace “V-MAR3”
4. Example acceptable product: “EUCON ABS” or “EUCON WO”, The Euclid Chemical Company
5. Example acceptable product: Sika Corporation “Sika Stabilizer Series”

L. Corrosion Inhibiting Admixtures:

1. ASTM C 494, Type C, 30% $\pm$ 2% solution of Calcium Nitrite

2. Example acceptable product: W.R. Grace's "DCI or DCI-S'
3. Example acceptable product: The Euclid Chemical Company's "EUCON CIA"
4. Example acceptable product: Sika Chemical "Sika CNI"

M. Shrinkage Reducing Admixtures:

1. ASTM C 157
2. Example acceptable product: W.R. Grace's "ECLIPSE 4500", or "ECLIPSE FLOOR"
3. Example acceptable product: The Euclid Chemical Company's "EUCON SRA"
4. Example acceptable product: Sika Corporation "Sika Control 40"

~~31.4~~2.4 ADHESIVES

A. Bonding Agent for Cured Concrete:

1. ASTM C 881 Type I and IV, Grade 3, Class B and C.
2. Example acceptable product: BASF "CONCRESIVE PASTE (LPL)" , Class C Only
3. Example acceptable product: Euclid Chemical's "EUCO #452 EPOXY SYSTEM".
4. Example acceptable product: Euclid Chemical's "DURALCRETE SERIES".
5. Example acceptable product: Sika Corporation "Sikadur 31 Hi-Mod Gel (1:1 Mix Ratio)

B. Bonding Agent for Uncured Concrete:

1. ASTM C 881, Type II and V, Grade 2, Class B and C.
2. Example acceptable product: BASF "CONCRESIVE LIQUID (LPL)" , Class C Only
3. Example acceptable product: Euclid Chemical's "FLEXOCRETE SYSTEM".
4. Example acceptable product: Euclid Chemical's "DURALCRETE SYSTEM".
5. Example acceptable product: Sika Corporation "Sikadur 32 Hi-Mod"

C. Anti-Corrosive Epoxy Cementitious Bonding Compound:
This adhesive shall be a water-based epoxy/cementitious compound for adhesion and corrosion protection of reinforcing members (20 hour maximum open time).

1. Example acceptable products: "DURALPREP AC" by The Euclid Chemical Co.
2. Example acceptable products: "ARMATEC 110" by Sika Chemical Co.

~~31.5~~2.5 CURING COMPOUNDS AND SEALERS

A. Interaction with finishes:

1. See architectural drawings for finish material applied over concrete.
2. Use only curing and sealer compounds that are compatible with finish material.
3. Manufacturer's certification is required.
4. Where finish material is liquid rubberized asphalt, use only strippable type curing compound.

B. Curing and Sealing Compound (VOC Compliant, 350 g/l) :

1. ASTM C1315, Type I, Class A and ASTM C 309, Type I, Class A or B
2. Example acceptable product: Euclid Chemical's "Super Diamond Clear VOX"
3. Example acceptable product: Euclid Chemical's "Super Aqua Clear VOX"
4. Example acceptable product: Symons "Kure 1315"
5. Example acceptable product: Sonneborn "Cure & Seal 1515 UV"
6. Example acceptable product: Creteseal "New Pour CS2000"
7. Liquid type membrane-forming curing compound, clear styrene acrylate type.

C. Curing Compound (Strippable):

1. ASTM C 309, Type I, Class A or B
2. Example acceptable product: Euclid Chemical's "Kurez RC VOX or "Kurez RC Off".

~~31.6~~2.6 SEALERS

A. Surface Sealer:

1. ASTM C 309, Type I, Class A or B, no stearates, no darkening or change of color allowed.
2. Example acceptable product: Euclid Chemical's "DIAMOND CLEAR VOX"
3. Example acceptable product: Sonneborn "Kure-N-Seal W"
4. Example acceptable product: Symons "Spec-Cure C309"

B. Liquid Densifier/Sealer:

1. The liquid densifier compound shall be a siliconate based sealer which penetrates concrete surfaces, increases abrasion resistance and provides a "low-sheen" surface that is easy to clean and eases the problem of tire mark removal. The compound must contain a minimum solids content of 20% of which 50% is siliconate. No stearates, no darkening or change of color.
2. Example acceptable product: The Euclid Chemical Company "Euco Diamond Hard"
3. Example acceptable product: Sonneborn "Kure-N-Harden"

C. Wax Sealer:

1. Heavy penetrating type as manufactured by approved manufacturer of clear hardener.

~~31.7~~2.7 HARDENERS

A. Mineral Aggregate Hardener:

1. The specified mineral aggregate hardener shall be formulated, processed and packaged under stringent quality control at the manufacturer's owned and controlled factory. The hardener shall be a factory-blended mixture of specially processed graded mineral aggregate, selected Portland cement and necessary plasticizing agents
2. Example acceptable product: The Euclid Chemical Company's, "Surflex"
3. Example acceptable product: BASF', "Mastercron"
4. Curing Compound: Euclid Chemical, "Kurez DR VOX" (for use with "Surflex")
5. Curing Compound: BASF, "Masterkure 200W" (for use with "Mastercron")

B. Non-Oxidizing Metallic Hardener:

1. The specified non-oxidizing metallic floor hardener shall be formulated, processed and packaged under stringent quality control at the manufacturer's owned and controlled factory. The hardener shall be a mixture of specially processed non-rusting aggregate, selected Portland Cement and necessary plasticizing agents.
2. Example acceptable product: The Euclid Chemical Company's, "Diamond-Plate"
3. Example acceptable product: BASF, "Lumiplate" (for flat floor applications).
4. Curing Compound: Euclid Chemical, "Kurez DR VOX" (for use with "Diamond-Plate")
5. Curing Compound: BASF, "Masterkure 200 W" (for use with "LumiPlate")

~~31.8~~2.8 MISCELLANEOUS CONCRETE PRODUCTS

A. Nonshrink Grout

1. Provide pre-packaged natural aggregate grout, high-precision, nonshrink, ready-to-use, complying with the following requirements:

   a. See General Notes for grout minimum compressive strength.
   b. Grout shall conform to ASTM C 1107, Grade B

2. All material used including water, mixer and pre-packaged grout must be initially at the 45°F and 90°F limits when testing is initiated.
3. Example acceptable product: BASF "MASTERFLOW 928"
4. Example acceptable product: Euclid Chemical's "HI-FLOW GROUT"
5. Example acceptable product: Five Star Products "Five Star Grout"
6. Example acceptable product: Sika Chemicals "Sikagrout 328"

B. Self-Leveling Concrete Topping - Underlayment for Interior Applications:

1. Use self-leveling underlayment concrete formulated to level concrete floors without shrinking, cracking or spalling, and capable of being placed from feathered edge to 1" thickness without aggregate in one pour. If greater than 1" thickness is required, aggregate shall be used in accordance with manufacturer's requirements. Appropriate primer shall be utilized for all underlayment applications.
2. Example acceptable product: Ardex Engineered Cements "ARDEX K-15"
3. Example acceptable product: Euclid Chemical's "Flo-Top or Super Flo-Top"
4. Example acceptable product: Sika Corporation "Sika Level Series"

~~31.9~~2.9 MISCELLANEOUS PRODUCTS

A. Evaporation Retarder:

1. Example acceptable product: BASF "CONFILM"
2. Example acceptable product: Euclid Chemical "Eucobar".
3. Example acceptable product: Sika Corporation "Sika Film"

B. Moisture-Retaining Covers:
Conforming to ASTM C171. A naturally colored, non-woven polypropylene fabric with a 4-mil non-perforated reflective (white) polyethylene coating containing stabilizers to resist degradation from ultraviolet light. Fabric shall exhibit low permeability and high moisture retention and be fungus resistant.

1. .Hydracure S-16 by PNA Construction Technologies, Inc., Matthews, NC
2. Transguard 4000 by Reef Industries (Armorlon Division), Incorporated, Houston TX

C. Sand Cushion: Clean, manufactured or natural sand.
D. Structural Polystyrene used as Typical Fill

1. Material: Extruded polystyrene foam insulation board.
2. Comply with the requirements of ASTM C 578, Type IV or VI.
3. Compressive strength, 25 psi at 0.1-inch deformation when tested in accordance with ASTM D 1621.
4. Flexural strength, 50 psi, ASTM C 203.
5. Thickness as indicated on drawings.
6. Example acceptable product: Styrofoam Deckmate Plus, The Dow Chemical Company
7. Example acceptable product: FOAMULAR 400, Owens Corning.

E. Structural Polystyrene used as Fill for Wheel Load Applications

1. Material: Rigid cellular polystrene thermal insulation with closed cells formed by expansion of polystrene base resin in an extrusion process.

2. Comply with the requirements of ASTM C 578, Type V.
3. Compressive strength, 100 psi, ASTM D 1621.
4. Compressive modulus, min 3700 psi, ASTM D 1621.
5. Flexural strength, 100 psi, ASTM C 203.
6. Thickness as indicated on drawings.
7. Example acceptable product: STYROFOAM Highload 100, The Dow Chemical Company
8. Example acceptable product: FOAMULAR 1000, Owens Corning.

F. Vapor Retarder: See Division 7, Thermal and Moisture Protection

1. [Minimum 15-mil thick polyolefin geomembrane
2. Manufactured with prime virgin resins
3. Water Vapor Retarder: ASTM E 1745, meets or exceeds Class A
4. Water Vapor Transmission Rate: ASTM E 96, 0.008 gr./ft^2/hr. or lower
5. Permeance Rating: ASTM E 96, 0.03 Perms or lower for new material and after conditioning tests in accordance with applicable sections of ASTM E 154
6. Puncture Resistance: ASTM E 1745,minimum 2400 grams
7. Tensile Strength: ASTM E 1745, minimum 45.0 lbs./in.
8. Example acceptable product: W.R.Grace's "Florprufe 120"
9. Example acceptable product:W. R. Meadows, "Perminator"
10. Example acceptable product: Stego Industry LLC, "Stego Wrap"
11. Example acceptable product: Raven Industries, "Raven Vapor Block 15".]

G. Non-Slip Aggregate:

1. Abrasive aggregate shall be composed of an aluminum oxide abrasive bonded by a vitreous ceramic material. Use hard, homogeneous, non-glazing, rustproof aggregate which is unaffected by moisture or cleaning compounds.
2. Example acceptable product: Euclid Chemical Company "NON-SLIP AGGREGATE"
3. Example acceptable product: "Alundum" by North Company
4. Example acceptable product: Anti-Hydro International "A-H A-2 Emery Shake-On"
5. Example acceptable product: Anti-Hydro International "A-H Alox" by Anti-Hydro International Abrasive

H. Semi Rigid Joint Filler:

1. Example acceptable product: Euclid Chemical "Euco 700"
2. Example acceptable product: Euclid Chemical "Euco QWIKjoint 200"
3. Example acceptable product: Sika Chemical Corporation "Sikadur 51 SL"

I. Dowels:

1. Example acceptable product: Diamond Plate Dowels: PNA's "Diamond Dowel System."

~~31.10~~2.10 CONCRETE REPAIR MATERIALS

A. Polymer Repair Mortar

1. The following patching mortars may be used when color match of the adjacent concrete is not required. Prior approval by the Design Professionals is required.
2. Example acceptable products (Horizontal Repairs): "Thin Top Supreme or Tammspatch II" by Euclid Chemical Company (for 1/16" to 3/8" thickness), or "Concrete Top Supreme" (for 3/8" to 2" thickness).
3. Example acceptable products (Horizontal Repairs): "Sikatop 121 Plus" or "Sikatop 122 Plus" by Sika Chemical Corporation.

4. Example acceptable products (Vertical and Overhead Repairs): Verticoat, Verticoat Supreme, or Duraltop gel by Euclid Chemcial Corporation
5. Example acceptable products (Vertical and Overhead Repairs): Chemical Corporation's, "Sikatop 123 Plus" by Sika Chemical Corporation.
6. Example acceptable products: Degussa's, "EMACO R" Series.

B. High Strength Flowing Repair Mortar

1. For forming and pouring structural members, or large horizontal repairs, provide the flowable one-part, high strength microsilica modified repair mortar with 3/8" aggregate.
2. The product shall achieve 9000 psi @ 28-days at a 9-inch slump.
3. Prior approval by the Design Professionals is required for cold weather applications
4. Example acceptable product: The Euclid Chemical Company's, "Eucocrete"
5. Example acceptable product: Degussa's, "EMACO S" Series.
6. Example acceptable product: Sika Corporation "Sika Repair 211 SCC Plus"

C. Repair Topping

1. Latex and microsilica modified cementitious mortar topping, which meets or exceeds the bond strength requirements of ASTM C 1059.
2. Resistance to wear: The finished topping shall show a depth of wear of 0.02 mm (0.0079") or less when tested at 28 days with a Chaplin Abrasion Tester.
3. Example acceptable product: The Euclid Chemical Company, "Thin-Top Supreme or Tammspatch II"

~~0.~~ Example acceptable product: Sika Corporation "Sika Repair 211 SC Plus"

~~0. LEED REQUIREMENTS~~

~~0. LEED Credit MR 5.1, 5.2 Regional Materials, Manufactured & Harvested / Extracted Locally: Extraction and fabrication facility for all aggregates shall be within 500 miles of project site.~~

~~0. LEED Credit MR 4.1, 4.2 Recycled Content: Weight of fly ash or slag is limited to a maximum of 50% of the total cementitious material content for foundations, walls and columns.~~

~~0. Sealers: Products must meet VOC requirements of LEED Credit EQ 4.2. See Division 1, LEED Requirements for additional requirements.~~

~~0. Curing Compounds: Products must meet VOC requirements of LEED Credit EQ 4.2. See Division 1, LEED Requirements for additional requirements.~~

~~0.~~4. ~~See Division 1 Section "LEED Requirements" for additional LEED requirements~~.

~~PART 32~~ PART 3 - EXECUTION

~~32.1~~3.1 PREPARATION

A. General:

1. Ensure availability of sufficient labor, equipment and materials to place concrete correctly in accordance with scheduled casting. Verify conveying equipment is clean and properly operating.
2. Confirm that the Architect has reviewed formwork and reinforcing steel and that preparations have been checked with the Project Inspector.
3. Protect finished surfaces adjacent to concrete-receiving places.
4. Clean transportation and handling equipment at frequent intervals and flush thoroughly with water before each day's run. Do not discharge wash water into concrete form.

B. Subgrade:

1. Dampen subgrades not covered with membrane by sprinkling immediately before placing concrete. Do not saturate.

   a. Omit when subgrade is already damp.

2. Do not place on water-saturated subgrade unless placing can be done without damage to subgrade (surface is stable) and loading the subgrade does not drive free water to the surface.
3. Do not place concrete on frozen ground.
4. Verify depths of depressed slab conditions are correct for delayed finish noted and for proper bonding to concrete.

C. Forms:

1. Coordinate with Section 03 10 00 Concrete Formwork.
2. Verify that construction of formwork is complete and form ties at construction joints are tight.
3. Remove dirt, sawdust, nails and other foreign material from formed space.
4. Dampen wood forms by sprinkling immediately before placing.
5. Cool metal forms by sprinkling immediately before placing.

D. Concrete Accessories:

1. Coordinate with Section 03 10 00 Concrete Formwork.
2. Ensure required reinforcement, inserts, and embedded items are in place.

E. Dewatering:

1. Remove water from concrete formwork.
2. Divert any flowing water to sump and remove by pumping.
3. Refer to Division 1 for additional dewatering requirements.

F. Vapor Retarder Placement:: See Division 7, Thermal and Moisture Protection.

1. [Vapor retarder installation shall be in accordance with manufacturer's instructions and ASTM E 1643.
2. Place vapor retarder under slabs-on-grade in position with longest dimension parallel with direction of pour.
3. Joints: Lap 6" minimum and seal with manufacturer's recommended mastic or pressure-sensitive tape.
4. Prevent damage to moisture barrier.
5. If moisture barrier is damaged, place a piece of moisture barrier over damaged area (6" larger all around) and tape in place with type of tape recommended by moisture barrier manufacturer.
6. Seal laps and intersections of walls with compatible trowel mastic or pressure-sensitive sealing tape.
7. Seal around pipes and other penetrations with compatible trowel mastic.
8. The vapor barrier must be approved prior to concrete placement.]

~~32.2~~3.2 JOINTS IN CONCRETE

A. Locate construction and contraction joints as indicated on Drawings and on approved joint location submittal.

1. Do not use contraction joints in framed floors or composite slabs.
2. Locate and install construction joints so they do not impair strength or appearance of the structure, as acceptable to Design Professionals.
3. Coordinate location of construction and contraction joints with locations of joints in finish materials where they exist.

a. Construction and contraction joints in slabs or slab on grade with terrazzo finish must be reviewed and approved by the Design Professionals.

B. Construction Joints:

1. Construction joints shall be located within the central third of the span. Any concrete spilling over or through the bulkhead shall be removed at the completion of the pour. All surfaces of the concrete shall have reinforcing extending through the joint.
2.
3. Horizontal Joints: Horizontal construction joints other than those shown on the drawings will not be permitted unless approved by the Architect.
4.
5. Joint Preparation: Forms shall be removed in time to permit roughening of construction joints of structural members by chipping and wire brushing to remove all loose and foreign material. The joints shall be dampened prior to depositing concrete. Where designated in the Construction Documents, the specified bonding compound shall be applied, and new concrete shall be placed while the bonding grout or epoxy adhesive is still tacky. The anti-corrosive epoxy cementitious adhesive has a 20-hour open time.

C. Isolation Joints:

1. Interrupt structural continuity resulting from bond, reinforcement or keyway at points of contact between slabs-on-grade and vertical surfaces, such as column pedestals, foundation walls and other locations, as indicated.

D. Contraction (Control) Joints in Floor Slabs-on-Grade:

1. Space joints at 36 times slab thickness unless a smaller spacing is indicated on the Drawings, located to conform to bay spacing wherever possible (at column centerlines, half bays, third bays).
2. Maximum slab area controlled by jointing is 400 square feet.
3. Contraction joints can be provided by sawcuts 1/8” by ¼ slab depth, formed joints or appropriately detailed construction joints.
4. Sawcuts shall be made as soon as possible after slab finishing as may be safely done without dislodging aggregate or breaking edges. The Soff-Cut saw shall be used to a depth of ¼ of slab thickness immediately after final finishing. Conventional saw shall be used as soon as possible after final finish without raveling to a depth as indicated on the drawings.
5. Where contraction joints coincide with construction joints, detail joint as indicated on drawings.

E. Joint Fillers: Coordinate with Section 03 20 00 Concrete Reinforcement and Embedded Assemblies and Division 7 requirements.

~~32.3~~3.3 MIXING

A. Measurement of Materials: Conforming to ASTM C 94
B. Mixing: All concrete shall be ready-mixed conforming to ASTM C 94 except as follows:

1. Provide concrete materials, proportions and properties as herein specified in lieu of ASTM C 94.
2. Method of mixing shall comply with CBC Section 1905.8.
3. Adjust grading to improve workability; do not add water at batch plant unless otherwise directed.
4. Measure fine and coarse aggregates separately according to approved method that provides accurate control and easy checking.

5. Thoroughly clean concrete equipment before use for architectural concrete mixes to avoid contamination.
6. Use automatic metering dispenser to introduce admixture into mix. Dispenser shall be recommended and calibrated by admixture manufacturer.
7. Water, beyond that required by the mix design, shall not be added at the Project site. Addition of water at the Project site shall be made only in the presence of the Owner's Testing Agency.
8. Furnish delivery ticket with each load of concrete delivered to the site to the Contractor conforming to the requirements of ASTM C 94.
9. Mix concrete in transit mixers five minutes immediately prior to discharge in addition to mixing as called for by ACI 304 and ASTM C94.

C. High range water reducing agents (superplasticizer), if added at the batch plant, may be added again at the Project site.

1. If superplasticizers are added at the batch plant, the concrete mix design must account for the delivery time, workability, finishability, and setting time required on the jobsite for proper placing and finishing procedures.
2. If the superplasticizer is redosed at the jobsite in air entrained concrete, air content must be checked after mixing.

D. Discharge of the concrete shall be completed within 1-1/2 hours or before the drum has revolved 300 revolutions, whichever comes first, after the introduction of the mixing water to the cement and aggregates or the introduction of the cement to the aggregates.

~~32.4~~3.4 CONCRETE PLACEMENT

A. Prior to Concrete Placement:

1. Mechanical vibrators are required and must be available for placing concrete. Ensure availability of spare vibrators in case of failures.
2. Place no concrete where weather conditions prevent proper finishing and curing.
3. Remove debris from space to be occupied with concrete.
4. Notify Design Professionals and Owner’s Testing Agency 48 hours prior to starting concrete placement.
5. Approved mix designs must be maintained on file in Contractor's Field Office.
6. Reinforcement and accessories shall be in proper locations, clean, free of loose scale, dirt or other foreign coatings that may reduce bond to concrete, and in accordance with Section 03 20 00 and Drawings.
7. Fog spray forms, reinforcing steel, and subgrade just before pouring concrete.
8. Do not place concrete having a slump outside of allowable slump range.
9. Place concrete before initial set has occurred, but in no event after it has been discharged from the mixer more than 30 minutes. All concrete shall be placed upon clean, damp surfaces, free from puddled water, or upon properly consolidated fills, undisturbed soil or lean concrete with a minimum strength of 1500 psi. Placement upon soft mud or dry earth is not permitted.
10. Unless adequate protection is provided, concrete shall not be placed during rain.
11. Rain water shall not be allowed to increase mixing water or to damage the surface finish.
12. Do not use aluminum equipment in placing and finishing concrete.
13. Keep subgrade moisture uniform without puddles or dry areas.
14. Place vapor retarder directly below slabs on grade as specified in contract documents.

B. For Conduits and Pipes Embedded in Concrete:

1. For concrete slab, wall, beam or column, conform to requirements of ACI 318, Chapter 6. For variations from these requirements, submit a written request for Design Professionals' review and response.
2. Conduits and pipes shall not be embedded in concrete slabs on steel deck without approval of Design Professional.
3. Provide sleeves for pipes passing vertically through concrete.
4. Do not embed aluminum materials.
5. Do not cut, bend or displace the reinforcement to facilitate placement of embedded pipes and conduits.

C. Pumping: Pumping shall be done in strict accordance with ACI 304.2R.

1. The Contractor shall demonstrate that the pumping equipment has a record of satisfactory performance under similar conditions and using a similar mix.

D. Placing Concrete in Forms:

1. Clean and prepare forms as specified in Section 03 10 00/Concrete Formwork.
2. Place concrete continuously without interruption between predetermined construction and contraction joints in walls.
3. Deposit concrete in forms in horizontal layers no deeper than 24" and in a manner to avoid inclined construction joints. Level top surface upon stopping work.
4. Where placement consists of several layers, place each layer while preceding layer is still plastic to avoid cold joints.
5. Avoid free falls in excess of six feet where reinforcement will cause segregation and in typical conditions unless the Architect approves otherwise.
6. Consolidate placed concrete by mechanical vibrating equipment supplemented by hand-spading, rodding or tamping.

    a. Use equipment and procedures for consolidation of concrete in accordance with ACI 309R.

7. Do not use vibrators to move fresh concrete laterally inside forms from discharge point; shift discharge point as needed.
8. Insert and withdraw vibrators vertically at uniformly spaced locations no farther than the visible effectiveness of the machine to achieve timely consolidation around reinforcement, embedded items and into corners of forms.
9. Place vibrators to rapidly penetrate placed layer and at least 6" into preceding layer.
10. Do not insert vibrators into lower layers of concrete that have begun to set.
11. At each insertion, limit duration of vibration to time necessary to consolidate concrete and complete embedment of reinforcement and other embedded items without causing segregation of mix.

E. Placing Concrete Slabs:

1. Place concrete continuously without interruption between predetermined construction and contraction joints in floors.

    a. Place slabs on grade by the long strip cast method. Refer to ACI 302.1R for recommended methods of placement.

2. Deposit and consolidate concrete slabs in a continuous operation, within limits of construction joints, until completing placement of a panel or section. Employ mechanical vibrating equipment in accordance with ACI 309R as required to achieve thorough consolidation.
3. Consolidate concrete during placing operations so that concrete is thoroughly worked around reinforcement, other embedded items and into corners.
4. Bring slab surfaces to correct level with a straightedge and strike off.

a. Use highway straight edges, bullfloats or darbies to smooth surface free of humps or hollows.
b. Do not disturb slab surfaces prior to beginning finishing operations.

5. Maintain reinforcing in proper position on chairs during concrete placement.
6. Do not place materials on slabs or impose loads during period of setting.
7. Take precautions to avoid damage to under-slab moisture barrier and displacement of reinforcement and formwork.

F. Placing Concrete on Steel Decks

1. Exercise care during concrete placement on steel decks to prevent concentrated loads or high pile-ups of concrete and to avoid impacts caused by dumping or dropping of concrete on steel decks.
2. Do not use buggies on unprotected areas of deck. If buggies are used to place concrete, furnish and install planked runways to protect deck from damage.

G. Placing Concrete at Construction Joints:

1. To secure full bond at construction joints, horizontal surfaces to receive concrete in a subsequent placement shall be left in a roughened state or intentionally roughened by raking while plastic.
2. Before new concrete is placed in contact, horizontal surfaces of hardened concrete already placed shall be thoroughly cleaned of foreign materials and laitance.
3. Dampen hardened concrete at joints with water where no bonding agents are used. Leave no standing water.
4. Apply specified bonding agent per manufacturer's specifications. Place new concrete while the bonding agent is still tacky.

H. Cold-Weather Placement:

1. Protect concrete work from physical damage or reduced strength which could be caused by frost, freezing actions, or low temperatures, in compliance with ACI 306R and as specified in this section.
2. When air temperature has fallen to or is expected to fall below 40°F, uniformly heat water and aggregates before mixing to obtain a concrete mixture temperature of not less than 50°F, and not more than 80°F, at point of placement.
3. Do not use frozen materials or materials containing ice or snow.

   a. Do not place concrete on frozen subgrade or on subgrade containing frozen materials.

4. Remove frost, snow and ice from forms, reinforcement and other embedments immediately prior to concrete placement.
5. Concrete shall be maintained at temperature no lower than 50 degrees Fahrenheit for minimum 7-day period after placement by means of blanket insulation, heaters, or other methods as approved by the Architect. The Contractor shall keep a record of concrete surface temperature for first 7-days after each pour. This record shall be open to inspection by the Architect.
6. Use only the specified non-corrosive accelerating admixture previously approved as part of the cold weather mixture. Addition of calcium chloride, salt, thiocyanates or admixtures containing more than 0.05 percent chloride ions is not permitted.

I. Hot-Weather Placement:

1. Hot weather is defined as air temperature at the time of delivery, protection and curing which exceeds 90°F or any combination of high temperature, low humidity and/or high wind velocity which causes a rate of evaporation in excess of 0.2 pounds per square feet per hour as determined by ACI 305R.

2. When hot weather conditions exist, place concrete in compliance with ACI 305R and as specified in this section.
3. Cool ingredients before mixing to maintain concrete temperature at time of placement below **[90°F (32°C)].**
4. Mixing water may be chilled, or chopped ice may be used to control temperature, provided water equivalent of ice is calculated to total amount of mixing water.
5. Use of liquid nitrogen to cool concrete is Contractor's option.
6. When concrete placement will occur late in the day and reinforcing steel will be heated by the sun, cover reinforcing steel with water-soaked burlap so that steel temperature will not exceed ambient air temperature immediately before embedding in concrete.
7. When concrete operations must be performed in direct sun, wind, high temperatures, low relative humidity, or other adverse placing conditions, the specified evaporation retarder shall be applied one or more times during the finishing operation to prevent plastic cracking.

~~32.5~~3.5 CONCRETE FINISHES

A. General:

1. Comply with recommendations for concrete finishing established by ACI 302.1R and ACI 304R.
2. Comply with dimensional tolerance limitations given by ACI 117 except as modified in the Construction Documents.
3. Insure removal of bituminous materials, form release agents, bond breakers, curing compounds if permitted and other materials employed in work of concreting which would otherwise prevent proper application of sealants, liquid waterproofing, and other delayed finishes and treatments.
4. Where cleaning is required, take care not to damage surrounding surfaces or leave residue from cleaning agents.
5. Where fiber reinforcement is used, remove exposed fibers from concrete surface to the satisfaction of the Architect.
6. For shored floor or slab on grade construction: Floor flatness/floor levelness tolerance compliance testing is to be performed prior to the removal of shores and forms but not later than 72 hours of concrete placement by Owner's Testing Agency.
7. See architectural drawings for locations of the various finishes listed below.
8. Comply with slab F_F and F_L values specified below:

    a. If an individual test section measures less than either of the specified minimum local F_F/ F_L numbers, that section may be rejected and remedial measures may be required as specified in CONCRETE SURFACE REPAIRS.
    b. If the composite value of the test surface measures less than either of the specified overall F_F/ F_L numbers, then the entire slab may be rejected and remedial measures may be required.
    c. F_L numbers shall not apply to unshored slabs or shored slabs with camber.

B. Finish for monolithic slab surfaces to receive concrete floor topping or mortar setting beds for tile and other bonded applied cementitious finish flooring material, as indicated on architectural drawings:

1. Scratch Finish. Apply scratch finish to monolithic slab surfaces that are to receive concrete floor topping or mortar setting beds for tile, portland cement terrazzo, and other bonded applied cementitious finish flooring material, and as otherwise indicated.

    a. Finish surface to overall value of F_F=20 and F_L=15 and minimum local value of F_F = 14 and F_L=10 measured according to ASTM E 1155.

b. Slope surfaces uniformly to drains where required.
c. After leveling, roughen surface before final set with stiff brushes, brooms, or rakes.

C. Finish for monolithic slab surfaces to be covered with membrane or elastic waterproofing, membrane or elastic roofing, sand-bed terrazzo as indicated on architectural drawings:

1. Float Finish.

a. After screeding, consolidating, and leveling concrete slabs, do not work surface until ready for floating.
b. Begin floating, using float blades or float shoes only, when surface water has disappeared, or when concrete has stiffened sufficiently to permit operation of power-driven floats, or both.
c. Consolidate surface with power-driven floats or by hand-floating if area is small or inaccessible to power units.
d. Finish surfaces to overall value of F_F=20 and F_L=15 and minimum local value of F_F=14 and F_L=10 measured according to ASTM E 1155.
e. Cut down high spots and fill low spots.
f. Uniformly slope surfaces to drains.
g. Immediately after leveling, refloat surface to a uniform, smooth, granular texture.

D. Finishes for Pedestrian Sidewalks and Ramps, Exterior Platforms, Steps, as indicated on architectural drawings:

1. Sidewalks and Curbs: Light-to-medium broom finish applied with fiber-bristle broom perpendicular to direction of main traffic route immediately after float finishing.
2. Ramps: Scored finish as applied perpendicular to direction of main traffic route immediately after float finishing.
3. Finish surface to overall value of F_F=20 and F_L=15 and minimum local value of F_F = 14 and F_L=10 measured according to ASTM E 1155.
4. Texture shall be approved by the Design Professionals from sample panels.

E. Finish for interior floor slab and stair surfaces exposed to view and slab surfaces to be covered with resilient flooring, carpet, ceramic or quarry tile on thick-set mortar, paint or another thin film-finish coating system, as indicated on architectural drawings:

1. Trowel Finish.

a. After floating, begin first trowel-finish operation using a power-driven trowel.
b. Begin final troweling when surface produces a ringing sound as trowel is moved over surface.
c. The final hand-troweling operation shall result in a smooth surface, free of trowel marks, uniform in texture and appearance.
d. Grind smooth any surface defects that would telegraph through applied floor covering system.

2. Finish surface to overall value of F_F=25 and F_L=20 and minimum local value of F_F=17 and F_L=14 measured according to ASTM E 1155.
3. Floor Slopes: Where drains occur, slope floor slabs uniformly to drains, maintaining scheduled slab thickness.
4. Floor Edges at Expansion Joints: Tool edges minimum 3/8".
5. Defects: Remove defects of sufficient magnitude to show through floor covering by grinding.
6. Floor Hardener: Use only where scheduled and in accordance with manufacturer's published instructions.
7. Dry Cement: Shall not be used during finishing.

F. Finish for thin set ceramic tile or thin set epoxy terrazzo, as indicated on architectural drawings:

1. Trowel and Fine Broom Finish:

   a. Apply a trowel finish as specified.
   b. Immediately follow by slightly scarifying the surface with a fine broom.

2. Finish surface to overall value of F_F=30 and F_L=20 and minimum local value of F_F = 20 and F_L=14 measured according to ASTM E 1155.

G. Finishes for Parking Garage Deck, Ramps, Loading Docks, Stairs:

1. Highway straight edge immediately after screeding concrete.
2. Finish surface to overall values of F_F=20 and F_L=15 and minimum local value of F_F = 14 and F_L=10 measured according to ASTM E 1155.
3. For Slabs Not Receiving Deck Coating: Medium broom finish with ridges not to exceed 1/8" in height. Texture shall be as approved by the Design Professionals from sample panels.
4. For Slabs Scheduled to Receive Deck Coating: Smooth floated finish which must be verified with coating manufacturer before finishing the slab.

   a. Coordinate with deck coating specified in Division 7.

5. Auto Ramps: Rough texture applied perpendicular to direction of traffic. Texture shall be as approved by the Design Professionals from sample panels.
6. Finish stairs to profiles shown with cove at base of risers and radius at top: tool grooves at edge of treads as detailed.

H. Tolerances at Slab Discontinuities:
Within 2 ft of slab boundaries, construction joints, isolation joints, block-outs, penetrations or other similar discontinuities, where required for travel paths, installation of finishes and partitions, or any other requirements indicated in the contract documents, the following equivalent straightedge tolerances shall apply:
Specified local F_F = 14, use ¼” over 4 ft, no offset greater than 1/16”
Specified local F_F = 20, use 1/8” over 4 ft, no offset greater than 1/32”

I. Dry Shake Finish:

1. Non-slip aggregate where indicated on drawings.
2. Non-oxidizing metallic hardener on loading docks at a rate of 1.5 lbs. per sq. ft. and in other locations so noted on the drawings.
3. Mineral aggregate hardener at a rate of 1.2 lbs. per sq. ft. where noted on the drawings.
4. Final finish type, method and tolerance as applicable by location and use.
5. Dry shake finish will be applied only where scheduled and in accordance with the manufacturer’s published instructions and the methods and procedures agreed upon at the pre-installation conference.

J. Rough Formed Finish:

1. Acceptable for formed concrete surfaces not exposed-to-view in the finish work or by other construction, unless otherwise indicated.
2. Concrete surface shall have texture imparted by form-facing material used, with tie holes and defective areas repaired and patched, and fins and other projections exceeding 1/4” in height rubber down or chipped off.

K. Smooth Formed Finish:

1. Required for formed concrete surfaces exposed to view, or scheduled to be covered with a coating material applied directly to concrete, or a covering material applied directly to concrete, such as waterproofing, dampproofing, veneer plaster, painting, or other similar system, as indicated on architectural drawings:
2. Surface is an as-cast concrete surface obtained with selected form-facing material, arranged in an orderly and symmetrical manner with a minimum of seams.
3. Repair and patch tie holes and defects. Remove fins and other projections completely.

L. Smooth Rubbed Finish:

1. "Smooth Rubbed" finish shall consist of a finish free of fins, joint marks smoothed off, blemishes removed and surfaces left smooth and unmarred.
2. Provide smooth rubbed finish to scheduled concrete surfaces, as indicated on architectural drawings, which have received smooth form finish treatment not later than one day after form removal.
3. Moisten concrete surfaces and rub with carborundum brick or other abrasive until a uniform color and texture is produced.

   a. Do not apply cement grout other than that created by the rubbing process.

M. Grout-Cleaned Finish:

1. Provide grout-cleaned finish on scheduled concrete surfaces, as indicated on architectural drawings, that have received smooth-formed finish treatment.
2. Combine one part portland cement to one and one-half parts fine sand by volume, and a 50:50 mixture of acrylic or styrene butadiene-based bonding admixture and water to form the consistency of thick paint.
3. Blend standard portland cement and white portland cement in amounts determined by trial patches so that final color of dry grout will match adjacent surfaces.
4. Thoroughly wet concrete surfaces, apply grout to coat surfaces, and fill small holes.
5. Remove excess grout by scraping and rubbing with clean burlap.
6. Keep surface damp by fog spray for at least 36 hours after rubbing.

N. Unformed Surfaces:

1. At tops of walls, horizontal offsets, and similar unformed surfaces adjacent to formed surfaces, strike-off smooth and finish with a texture matching adjacent formed surfaces.
2. Continue final surface treatment of formed surfaces uniformly across adjacent unformed surfaces, unless otherwise indicated.

~~32.6~~3.6 CURING AND PROTECTION

A. Normal Conditions:

1. Protect concrete from premature drying, excessive hot or cold temperature, and damage.
2. After concrete has taken its initial set, care shall be exercised to avoid jarring forms or placing any strain on ends of projecting reinforcement.
3. Concrete shall be kept continuously moist and above 50° for seven days. High early strength concrete usage shall be maintained over 50° for three days. The architect may recommend longer periods based on temperature, wind and humidity conditions.
4. Concrete and concrete patching materials shall be cured according to manufacturers published recommendations.
5. Begin curing as soon as free water has disappeared from concrete surface and finishing has been completed.
6. Comply with CBC Section 1905A.11.

7. Do not permit curing method to affect adversely finishes or treatments applied to finish concrete.
8. Curing Methods: Cure concrete by curing compound, by moist curing, by moisture-retaining cover curing, or by combining these methods, as specified.

    a. Apply curing compound on exposed interior slabs and on exterior slabs, walks, and curbs as follows:

        1) Apply curing compound to concrete slabs as soon as final finishing operations are complete (within 2 hours and after surface water sheen has disappeared). Curing compound should be applied at upper end of manufacturer's range of application.
        2) Apply uniformly in continuous operation by power spray or roller according to manufacturer's directions.
        3) Recoat areas subjected to heavy rainfall within 3 hours after initial application.
        4) Maintain continuity of coating and repair damage during curing period.
        5) Use curing and sealing compounds that will not affect surfaces to be covered with finish materials applied directly to concrete.
        6) Floors to receive covering shall be cleaned thoroughly using a power scrubber and industrial strength detergent.
        7) Hand-brooming and sweeping is not sufficient.
        8) Strippable curing compound may be used in lieu of a moist curing method when approved by the Design Professionals.

    b. Provide moist curing by the following methods:

        1) Keep concrete surface continuously wet by covering with water.
        2) Use continuous water-fog spray.
        3) Cover concrete surface with specified absorptive cover, thoroughly saturate cover with water, and keep continuously wet. Place absorptive cover to provide coverage of concrete surfaces and edges, with a 4" lap over adjacent absorptive covers.

    c. Provide moisture-retaining cover curing as follows:

        1) Cover concrete surfaces with moisture-retaining cover for curing concrete, placed in widest practicable width with sides and ends lapped at least 3" and sealed by waterproof tape or adhesive.

            a) Immediately repair any holes or tears during curing period using cover material and waterproof tape

9. Cure slabs on grade, concrete toppings, concrete pour strips, supported slabs, walls and columns, not subject to conditions of hot or cold weather concreting, in accordance with ACI 308.
10. Cure surfaces exposed to deicing salts, brackish water, etc, such as loading dock slabs, parking garage slabs and ramps in accordance with ACI 308 recommendations for moist curing.
11. Curing Formed Surfaces: Cure formed concrete surfaces, including underside of beams, supported slabs, and other similar surfaces, by moist curing with forms in place for the full curing period or until forms are removed.

    a. If forms are removed, continue curing by methods specified above, as applicable.

B. Cold-Weather Protection:

1. When concrete is placed under conditions of cold weather concreting (defined as a period when the mean daily temperature drops below 40°F for more than 3 successive days), take additional precautions as specified in ACI 306R when placing, curing, monitoring and protecting the fresh concrete.

C. Hot-Weather Protection:

1. When concrete is placed under conditions of hot weather concreting, provide extra protection of the concrete against excessive placement temperatures and excessive drying throughout the placing and curing operations with an evaporation retarder.

a. Apply according to manufacturer's instructions after screeding and bull floating, but before power floating and troweling.

2. Hot weather curing is required if hot weather conditions occur within a 24-hour period after completion of concrete placement.

D. Floor surfaces, wherever indicated by weather conditions, shall be sprinkled during the interval between finishing operation and the start of curing to positively ensure against the possibility of surface drying.

~~32.7~~3.7 MOCKUPS

1. Provide a mockup approximately 3-foot long by full height, as indicated on the Drawings, of a wall using the form liner specified in Section 03 10 00. Repeat mockup until the Design Consultant approves it. Keep and protect the approved mockup until the work represented by the mockup is completed and approved. Remove mockup when so instructed.

~~32.8~~3.8 CONCRETE REPAIRS

A. Where concrete is under strength, out of line, level or plumb, or shows objectionable cracks, honeycombing, rock pockets, voids, spalling, exposed reinforcement, signs of freezing or is otherwise defective, and, in the Architect's judgment, these defects impair proper strength or appearance of the work, the Architect will require its removal and replacement at the Contractor's expense.
B. Perform patching and repairs in accordance with ACI 301.
C. Contractor shall submit patching and repair methods and materials for review by Design Professionals.
D. When complete, all patches and repairs shall match color and texture of adjoining surfaces.
E. At surfaces that are exposed to view, prepare test areas at inconspicuous locations for review by design professionals to verify repair color and texture match before proceeding with repair.
F. Apply all patching and repair materials in accordance with manufacturer's specifications.
G. Repairing Formed Surfaces:

1. Immediately after stripping forms, patch all honeycombing, defective joints, voids, etc. before the concrete is thoroughly dry. Compact patching mortar into place an neatly file defective surfaces to produce level, true planes.
2. Remove all burrs, fins, ledges, bulges and ridges before the concrete is thoroughly dry.
3. Remove stains from rust, grease and oils, form release agents, etc.
4. Remove and replace concrete having defective surfaces if defects cannot be repaired to satisfaction of the Design Professionals.

a. Surface defects, include color and texture irregularities, cracks, spalls, air bubbles, honeycomb, rock pockets, fins and other projections on the surface, and stains and other discolorations that cannot be removed by cleaning.

b. Chip away defective areas, honeycomb, rock pockets, voids over 1/4" in any dimension and holes left by tie rods and bolts, down to solid concrete but in no case to a depth less than 1" and saw-cut edges to prevent feather edging of fill material. Thoroughly wet surface before placing patching mortar.

5. Repair concealed formed surfaces, where possible, containing defects that affect the durability of concrete. If defects cannot be repaired, remove and replace concrete.
6. Clean out form tie holes and fill with dry pack mortar or precast cone plugs secured in place with bonding agent.
7. If honeycombing exposes reinforcement, chip to provide clear space at least 3/4" wide all around steel to allow proper bond.

H. Repairing Unformed Surfaces:

1. Depressed and high areas in concrete surfaces which are in excess of specified tolerances shall be leveled or ground-smooth.

   a. Correct high areas by grinding after concrete has cured at least 14 days. Surface defects include crazing and cracks in excess of 0.01" wide or that penetrate to the reinforcement or completely through nonreinforced sections regardless of width, spalling, popouts, honeycombs, rock pockets, and other objectionable conditions.
   b. Correct low areas by applying leveling material. Finish leveling material as specified in this section.

2. Repair surfaces containing defects that affect durability of concrete.

   a. Surface defects include crazing and cracks in excess of 0.01" wide or that penetrate to the reinforcement or completely through nonreinforced sections regardless of width, spalling, popouts, honeycombs, rock pockets, and other objectionable conditions.

3. Repair defective areas, except random cracks and single holes not exceeding 1" in diameter, by cutting out and replacing with fresh concrete.

   a. Remove defective areas with clean, square cuts and expose reinforcing steel with at least 3/4" clearance all around.

4. Contractor shall be responsible for repairing all cracks wider than 0.02” and all cracks wider than 0.01”, that occur in a group of at least three cracks within twelve inches, in concrete slabs by epoxy injection or routing and sealing as required by Design Professionals. Use epoxy adhesive, Eucopoxy Injection Resin by The Euclid Chemical Company or Sikadur 35, LV, LPL by the Sika Corporation according to manufacturer’s recommendations.

I. Filling In: Fill in holes and openings left in concrete for passage of work by other trades, unless otherwise shown or directed, after work of other trades is in place.

~~32.9~~3.9 EVALUATION AND ACCEPTANCE OF CONCRETE

A. In accordance with ACI 301, except where otherwise specified.
B. If, at any time during construction, the concrete resulting from the approved mix design deviates from Specification requirements for any reason, such as lack of workability, or insufficient strength, the contractor shall have his laboratory verify the deficiency and modify the mix design, until the specified concrete is obtained. Modified mix to be submitted for approval per Part 1 - SUBMITTALS.

~~32.10~~3.10 COORDINATION & CORRECTIVE MEASURES

A. Conflicts: The contractor shall be solely responsible for errors of detailing, fabrication, and placement of reinforcement steel; placement of inserts and other embedded items; and the structural adequacy of all formwork.

B. Reimbursement for Additional Services: Should additional work and/or visits be required which are necessitated by failure of the Contractor to perform his work in accordance with the contract documents, or if additional design or drafting time is required for corrective measures caused by failure to perform in accordance with the contract documents, the Contractor shall reimburse the Architect and Engineer at the rate of direct personnel expense plus 150% overhead plus out-of-pocket traveling expenses incurred.

~~32.11~~3.11 CLEAN UP

A. Perform Work under this Section to keep affected portions of building site neat, clean, and orderly. Remove, immediately upon completion of Work under this Section, surplus materials, rubbish, and equipment associated with or used in performance. Be aware that failure to perform clean-up operations within 24 hours of notice by Architect will be considered adequate grounds for having work done by others at no added expense to the Owner.

END OF SECTION

CONCRETE MIX DESIGN SUBMITTAL FORM

Project: _____

City: _____

General Contractor: _____

Concrete Contractor: _____

Concrete Strength: _____

Use/Location on Job: _____

Supplier's Mix Designation: _____

Design Mix Information	**(Please check one):**	*Refer to ACI 301 for requirements of data used to substantiate strength calculations.*
Field Experience (Based on Standard Deviation Analysis):	_____	
Trial Mixture Test Data:	_____	

Design Characteristics:		
Density:	_____	Pcf
Strength:	_____	Psi (28 day)
Air:	_____	% (specified)

Materials:	Type/Source	Specific Gravity	Weight (lb)	Absolute Vol. (cu. ft.)
Cement:				
Fly ash:				
Slag (GGBFS)				
Microsilica:				
Coarse Aggregate:				
Fine Aggregate:				
Water:				
Air:				
Other:				
TOTAL:				27.0 cu. ft.
Water/Cementitious Material Ratio (lbs. water / lbs. cementitious material) =				%

Admixtures:	Manufacturer	ASTM	Dosage (oz/cwt)
Water Reducer:			
Air Entraining Agent:			
High Range Water Reducer			
Non-corrosive Accelerator:			
Other:			

Slump before HRWR: _____ Inches

Slump after HRWR: _____ Inches

Standard Deviation Analysis (from experience records):

No. of Test Cylinders Evaluated: _____

Standard Deviation:

Required Average Strength f'cr

Average Strength by Tests

Equation Used (ACI Chapter 5)

(Refer to ACI 318 for increased deviation factor when less than 30 tests are available)

TRIAL MIXTURE TEST DATA

Compressive Strength:	Age (days)	Mix #1	Mix #2	Mix #3
	28 [56] [90]	psi	psi	Psi
	28 [56] [90]	psi	psi	Psi
	28 [56] [90]	psi	psi	Psi
	Average	psi	psi	psi
Required Average Strength f'cr				
Average Strength by Tests				
Equation Used (ACI Chapter 5)				

REQUIRED ATTACHMENTS	***PLEASE CHECK***
Coarse Aggregate Gradation Report	
Fine Aggregrate Gradation Report	
Combined Aggregate Gradation Report: (8% - 18% for large top size aggregates (1½ in.) or 8% - 22% for smaller top size aggregates (1 in. or ¾ in.) retained on each sieve below the top size and above the No. 100) (See Section 2.3.B.)	
Fly Ash (or other Supplementary Cementitious Material) Certification	
Concrete Compressive Strength Data or Trial Mixture Test Data	
Admixture Compatibility certification letters	
Chloride Ion Content Certification	
Alkali Aggregate Reactivity Certification	
Shrinkage Test Reports	

SUBMITTED BY:

Name: _____

Address: _____

_____

Phone no.: _____

Main Plant Location: _____

Miles from Project: _____

Secondary Plant Location: _____

Miles from Project: _____

_____

Date: _____

Certification by Concrete Supplier:
Signature: _____

Structural Substitution Request Form – to be completed by Contractor

Project:		Substitution Request #
Date:		
Requesting Contractor:		Pages Attached (including this form)

1. Description of Requested Substitution:

2. Related Drawings and Specification Sections:

3. Rationale or Benefit Anticipated:

4. Effect on Construction Schedule[1] (check one): ☐ NONE ☐ See Attached

5. Effect on Owner's Cost[2] attach data (check one): ☐ CREDIT TO OWNER ☐ EXTRA

6. Effect on Construction Documents[3] (design work anticipated): ☐ NONE ☐ See Attached

7. Requesting Contractor Agrees to Pay for Design Changes (check): ☐ YES ☐ NO ☐ NOT APPLICABLE

8. Effect on Other Trades[4]:

9. Effect of Substitution on Manufacturer's Warranty (check): ☐ NONE ☐ See Attachment

Signature[5]: Date:

Company:

General Contractor Signature[5]: Date:

Notes:

1. Contractor is responsible for means and methods and any problems that may arise from making the requested substitution.
2. This is **NOT A CHANGE ORDER FORM**. A separate form is required to adjust costs and/or schedules.
3. Contractor is responsible for any design impacts that may arise from this substitution, including redesign efforts.
4. Contractor is responsible for effects on other trades from this substitution; General Contractor must review and agree effects on other trades are fairly represented in items 4-9.
5. Signature by a person having authority to legally bind his/her company to the above terms. Otherwise this request is void
6. All items in form must be completed for substitution request to be considered.

Request Review Responses (completed by Architect and/or Engineer(s)):

ACCEPTED	ACCEPTED AS NOTED	REJECTED	INSUFFICIENT DATA TO SUPPORT REQUEST	ENGINEER / ARCH / MEP SIGNATURE	DATE

Engineer/Architects Comments:

SECTION 03 33 00 - LANDSCAPE ARCHITECTURAL CONCRETE

PART 1 - GENERAL

1.1 RELATED DOCUMENTS

A. Drawings and general provisions of the Contract, including General and Supplementary Conditions and Division 01 Specification Sections, apply to this Section.

1.2 SUMMARY

A. This Section specifies cast-in-place Landscape Architectural concrete including form facings, reinforcement accessories, concrete materials, concrete mixture design, placement procedures, and finishes.

B. Related Sections include the following:

1. Section 01 10 10 - Sustainable Design Requirements.

2. Division 03 Section "Cast-In-Place Concrete" for formwork; material, fabrication, and installation requirements for steel reinforcement; and field quality control.

3. Division 05 Section “Pipe and Tube Railings” for fabrication and installation requirements for pipe and tube railings.

4. Division 31 Section "Site Clearing" for removal limits of trees, shrubs, and other plantings affected by new construction.

5. Division 31 Section "Earth Moving" for building and utility trench excavation, backfilling, compacting and grading requirements, and soil materials.

6. Division 32 Section "Concrete Paving Joint Sealants" for joint sealants in contraction and other joints in cast-in-place Landscape Architectural concrete.

7. Division 32 Section "Decorative Concrete Paving" for Landscape Architectural concrete pavement and flatwork finishes.

8. Division 32 Section “Plants” and “Turf and Grasses” for coordination with adjacent planting areas.

9. Division 32 Section “Planting Irrigation” for coordination with adjacent irrigation systems.

10. Section 01 81 13, “SUSTAINABLE DESIGN REQUIREMENTS”: LEED Requirements.

1.3 REFERENCES

A. US Green Building Council (USGBC), www.usgbc.org

1.4 DEFINITIONS

A. Cast-in-Place Landscape Architectural Concrete: Exterior formed concrete shown on the Landscape Plans except for walkways requiring special concrete materials, formwork, placement, or finishes to obtain specified Landscape Architectural appearance.

B. Cementitious Materials: Portland cement alone or in combination with one or more of the following: blended hydraulic cement, fly ash and other pozzolans, ground granulated blast-furnace slag, and silica fume; subject to compliance with requirements.

C. Design Reference Sample: Sample designated by Design Consultant in the Contract Documents that reflects acceptable surface quality and appearance of cast-in-place Landscape Architectural concrete.

D. Reveal: Projection of coarse aggregate from matrix or mortar after completion of exposure operations.

1.5 SUBMITTALS

A. Comply with Section 01 10 10 - Sustainable Design Requirements.

B. Product Data: Furnish manufacturer's product specifications and installation instructions for the following and for each type of product indicated.

1. Clear sealer

2. Curing agents

3. Dowels

4. Expansion joint filler material

5. Fiber reinforcement

6. Finish retardant

7. Form materials

8. Form release agent

9. Integral color/ color admixture

10. Joint sealant

C. Product Samples: Submit one pound samples, clearly identified, for each component used to prepare each paving type, including but not limited to:

1. Coarse Aggregate

D. Design Mixtures: Furnish certified reports of proposed mix design for each type of concrete installation. For each concrete mixture. Submit alternate design mixtures when characteristics of materials, Project conditions, weather, test results, or other circumstances warrant adjustments.

1. Provide documentation for each paving type specified on Drawings that will enable ~~Owner's~~ the City's Authorized Representative's to better match replaced concrete:

2. Laboratory and Cement Test Reports: Submit six copies of laboratory test reports for concrete materials and a certificate with each concrete mixer truck, stating mix design, PSI, rating, slump, water and cement quantity, cement/water ration, fine and coarse aggregate and color additives.

   a. Cement:
      1) Manufacturer and plant location.
      2) Cement type, i.e. Type I, II, III, or V.

   b. Admixtures:
      1) Manufacturer and plant location.

   c. Sand:
      1) Source and Type.

   d. Aggregates:
      1) Source and Type.

3. Signed certification from a licensed structural engineer.

E. Formwork Shop Drawings: Show formwork construction including form-facing joints, rustications, construction and contraction joints, form joint-sealant details, form tie locations and patterns, inserts and embedments, cutouts, cleanout panels, and other items that visually affect cast-in-place Landscape Architectural concrete.

F. Placement Schedule: Submit concrete placement schedule before start of placement operations. Include locations of each joints including construction joints.

G. Samples for Verification: Landscape Architectural concrete Samples, cast vertically, approximately 18 by 36 by 2 inches, of finishes, colors, and textures to match design reference sample (if provided). Include Sample sets showing the full range of variations expected in these characteristics.

H. Qualification Data: For installer.

1. Installer: Provide evidence to indicate successful experience in providing decorative concrete work similar to that specified herein and can demonstrate successful experience through past Project documentation and references.

2. Experience: Minimum 5 years experience in the installation of patterned concrete paving.

3. Demonstration of Experience: 10 Projects which have been completed within the past 36 months utilizing similar products, scope and complexity.

4. Supervision: Perform placement and finishing of concrete work under supervision of a person having a minimum of 5 years of experience in placement and finishing of products specified herein.

5. Submit qualifications to ~~Owner's~~ the City's Authorized Representative for information purposes. Submit a resume of Project Manager and Superintendent who will be overseeing the Work.

I. Certification that Design Consultant's Reference panels have been reviewed (if reference panels provided) and that materials and processes provided will achieve intended effects indicated on Design Consultant's Reference panel.

J. Submittals for above items shall be made in one package. If submittals are judged incomplete or non-responsive to the directions of the Design Consultant after three submissions the Contractor shall be back charged for the Design Consultant's costs to process additional Submittals.

K. Field quality-control test reports.

L. Minutes of preinstallation conference.

M. Delivery slips.

N. LEED certification product data as specified in Division 1, Section 01 81 13, "SUSTAINABLE DESIGN REQUIREMENTS", for the following LEED credits:

1. Credit MR 4.1 & 4.2, Recycled Content

2. Credit MR 5.1 & 5.2, Regional Materials, Manufactured & Harvested / Extracted Locally

1.6 QUALITY ASSURANCE

A. Manufacturer Qualifications: A firm experienced in manufacturing ready-mixed concrete products and that complies with ASTM C 94/C 94M requirements for production facilities and equipment.

1. Manufacturer certified according to NRMCA's "Certification of Ready Mixed Concrete Production Facilities."

B. Testing Agency Qualifications: An independent agency qualified according to ASTM C 1077 and ASTM E 329 for testing indicated, as documented according to ASTM E 548.

C. Source Limitations for Cast-in-Place Landscape Architectural Concrete: Obtain each color, size, type, and variety of concrete material and concrete mixture from one manufacturer with resources to provide cast-in-place Landscape Architectural concrete of consistent quality in appearance and physical properties.

D. The total estimated requirement of architectural aggregate plus anticipated losses and waste shall be procured from one source of supply. The Contractor will assure that the source of supply is adequate to provide, throughout the duration of the project, an aggregate which is uniform in size, color and shape. Should an aggregate be elected in which there is doubt about the quantity of a uniform supply, the Contractor shall require the supplier to remove the entire amount from the pit, mine or river and thoroughly mix and stockpile said aggregate for exclusive use of this project.

E. Concrete Testing Service: Engage a qualified independent testing agency to perform material evaluation tests and to design concrete mixtures.

F. Mockups: Before casting Landscape Architectural concrete, build mockups to verify selections made under sample submittals and to demonstrate typical joints, surface finish, texture, tolerances, and standard of workmanship. Build mockups to comply with the following requirements, using materials indicated for the completed Work:

1. Build mockups at the job site, 18” wide x 18” high x 36” min length for each wall type and 36” min length (48” min. length if curved) sample for curbs and headers at the location as directed by Design Consultant.

2. Build mockups of each cast-in-place Landscape Architectural concrete type ~~as indicated on Drawings.~~.

3. Build mockups using identical materials, design mix and methods to be used in the work.

4. Mix Design: The concrete mix design used to prepare the sample panels shall be identical to that used for the project's landscape architectural concrete

5. Demonstrate curing, cleaning, and protecting of cast-in-place Landscape Architectural concrete, finishes, and contraction joints, as applicable.

6. Mockups shall be cured a minimum of 10 days prior to review by the Design Consultant.

7. In presence of Design Consultant, damage part of the exposed-face surface for each finish, color, and texture, and demonstrate materials and techniques proposed for repair of tie holes and surface blemishes to match adjacent undamaged surfaces.

8. Obtain Design Consultant's approval of mockups before casting Landscape Architectural concrete.

9. The contractor shall be back charged for the costs of the Design Consultant to review more than two mock up attempts.

10. Remove mock ups from the job site when directed and dispose legally.

G. Preinstallation Conference: Conduct conference at Project site to comply with requirements in Division 01 Section "Project Management And Coordination."

1. Before submitting design mixtures, review concrete design mixture and examine procedures for ensuring quality of concrete materials. Require representatives of each entity directly concerned with cast-in-place Landscape Architectural concrete to attend, including the following:
   a. Contractor's superintendent.
   b. Independent testing agency responsible for concrete design mixtures.
   c. Ready-mix concrete manufacturer.
   d. Cast-in-place Landscape Architectural concrete subcontractor.

2. Review concrete finishes and finishing, cold- and hot-weather concreting procedures, curing procedures, construction joints, forms and form-removal

limitations, reinforcement accessory installation, concrete repair procedures, and protection of cast-in-place Landscape Architectural concrete.

1.7 PROJECT CONDITIONS

A. Traffic Control: Maintain access for vehicular and pedestrian traffic as required for other construction activities.

1.8 DELIVERY AND HANDLING

~~A. Conform to Section 01600 Product Requirements.~~

~~B.~~A. Deliver, store, and handle reinforcement to prevent damage.

1.9 REGULATORY REQUIREMENTS

A. Testing: Slump tests shall be taken to certify compliance with mix design. Slump shall be in accordance

B. Mix design shall be in accordance with ACI 211-6.with ASTM C 143.

C. Conform to applicable laws, codes, and regulations required by authorities having jurisdiction over the work.

1.10 SITE CONDITIONS

A. Do not place concrete when subbase surface temperature is less than 40 degrees F, nor when surface is wet.

1.11 COORDINATION

A. In accordance with Section 03 20 03.

B. Ensure that irrigation sleeves, electrical conduit, food cart outlets, and other utility elements are accommodated and as-built located prior to pouring concrete.

1.12 INSPECTION OF SITE

A. Verify conditions at site affect Work of this Section, and take field measurements as required. Report major discrepancies between Drawings and field dimensions to ~~Owner's~~ The City's Authorized Representative prior to commencing work.

PART 2 - PRODUCTS

2.1 FORMING MATERIALS

A. General: Comply with Division 03 Section "Cast-In-Place Concrete" for formwork and other form-facing material requirements.

B. Forms shall be new; no reused or reconditioned forms will be permitted. Forms for landscape architectural concrete shall be built so that they are completely rigid, strong enough to withstand without deflection, movement or leakage, the high hydraulic pressures which result from rapid filling and heavy frequency vibration. Materials shall be new at start of work.

C. Fasteners shall be formed galvanized steel or other approved non-corrosive steel materials.

D. Form-Facing Materials for Smooth-Formed Finished Concrete: Form-facing panels that will provide continuous, true, and smooth concrete surfaces. Furnish in largest practicable sizes to minimize number of joints.

1. Exterior-grade plywood panels, suitable for concrete forms, complying with DOC PS 1, and as follows:
   a. High-density overlaid plyform, Class I or II. Use for surfaces to have a Plyformed finish.

E. Forms for Cylindrical Columns, Pedestals, and Supports: Metal, glass-fiber-reinforced plastic, paper, or fiber tubes that will provide surfaces with gradual or abrupt irregularities not exceeding specified formwork surface class. Provide units with sufficient wall thickness to resist plastic concrete loads without detrimental deformation.

F. Rustication Strips: Metal, rigid plastic, or dressed wood with sides beveled and back kerfed; nonstaining; in longest practicable lengths.

G. Form Joint Tape: Compressible foam tape; pressure sensitive; AAMA 800, "Specification 810.1, Expanded Cellular Glazing Tape"; minimum 1/4 inch ~~(6 mm)~~ thick.

H. Form Joint Sealant: Elastomeric sealant complying with ASTM C 920, Type M or S, Grade NS, that adheres to form joint substrates.

I. Form Sealer: Penetrating, clear, polyurethane wood form sealer formulated to reduce absorption of bleed water and prevent migration of set-retarding chemicals from wood.

1. Acceptable Manufacturers:
   a. W.R. Grace Company "Formfilm”
   b. Nox-Crete Chemicals, Inc. "Pre-Form”
   c. Hunt Process Co. "Seal Form-L”

J. Form-Release Agent: Commercially formulated colorless form-release agent that will not bond with, stain, or adversely affect Landscape Architectural concrete surfaces, that is compatible with the sealer and will not impair subsequent treatments of those surfaces.

1. Formulate form-release agent with rust inhibitor for steel form-facing materials.

2. Final acceptance of form release agent depends on proven performance on mock up panels.

3. Acceptable Manufacturers:
   a. Atlas Release (858) 277-2100

K. Surface Retarder: Chemical liquid set retarder, for application on form-facing materials, capable of temporarily delaying final hardening of newly placed concrete surface to depth of reveal specified.

1. Acceptable Manufacturers:
   a. Top Cast/ Top Face by Grace Products
   b. Rugasol

L. Form Ties: Factory-fabricated, As indicated on the Drawings or ¼" snap ties or for types requiring extra support 3/8" dia she bolts compatible with 1" dia cones. Ties shall be designed to resist lateral pressure of fresh concrete on forms and to prevent spalling of concrete on removal.

M. Stripping Gaskets: Resilient rectangular material non-absorbent and non-staining at junctions of formwork and at junctions for forms with columns and beams as required to permit removal and reuse of formwork without damage.

N. Form Gaskets: 1/8" x ½" adhesive backed foam tape.

1. Acceptable Manufacturers:
   a. Burke Company
   b. Norton Sealants
   c. Arlon Co.

O. Chairs and spacers: Solid plastic of color matching landscape architectural concrete

2.2 STEEL REINFORCEMENT AND ACCESSORIES

A. General: Comply with Division 03 Section "Cast-In-Place Concrete" for steel reinforcement and other requirements for reinforcement accessories.

B. Recycled Content of Steel Products: Provide products with an average recycled content of steel products so postconsumer recycled content plus one-half of preconsumer recycled content is not less than 25 percent.

C. Bar Supports: Bolsters, chairs, spacers, and other devices for spacing, supporting, and fastening reinforcing bars and welded-wire fabric in place; manufacture according to CRSI's "Manual of Standard Practice."

1. Where legs of wire bar supports contact forms, use gray, all-plastic, CRSI Class 1, gray, plastic-protected or CRSI Class 2, stainless-steel bar supports.

2.3 ABRASIVE STAIR NOSINGS

A. Repair stair with in contrasting colors, install at ~~all~~ treads and top landing of exterior stairs in compliance with California Building Code requirements to match existing stair nosing.

2.4 CONCRETE MATERIALS

A. Cementitious Material: Use the following cementitious materials, of the same type, brand, and source, throughout Project:

1. Portland Cement: ASTM C 150, Type II gray or white as needed to achieve desired color effect.
   a. Fly Ash: ASTM C 618, Class F.
   b. Ground Granulated Blast-Furnace Slag: ASTM C 989, Grade 100 or 120.
   c. Silica Fume: ASTM C 1240, amorphous silica.

B. Normal-Weight Aggregates: ASTM C 33, coarse aggregate or better, graded. Provide aggregates from a single source with documented service record data of at least 10

years' satisfactory service in similar applications and service conditions using similar aggregates and cementitious materials.

1. Maximum Coarse Aggregate Size: As indicated on the Drawings. Cleanliness value shall not be less than 75 when tested in accordance with California Test 227.

2. Gradation: Uniformly graded.

C. Normal-Weight Fine Aggregate: ASTM C 33 or ASTM C 144, manufactured or natural sand, from same source for entire Project. Free of materials with deleterious reactivity to alkali in cement. Sand Equivalent shall not be less than 75 when tested in accordance with California Test 217.

D. Water: Potable, complying with ASTM C 94/C 94M except free of wash water from mixer washout operations.

2.5 ADMIXTURES

A. Air-Entraining Admixture: ASTM C 260.

B. Chemical Admixtures: Provide admixtures certified by manufacturer to be compatible with other admixtures and that will not contribute water-soluble chloride ions exceeding those permitted in hardened concrete. Do not use calcium chloride or admixtures containing calcium chloride.
1. Water-Reducing Admixture: ASTM C 494/C 494M, Type A.
2. Retarding Admixture: ASTM C 494/C 494M, Type B.
3. Water-Reducing and Retarding Admixture: ASTM C 494/C 494M, Type D.
4. High-Range, Water-Reducing Admixture: ASTM C 494/C 494M, Type F.
5. High-Range, Water-Reducing and Retarding Admixture: ASTM C 494/C 494M, Type G.
6. Plasticizing and Retarding Admixture: ASTM C 1017/C 1017M, Type II.

2.6 COLOR MATERIALS

A. Integral Color: Integrally color concrete in colors, blending mixtures and application rates necessary to create colors, gradations, and variations to match Design Consultant’s mock-up.

1. Color Pigment: ASTM C 979, synthetic mineral-oxide pigments or colored water-reducing admixtures; color stable, free of carbon black, nonfading, and resistant to lime and other alkalis.

2. Acceptable Manufacturers:

a. As indicated on the Drawings or as selected by the Design Consultant.

3. Color:

a. As indicated on the Drawings or as selected by Design Consultant from manufacturer's full range.

2.7 CURING MATERIALS

A. Absorptive Cover: AASHTO M 182, Class 2, burlap cloth made from jute or kenaf, weighing approximately 9 oz./sq. yd. when dry.

B. Moisture-Retaining Cover: ASTM C 171, polyethylene film or white burlap-polyethylene sheet.

C. Waterborne, Membrane-Forming Curing Compound: ASTM C 309, Type 1, Class B.

1. For integrally colored concrete, curing compound shall be pigmented type approved by color pigment manufacturer.

2. For concrete indicated to be sealed, curing compound shall be compatible with sealer.

2.8 REPAIR MATERIALS

A. Bonding Agent: ASTM C 1059, Type II, nonredispersible, acrylic emulsion or styrene butadiene.

B. Epoxy Bonding Adhesive: ASTM C 881, two-component epoxy resin, capable of humid curing and bonding to damp surfaces, of class suitable for application temperature and of grade to suit requirements.

1. Types I and II, non-load bearing]; IV and V, load bearing, for bonding hardened or freshly mixed concrete to hardened concrete.

2.9 CONCRETE MIXTURES, GENERAL

A. Prepare design mixtures for each type and strength of cast-in-place Landscape Architectural concrete proportioned on basis of laboratory trial mixture or field test data, or both, according to ACI 301.

1. Mix design shall be the responsibility of the Contractor.

2. Contractor shall employ a Testing Laboratory approved by the Design Consultant under the active direction of the Design Consultant, who shall determine mix designs to fulfill the specified requirements for strength, aggregate size and workability of concrete, and such designs shall be used in proportioning structural concrete.

3. Mix designs shall be submitted to the Design Consultant for review at least 10 days prior to scheduled concrete pour.

4. Review by the Design Consultant shall not be considered unqualified approval, and shall not relieve the Contractor of his responsibility to furnish concrete of proper consistency and specified strengths.

5. Provide concrete of the strengths indicated in the structural general notes

B. Use a qualified independent testing agency for preparing and reporting proposed concrete mixture designs for the trial batch method.

C. Proportion concrete mixtures as follows:

1. Compressive Strength (28 Days): As indicated on the Drawings or 3000 psi (20.7 MPa).

2. Maximum Water-Cementitious Materials Ratio: 0.46.

3. Slump Limit: 4 inches (100 mm), plus or minus 1 inch (25 mm).

D. Cementitious Materials: For cast-in-place Landscape Architectural concrete exposed to deicers, limit percentage, by weight, of cementitious materials other than portland cement according to ACI 301 requirements. Use fly ash, pozzolan, ground granulated blast-furnace slag, and silica fume as needed to reduce the total amount of portland cement, which would otherwise be used, by not less than 40 percent.

E. Limit water-soluble, chloride-ion content in hardened concrete to [0.06] [0.15] [0.30] [1.00] percent by weight of cement.

F. Admixtures: Use admixtures according to manufacturer's written instructions.

G. Color Pigment: Add color pigment to concrete mixture according to manufacturer's written instructions and to result in hardened concrete color consistent with approved mockup.

2.10 CONCRETE MIXING

A. Ready-Mixed Landscape Architectural Concrete: Measure, batch, mix, and deliver concrete according to ASTM C 94/C 94M and furnish batch ticket information.

1. Clean equipment used to mix and deliver cast-in-place Landscape Architectural concrete to prevent contamination from other concrete.

2. When air temperature is between 85 and 90 deg F (30 and 32 deg C), reduce mixing and delivery time from 1-1/2 hours to 75 minutes; when air temperature is above 90 deg F (32 deg C), reduce mixing and delivery time to 60 minutes.

PART 3 - EXECUTION

3.1 FORMWORK

A. General: Comply with Division 03 Section "Cast-In-Place Concrete" for formwork, embedded items, and shoring and reshoring.

B. The design, engineering and construction of forms shall be the Contractor’s responsibility.

C. Construct forms to shape, lines and dimensions of architectural concrete members. Spacing of studs, ties and other supporting members shall be such to support maximum pressures imposed by the wet concrete (mix). Final concrete surfaces shall conform to tolerances as specified.

D. Limit deflection of form-facing panels to not exceed ACI 303.1 requirements.

E. In addition to ACI 303.1 limits on form-facing panel deflection, limit cast-in-place Landscape Architectural concrete surface irregularities, designated by ACI 347R as abrupt or gradual, as follows:

1. Class A, 1/8 inch ~~(3.2 mm)~~

F. Fabricate forms to result in cast-in-place Landscape Architectural concrete that complies with ACI 117, "Specifications for Tolerances for Concrete Construction and Materials."

G. Tolerances: In addition to ACI 117, comply with the following tolerances:

1. Tolerances shall not be cumulative.

2. Variation from plumb for lines and surface of columns, walls, beams and arises:
   a. In 10' length: 1/8".
   b. Maximum for entire length: 1/2".

3. Variation from the level or from the indicated elevations of tops of slabs, beams, and arises:
   a. Across Top: 1/8".
   b. In 10' length: 3/16".
   c. In bay or in 20' length: 1/4".
   d. Maximum for entire length: 1/2".

4. Deviation from Round:

   a. Out of round, 1/4".

H. Failure to comply with these limits will result in the Contractor, at his expense, filling and/or grinding the sub-standard surfaces, or if this is deemed impossible by the ~~Owner's~~ City's Representative, then the concrete section shall be removed and reconstructed at no expense to the ~~owner~~City.

I. Fabricate forms for easy removal without hammering or prying against concrete surfaces. Provide crush or wrecking plates where stripping may damage cast-in-place surfaces. Provide top forms for inclined surfaces steeper than 1.5 horizontal to 1 vertical. Kerf wood rustications, keyways, reglets, recesses, and the like, for easy removal.

1. Seal form joints and penetrations at form ties with form joint tape or form joint sealant to prevent cement paste leakage.

2. Do not use rust-stained steel form-facing material.

J. Provide temporary openings for cleanouts and inspection ports where interior area of formwork is inaccessible. Close openings with panels tightly fitted to forms and securely braced to prevent loss of concrete mortar. Locate temporary openings in forms at inconspicuous locations.

K. Do not chamfer exterior corners and edges of cast-in-place Landscape Architectural concrete.

L. Coat contact surfaces of wood rustications and chamfer strips with sealer before placing reinforcement, anchoring devices, and embedded items.

M. Form openings, chases, offsets, sinkages, keyways, reglets, blocking, screeds, and bulkheads required in the Work. Determine sizes and locations from trades providing such items.

N. Clean forms and adjacent surfaces to receive concrete. Remove chips, wood, sawdust, dirt, and other debris just before placing concrete.

O. Retighten forms and bracing before placing concrete, as required, to prevent mortar leaks and maintain proper alignment.

P. Forms shall be tight to prevent concrete loss. Corner chamfer strips are not allowed, making mandatory especially tight well designed corners of the forms. Continuous girts and blocking shall be provided behind plywood butt joints not backed.

Q. All forms shall be cleaned of extraneous loose material with compressed air, and thoroughly inspected before use. Forms with clips, dents, damaged corners or edges, scratches, gouges or other defects that will transfer to the concrete surface will be discarded. Forms shall be thoroughly wetted just before concrete placement. Have sufficient equipment available to allow for these procedures.

R. Coat contact surfaces of forms with form-release agent, according to manufacturer's written instructions, before placing reinforcement.

S. Coat contact surfaces of forms with surface retarder, according to manufacturer's written instructions, before placing reinforcement.

T. Place form liners accurately to provide finished surface texture indicated. Provide solid backing and attach securely to prevent deflection and maintain stability of liners during concreting. Prevent form liners from sagging and stretching in hot weather. Seal joints of form liners and form liner accessories to prevent mortar leaks. Coat form liner with form-release agent.

3.2 REINFORCEMENT AND INSERTS

A. General: Comply with Division 03 Section "Cast-In-Place Concrete" for fabricating and installing steel reinforcement. Securely fasten steel reinforcement and wire ties against shifting during concrete placement.

B. Set wire ties with ends directed into concrete, not toward exposed concrete surfaces.

3.3 REMOVING AND REUSING FORMS

A. Formwork for sides of beams, walls, columns, and similar parts of the Work that does not support weight of concrete may be removed after cumulatively curing at not less than 50 deg F (10 deg C) for 24 hours after placing concrete, if concrete is hard enough to not be damaged by form-removal operations and curing and protection operations are maintained.

1. Schedule form removal to maintain surface appearance that matches approved mockups.

B. Clean and repair surfaces of forms to be reused in the Work. Do not use split, frayed, delaminated, or otherwise damaged form-facing material. Apply new form-release agent.

C. When forms are reused, clean surfaces, remove fins and laitance, and tighten to close joints. Align and secure joints to avoid offsets. Do not use patched forms for cast-in-place Landscape Architectural concrete surfaces.

3.4 JOINTS

A. Construction Joints: Install construction joints true to line with faces perpendicular to surface plane of cast-in-place Landscape Architectural concrete so strength and appearance of concrete are not impaired, at locations indicated or as approved by Design Consultant.

1. Place joints perpendicular to main reinforcement. Continue reinforcement across construction joints, unless otherwise indicated.

2. Locate horizontal joints in walls and columns at underside of floors, slabs, beams, and girders and at the top of footings or floor slabs.

3. Space vertical joints in walls as indicated on the Drawings or 16’-0” max. on center as approved by the Design Consultant. Locate joints beside piers integral with walls, near corners, and in concealed locations where possible.

B. Contraction Joints: Form weakened-plane contraction joints true to line with faces perpendicular to surface plane of cast-in-place Landscape Architectural concrete so strength and appearance of concrete are not impaired, at locations indicated on the Drawings or 8’-0” on center as approved by Design Consultant.

1. Sawed Joints: Form contraction joints with power saws equipped with shatterproof abrasive or diamond-rimmed blades. Cut 1/8-inch- wide joints into concrete when cutting action will not tear, abrade, or otherwise damage surface and before concrete develops random contraction cracks.

C. Isolation Joints in Slabs-on-Grade: After removing formwork, install joint-filler strips at slab junctions with vertical surfaces, such as column pedestals, foundation walls, grade beams, and other locations, as indicated.

1. Extend joint-filler strips full width and depth of joint, terminating flush with finished concrete surface, unless otherwise indicated.
2. Terminate full-width joint-filler strips not less than 1/2 inch or more than 1 inch below finished concrete surface where joint sealants, specified in Division 7 Section "Joint Sealants," are indicated.
3. Install joint-filler strips in lengths as long as practicable. Where more than one length is required, lace or clip sections together.

D. Doweled Joints: Install dowel bars and support assemblies at joints where indicated. Lubricate or asphalt coat one-half of dowel length to prevent concrete bonding to one side of joint.

3.5 CONCRETE PLACEMENT

A. Before placing concrete, verify that installation of formwork, form-release agent, reinforcement, and embedded items is complete and that required inspections have been performed.

B. Do not add water to concrete during delivery, at Project site, or during placement unless approved by Design Consultant.

C. Before test sampling and placing concrete, water may be added at Project site, subject to limitations of ACI 301.

1. Do not add water to concrete after adding high-range water-reducing admixtures to mixture.

D. Deposit concrete continuously between construction joints. Deposit concrete to avoid segregation.

1. Deposit concrete in horizontal layers of depth to not exceed formwork design pressures and in a manner to avoid inclined construction joints.

2. Consolidate placed concrete with mechanical vibrating equipment according to ACI 303.1.

3. Do not use vibrators to transport concrete inside forms. Insert and withdraw vibrators vertically at uniformly spaced locations to rapidly penetrate placed layer and at least 6 inches ~~(150 mm)~~ into preceding layer. Do not insert vibrators into lower layers of concrete that have begun to lose plasticity. Do not permit vibrators to contact forms.

E. Cold-Weather Placement: Comply with ACI 306.1 and as follows. Protect concrete work from physical damage or reduced strength that could be caused by frost, freezing actions, or low temperatures.

1. When average high and low temperature is expected to fall below 40 deg F (4.4 deg C) for three successive days, maintain delivered concrete mixture temperature within the temperature range required by ACI 301.

2. Do not use frozen materials or materials containing ice or snow. Do not place concrete on frozen subgrade or on subgrade containing frozen materials.

3. Do not use calcium chloride, salt, or other materials containing antifreeze agents.

4. Do not use chemical accelerators unless otherwise specified and approved in design mixtures.

F. Hot-Weather Placement: Comply with ACI 301 and as follows:

1. Maintain concrete temperature below 90 deg F ~~(32 deg C)~~ at time of placement. Chilled mixing water or chopped ice may be used to control temperature, provided water equivalent of ice is calculated to total amount of mixing water. Using liquid nitrogen to cool concrete is Contractor's option.

2. Fog-spray forms, steel reinforcement, and subgrade just before placing concrete. Keep subgrade uniformly moist without standing water, soft spots, or dry areas.

3.6 FINISHES, GENERAL

A. Landscape Architectural Concrete Finish: Match Design Consultant's design reference sample (if provided), identified and described as indicated, to satisfaction of Design Consultant.

B. Related Unformed Surfaces: At tops of walls, horizontal offsets, and similar unformed surfaces adjacent to formed surfaces, strike off smooth and finish with a texture matching adjacent formed surfaces.

1. Continue final surface treatment of formed surfaces uniformly across adjacent unformed surfaces, unless otherwise indicated.

C. Maintain uniformity of special finishes over construction joints, unless otherwise indicated.

D. Finishes shall match approved sample panel. Provide three varying degrees of etch on the sample panels for review.

3.7 AS-CAST FORMED FINISHES

A. Smooth-Formed Finish: As-cast concrete texture imparted by form-facing material, arranged in an orderly and symmetrical manner with a minimum of seams. Remove fins and other projections exceeding specified limits on formed-surface irregularities. Repair and patch tie holes and defects.

B. Rubbed Finish: Apply the following to smooth-form-finished as-cast concrete where indicated:

1. Smooth-Rubbed Finish: Not later than one day after form removal, moisten concrete surfaces and rub with carborundum brick or another abrasive until producing a uniform color and texture. Do not apply cement grout other than that created by the rubbing process.

2. Grout-Cleaned Finish: Wet concrete surfaces and apply grout of a consistency of thick paint to coat surfaces and fill small holes. Mix one part portland cement to one and one-half parts fine sand with a 1:1 mixture of bonding admixture and water. Add white portland cement in amounts determined by trial patches so color of dry grout will match surrounding concrete. Scrub grout into voids and remove excess grout. When grout whitens, rub surface with clean burlap and keep surface damp by fog spray for at least 36 hours.

C. Buff-Wash Finish: Tamp, float, and trowel surfaces to the required planes. Evenly apply surface retarder to achieve an etch of 1/16” or at the rate approved from the submittal samples. Cover concrete and allow concrete to cure for a time period recommended by the surface retarder manufacturer's instructions - followed by washing the surface with clear water and bristle brush to expose the fines.

3.8 EXPOSED-AGGREGATE FINISHES

A. Scrubbed Finish: After concrete has achieved a compressive strength of from 1000 to 1500 psi), apply scrubbed finish. Wet concrete surfaces thoroughly and scrub with stiff fiber or wire brushes, using water freely, until top mortar surface is removed and aggregate is uniformly exposed. Rinse scrubbed surfaces with clean water. Maintain

continuity of finish on each surface or area of Work. Remove only enough concrete mortar from surfaces to match design reference sample or mockup.

B. High-Pressure Water-Jet Finish: Perform high-pressure water jetting on concrete that has achieved a minimum compressive strength of 4500 psi). Coordinate with formwork removal to ensure that surfaces to be high-pressure water-jet finished are treated at same age for uniform results.

1. Surface Continuity: Perform high-pressure water-jet finishing in as continuous an operation as possible, maintaining continuity of finish on each surface or area of Work. Maintain required patterns or variances in reveal projection to match design reference sample or mockup.

C. Sand-Blast Finish: Perform abrasive blasting after compressive strength of concrete exceeds 2000 psi Coordinate with formwork removal to ensure that surfaces to be abrasive blasted are treated at same age for uniform results.

1. Surface Continuity: Perform abrasive-blast finishing in as continuous an operation as possible, maintaining continuity of finish on each surface or area of Work. Maintain required patterns or variances in depths of blast to match design reference sample or mockup.

2. Abrasive Blasting: Abrasive blast corners and edges of patterns carefully, using backup boards, to maintain uniform corner or edge line. Determine type of nozzle, nozzle pressure, and blasting techniques required to match design reference sample or mockup.
3. Use same nozzle, nozzle pressure and blasting technique as used to prepare initial mock-ups. Exercise care to provide even and consistent strokes with air nozzle to minimize pockmarking of paving surface.

4. Cleanup and remove expended sand particles, concrete dust, loose aggregate, and other work-related debris at end of each day's blasting operations.

5. Depth of Cut: Use an abrasive grit of proper type and gradation to expose aggregate and surrounding matrix surfaces to match design reference sample or mockup, as follows:
   a. Brush: Remove cement matrix to dull surface sheen and expose face of fine aggregate; with no significant reveal.
   b. Light: Expose fine aggregate with occasional exposure of coarse aggregate and uniform color; with maximum reveal of 1/16 inch.
   c. Medium: Generally expose coarse aggregate; with slight reveal, a maximum of 1/4 inch.
   d. Heavy: Expose and reveal coarse aggregate to a maximum projection of one-third its diameter; with reveal range of 1/4 to 1/2 inch.

6. Cleanup and remove expended sand particles, concrete dust, loose aggregate, and other work-related debris at end of each day's blasting operations.

3.9 MISCELLANEOUS CONCRETE ITEMS

A. Filling In: Fill in holes and openings left in concrete structures, unless otherwise indicated, after work of other trades is in place. Mix, place, and cure concrete, as specified, to blend with in-place construction. Provide other miscellaneous concrete filling indicated or required to complete the Work.

B. Curbs: Provide monolithic finish to exterior curbs by stripping forms while concrete is still green and by steel-troweling surfaces to a hard, dense finish with corners, intersections, and terminations slightly rounded.

C. Site Furnishing Concrete Foundations and Post Foundations: Provide foundations as shown on Drawings.

3.10 CONCRETE PROTECTING AND CURING

A. General: Protect freshly placed concrete from premature drying and excessive cold or hot temperatures. Comply with ACI 306.1 for cold-weather protection and with ACI 301 for hot-weather protection during curing.

B. Begin curing cast-in-place Landscape Architectural concrete immediately after removing forms from concrete. Cure according to ACI 308.1, by one or a combination of the following methods that will not mottle, discolor, or stain concrete:

1. Moisture Curing: Keep exposed surfaces of cast-in-place Landscape Architectural concrete continuously moist for not less than seven days with the following materials:
   a. Water.
   b. Continuous water-fog spray.
   c. Absorptive cover, water saturated and kept continuously wet. Cover concrete surfaces and edges with 12-inch lap over adjacent absorptive covers.

2. Moisture-Retaining-Cover Curing: Cover concrete surfaces with moisture-retaining cover for curing concrete, placed in widest practicable width, with sides and ends lapped at least 12 inches, and sealed by waterproof tape or adhesive. Cure for not less than seven days. Immediately repair holes or tears during curing period; use cover material and waterproof tape.

3. Curing Compound: Mist concrete surfaces with water. Apply curing compound uniformly in continuous operation by power spray or roller according to manufacturer's written instructions. Recoat areas subjected to heavy rainfall within three hours after initial application. Maintain continuity of coating and repair damage during curing period.

3.11 FIELD QUALITY CONTROL

A. General: Comply with Division 03 Section "Cast-In-Place Concrete" for field quality-control requirements.

3.12 REPAIRS, PROTECTION, AND CLEANING

A. Repair and cure damaged finished surfaces of cast-in-place Landscape Architectural concrete when approved by Design Consultant. Match repairs to color, texture, and uniformity of surrounding surfaces and to repairs on approved mockups.

1. Remove and replace cast-in-place Landscape Architectural concrete that cannot be repaired and cured to Design Consultant's approval.

B. Protect corners, edges, and surfaces of cast-in-place Landscape Architectural concrete from damage; use guards and barricades.

C. Protect cast-in-place Landscape Architectural concrete from staining, laitance, and contamination during remainder of construction period.

D. Clean cast-in-place Landscape Architectural concrete surfaces after finish treatment to remove stains, markings, dust, and debris.

E. Wash and rinse surfaces according to concrete finish applicator's written recommendations. Protect other Work from staining or damage due to cleaning operations.

1. Do not use cleaning materials or processes that could change the appearance of cast-in-place Landscape Architectural concrete finishes.

END OF SECTION

SECTION 03 35 00 - CONCRETE FINISHING

PART 1 - GENERAL

1.1 SUMMARY

A. Section includes:

1. Finishing formed concrete surfaces and interior concrete flatwork.
2. This Section supplements Section 03 30 00.

1.2 QUALITY ASSURANCE

A. Sample panels:

1. Provide, at the site where acceptable to the Design Consultant, a 4-foot square minimum sample panel of each concrete finish proposed for the Work.
2. Repeat if the first one(s) proves unsatisfactory.
3. Approved panel shall be used as the standard for concrete finishes.
4. Remove and discard sample panel when no longer needed.

PART 2 - PRODUCTS

2.1 CONCRETE MATERIALS

A. As specified in Section 03 30 00.
B. Water: Fresh, clean, and free of oil and other materials injurious to concrete.

2.2 CONCRETE FINISHES

A. TBD.

PART 3 - EXECUTION

3.1 EXAMINATION

A. Joints in flatwork:

1. Set premolded expansion joint strip below finished surface with a slightly tapered, dressed, wood strip, temporarily secured to top of expansion strip to provide space for sealant, or use an extruded plastic strip, approved by the Design Consultant.
2. Install expansion joints in straight or curved lines as indicated within a tolerance not exceeding 1/4 inch in 10 feet.
3. After concrete finishing operations are completed, and concrete is cured, fill void formed by the strip with sealant as specified in Section 07 92 00. Provide joints where indicated and in all cases where concrete flatwork abuts vertical elements such as walls, columns and curbs.

3.2 GENERAL REQUIREMENTS

A. Finish concrete surfaces to produce a uniform appearance throughout area involved and throughout adjacent areas with the same treatment.

B. Where concrete finishing occurs adjacent to finished metal and similar surfaces, particularly where serrated or indented surfaces occur, remove all traces of cement film before allowing concrete to harden.

C. Use no troweling machines within 12-inch of electrical junction and outlet boxes set to finish flush with concrete floors.

1. Float and trowel such areas by hand with wood floats and steel trowels, using caution so that concrete is finished flush with box cover and matches adjacent surfaces.

D. Concrete stairs:

1. As soon as concrete is set up sufficiently to permit working, remove riser forms and finish treads and risers in a continuous operation, working from top to bottom.
2. Slope treads 1/8-inch from base of riser to nosing, run nosings straight and level to template.
3. Finish nosings and coves at junction of treads and vertical surfaces to a uniform profile throughout. Where abrasive nosings are indicated, embed them in the fresh concrete, level and centered on the tread.

E. Concrete finish will be considered defective and shall be repaired, when the repairs are acceptable to the Design Consultant, or removed and replaced with proper work conforming to Contract Documents, at no additional cost to City, when:

1. It does not match approved sample panels.
2. It is not true to lines and planes.
3. It is not properly troweled and surfaced as required, and varies in excess of tolerances specified.
4. Is scuffed or has a rough surface, except where required.
5. Does not connect properly to adjoining work.
6. Does not slope consistently to drains (has bird baths).
7. Is not properly cured.

3.3 MARKINGS

A. At control joints and elsewhere as indicated, provide markings with a rounded edging or marking tool, to a 1/4 inch radius. In textured work, edge and mark with a combination edging and smoothing tool approximately 1-1/2 inch wide.

B. Make markings within a tolerance not exceeding 1/4 inch in 10 feet.

C. Where indicated, provide cut markings sawn into surface of cured concrete. Coordinate this work with the work of other Sections to avoid damage to adjacent surfaces.

D. Complete sawcutting within 16 hours after casting.

E. Use sawcutting equipment specifically designed to cut 1/8-inch wide joints crisp, sharp, unchipped edges in newly cast concrete. Use cutting machine with a high speed (10,000 rpm minimum), self propelling without forcing the speed, with a 4-inch blade specially made for green concrete. Equipment and blades made by Soff-Cut Corp., Corona, CA, or equal that will provide similar results.

F. Make marking lines straight, or curved where required by the Drawings, equally spaced and parallel to adjacent lines and walls, edges and other construction, and of uniform depth and cross section, with intersections accurately formed. Continue markings to vertical surfaces interrupting the flatwork.

3.4 BUILT-IN ITEMS

A. Set items furnished under this or other Sections and finish to floor fixtures and other floor features as indicated. Adjust finish to properly connect and fit to other work. Slope floor to drain where indicated.

B. Floor drains and other items furnished and installed under other Sections: Finish concrete surface flush with rims unless detailed otherwise.

C. Exercise particular care with respect to drains to ascertain that they are installed at proper elevations to permit drainage. Do not proceed until corrective work is performed and accepted.

3.5 FINISHING FORMED SURFACES

A. TBD.

3.6 FLATWORK FINISHES

A. TBD.

END OF SECTION

SECTION 03 45 00 - PRECAST ARCHITECTURAL CONCRETE

PART 1 - GENERAL

1.1 SUMMARY

A. Section includes: ~~access panels not provided by other trades, but required for access to concealed equipment and assemblies.~~

1. ~~Design/build~~ Exterior precast concrete planks at amphitheater seating. The precast planks require deferred approval; they are design/build.
2. Precast concrete countertops.
3. Miscellaneous support, fasteners, and anchors.
4. Sealing joints between precast concrete units.

B. Work furnished but installed in other Sections: Division 03 for embeds to be cast in cast-in-place concrete.

C. Related Requirements:

1. Division 01 for LEED requirements
2. Divisions 03 and 32 for all other concrete work.

1.2 SUSTAINABLE DESIGN REFERENCE

A. USG Green Building Council (USGBC).

1.3 ADMINISTRATIVE REQUIREMENTS

A. Engineering responsibilities: Design Build/Delegated Design.

1. The precast concrete planks require deferred approval. They are not fully detailed on the Drawings, which indicate desired profile and design intent, and they have not been engineered.
2. The Contractor is responsible for the precast planks engineering, fabrication and installation to withstand loads and other criteria prescribed by Code, indicated, or specified, within the physical limitations indicated on the Drawings.
3. A California-licensed professional engineer employed by the Contractor shall prepare drawings and calculations for the work of this Section. Drawings and calculations, as specified above, shall be sealed and signed by the Contractor's design engineer.
4. Fasteners and connections where indicated are shown schematically.

   a. Fasteners or connections shall not conflict with or require revision of the finish profiles of the assemblies and the supporting work.
   b. Connections to the primary supports shall not impose eccentric loading, or induce twisting or warping.
   c. Connections to the primary supports shall be able to accommodate misalignment of the structure within limits allowed by the tolerances specified.

B. Design criteria:

1. Structural performance: Provide precast architectural concrete planks and connections capable of withstanding the following design loads within limits and under conditions indicated and specified without permanent damage to the precast units and the supporting structure.

a. Dead loads: Weight of the material.
b. Live loads: As prescribed by Code but not less than 100 psf.
c. Seismic loads: applicable earthquake design data including seismic coefficient and importance factor.

1.4 SUBMITTALS

A. Data:

1. Manufacturer Product Data listing all materials used in the precast concrete units together with evidence of compliance with accepted industry standards such as ANSI and ASTM.
2. Data stating that form release agent will not stain the concrete surfaces and will not adversely affect the bond of subsequently applied finishes.
3. Data for admixtures.

B. Shop Drawings:

1. Show plan, elevation and section of each unit, fabrication details, unit identification marks, reinforcement, connection details, dimensions and relationship to adjacent material in sufficient detail to cover manufacture, handling and erection.
2. Show location and details of anchorage devices to be embedded in other construction. Furnish templates, if required, for accurate placement.

~~a. Include erection procedure for precast units, sequence of erection, and erection tolerances.~~
~~b.~~a. ~~Show sealant joints, including expansion joints.~~ Identify sealants by make and number and/or name.

C. Preliminary Samples: Prior to fabrication of the full size Samples, submit 2-foot square plank and countertop Samples for Architect's preliminary approval of texture, color and finish.

D. Engineering calculations: Calculations signed and sealed by a California-licensed professional engineer, to demonstrate Code compliance for the precast planks.

1. Calculations shall be legible and shall incorporate sufficient cross references to shop drawings to make calculations readily understandable and reviewable. Test reports are an acceptable substitute for calculations for the anchors only. Calculations shall include the following:

a. Analysis of framing members.
b. Analysis of anchors, including anchors embedded in concrete.
c. Section property computations for framing members.
d. Seal and signature of design engineer.

2. Only the loading of the structure at the connections will be reviewed.

E. Certification: Certificate from Contractor's design engineer that he has visited the site and that to the best of his information, knowledge and belief, the precast plank units have been installed in accordance with his design.

F. LEED: LEED certification product data as specified in Section 01 81 13, "Sustainable Design Requirements", for the following LEED credits:

1. Credit MR 4.1 & 4.2, Recycled Content.
2. Credit MR 5.1, Regional Materials, Manufactured Locally.
3. Credit MR 5.2, Regional Materials, Harvested / Extracted Locally.

4. Credit MR 6, Rapidly Renewable Materials.
5. Credit EQ 4.1, Low Emitting Materials, Adhesives & Sealants.

1.5 QUALITY ASSURANCE:

A. Quality control testing and inspection reports:

1. Reports for the specified Source Quality Control and Field Quality Control inspections and tests.
2. Include water absorption test reports for units.

B. Design data: Provide complete structural engineering design calculations, including loads imposed on structure, prepared, signed and sealed by a California-licensed structural engineer.

1. Submit calculations for design modifications required to meet field conditions. Only the loading of the structure at the connections will be reviewed.
2. Certificate from design engineer that he has visited the site and that to the best of his information, knowledge and belief, the precast units have been installed in accordance with his design.

C. Admixtures: Certified test results and manufacturer's statements verifying that each admixture to be used in the work complies with specified requirements and is non-corrosive based on acceptable long-term testing.

D. Calculations:

1. Signed by the design engineer to demonstrate compliance of the assemblies with these Specifications and governing Building Code.
2. Submit calculations for design modifications required to meet field conditions. Only the loading of the structure at the connections will be reviewed.

E. Certification: Certificate from Contractor's design engineer that he has visited the site and that to the best of his information, knowledge and belief, the precast plank units have been installed in accordance with his design.

F. Mixes:

1. Proposed concrete mixes, and materials and cylinder test results to verify the fabricator's quality control procedures.
2. Written report for each type of mix design, with test reports and testing agency evaluation. Include product data for all admixtures.
3. Do not begin precast concrete production until the Architect has reviewed mixes and evaluations.

~~F.Record drawings: Revise the original approved shop and erection drawings to correspond with changes made in the field.~~

G. LEED: LEED certification product data as specified in Section 01 81 13, "Sustainable Design Requirements", for the following LEED credits:

1. Credit MR 4.1 & 4.2, Recycled Content.
2. Credit MR 5.1, Regional Materials, Manufactured Locally.
3. Credit MR 5.2, Regional Materials, Harvested / Extracted Locally.
4. Credit MR 6, Rapidly Renewable Materials.
5. Credit EQ 4.1, Low Emitting Materials, Adhesives & Sealants.

1.6 QUALITY ASSURANCE

A. Manufacturer's qualifications:
B. Certified by the Precast/Prestressed Concrete Institute Plant Certification Program at time of bidding. Certification shall be in Group A1. Firm shall have 10 years demonstrated capability to produce precast concrete products of the quality and complexity specified and indicated.

1. Manufacturer must be able to show that it has experienced personnel, physical facilities, established quality control procedures, and a management capability sufficient to execute the work shown on the Drawings and specified herein.
2. When requested by the Architect, obtain from the manufacturer written evidence of the above requirements and submit same to the Architect.

C. Design engineer qualifications: Professional structural engineer licensed to practice in California, and experienced in providing engineering services that have resulted in successful installation of architectural precast concrete units similar in material, design, and extent as indicated.
D. Plank sample unit:

1. The first unit of the plank production run will be used as a sample unit and must be approved by the Architect at the precast plant before similar unit fabrication proceeds.
2. Repeat sample unit when the first one is not satisfactory.
3. The approved unit can be used in the Work and will be used as a standard of quality. Clearly identify approved units on backside.

E. Engineering:

1. Contractor is responsible for the engineering of the units and their attachment to the building structure, and for obtaining approval of authorities having jurisdiction, and paying costs and fees therefore.
2. Engineer units to comply, as a minimum, with the performance criteria specified.
3. Engineering shall be performed by a California-licensed professional engineer.

1.7 HANDLING

A. Transport:

1. With equipment which will protect units from staining and damage.
2. Do not place precast units on ground.

B. Storage:

1. Store precast units to protect them from contact with soil and from other damage, in same position as transported, with non-staining, resilient supports located in same positions as when transported.
2. Store precast units on firm, level, and smooth surfaces so that identification marks are visible.

C. Handling: Lift and support units at designated lift points only.

1.8 COORDINATION

A. Design and fabrication:

1. Prepare precast units as required for attachment of anchoring devices.

2. Install precast-embedded items as required and supplied by other trades, and incorporate openings in units as required for penetrations and other work.
3. Coordinate this work with the work of other trades for attachments and other requirements.

B. Pre-erection:

1. Provide precast-embedded unit connection hardware, and furnish unit connection hardware to be welded to primary structure and embedded in cast-in-place concrete.
2. Supply drawings, templates, and/or instructions to jobsite as necessary for proper setting of items embedded in cast-in-place concrete. Supervise installation of embeds.

PART 2 - PRODUCTS

2.1 MANUFACTURER

A. Planks: One of the following, or equal:

1. Clark Pacific.
2. Willis Construction Co., Inc.
3. Walters & Wolf.
4. Coreslab Structures.
5. Stepstone, Inc.
6. Syndesis, Inc.
7. Or equal.

B. Countertops: Syndecrete, or equal.

2.2 REINFORCEMENT

A. Reinforcing bars: ASTM A 615, grade selected by the manufacturer.
B. Steel wire: ASTM A 82, plain, cold-drawn, steel.
C. Welded wire fabric: ASTM A 185.
D. Supports for reinforcement:

1. Bolsters, chairs, spacers and other devices for spacing, supporting and fastening reinforcing, complying with CRSI recommendations.
2. For exposed-to-view concrete surfaces, where legs of supports are in contact with forms, provide supports with plastic-coated legs of the same color as the precast units.

2.3 CONCRETE MATERIALS

A. Portland cement:

1. General: Where surfaces are exposed in final construction, each exposed surface shall be finished to match the Architect's control sample, regardless of location.
2. Face mix: White Portland cement complying with ASTM A 150, Type I or III. Use only one brand and type of cement throughout the Project, same as in approved sample panel.
3. Back-up mix: Same as above, except may be gray.

B. Aggregates:

1. ASTM C 33, non-reactive with other concrete materials. For face mix, match color of aggregates of approved sample panel.
2. Provide aggregates from a single source for all concrete.
3. Do not use aggregate larger than 1/5 of the narrowest dimension between sides of forms, nor 3/4 of the minimum clear spacing between individual reinforcing bars or bundles of bars.

C. Water: Potable, fresh.
D. Coloring pigments: Mineral oxide or carbon black harmless to concrete set and strength, stable at high temperature and in sunlight, and alkali-fast.
E. Admixtures: Selected by the manufacturer but subject to the Architect's approval.

2.4 CONNECTION MATERIALS

A. Steel plates: Structural quality, hot-rolled carbon steel, ASTM A 283, Grade C.
B. Steel shapes: ASTM A 36.
C. Anchor~~s~~ bolts: ASTM A 307, regular hexagon nuts and carbon steel washers.
D. Finish of exterior steel units: Galvanized in compliance with ASTM A 153~~, or cleaned to bright metal and shop coated with zinc-rich coating specified applied to a minimum dry film thickness of 8 mils~~..

2.5 FORM MATERIALS

A. Forms, and where required form facing materials, of metal, plastic, wood or other acceptable materials that are non-reactive with concrete and will produce the required finish surfaces.

2.6 ACCESSORIES

A. Bearing pads: As selected by the manufacturer, or installer, subject to the Architect's approval.
B. Grout:

1. Cement grout: Portland cement, ASTM C 150, Type I, and clean, natural sand, ASTM C 440.
2. Premixed, non-shrink grout: ASTM C 1107.

C. Shim stock:
D. ~~Forward of back face of units:~~ Non-ferrous metal or stainless steel.

~~3.All others: Non-ferrous metal or galvanized steel.~~

E. ~~Clips, hangers, and~~ Other accessories: As required for installation of precast units~~ and for support of construction or finishes attached to, or supported by precast units~~.

~~C.Zinc-rich metal primer: 2-component, solvent based, inorganic ethyl silicate zinc coating with minimum 75 percent zinc content in dry film.~~

F. Zinc-rich primer to touchup damaged galvanized surfaces: One-component, solvent based, zinc rich coating. Minimum 73 percent content in dry film.
G. Epoxy adhesive: 2-part waterproof, UV stable, non-shrink, polyester, epoxy or urethane adhesive compound which will not induce or support mildew and fungus growth, by Akemi North America, Bonstone Materials Corp., Laticrete International, or equal.
H. Sealants: As specified in Section 07 92 00.

2.7 PROPORTIONING AND DESIGN OF MIXES

A. Design mixes for each type of concrete specified shall be prepared by an independent testing agency or by an architectural precast manufacturing plant at precast fabricator's option.

B. Proportion mixes by either testing agency trial batch or field test data methods in accordance with ACI 211.1, using materials to be used on the Project, to provide normal weight concrete with properties as follows:

1. Compressive strength: 5,000 psi when tested in accordance with ASTM C 39.
2. Maximum water cement ratio 0.40 at point of placement.
3. Air-entrainment admixture to result in air content at point of placement complying with ACI requirements.
4. Water absorption maximum 6 percent by weight when tested in accordance with ASTM C 642.

C. Do not use separate mixes for facing and back-up ~~mixes shall be designed and placed so as to result in a single, monolithic construction of units~~.

D. After production is started, do not change mix design without Architect's authorization.

2.8 FABRICATION

A. General:

1. Manufacture precast concrete units indoors, in compliance with approved Shop Drawings and to match approved Samples and mockups.
2. Fabricate precast concrete units complying with the manufacturing and testing procedures, quality control recommendations, and dimensional tolerances of PCI MNL-117, and as specified for the type of units required.
3. Place welded wire fabric and reinforcing bars of sizes and spacings to resist shrinkage, temperature, and handling stresses and to achieve design requirements.

B. Cast-in anchors, inserts, plates, angles, and other anchorage hardware:

1. Fabricate anchorage hardware with sufficient embedment to comply with design requirements.
2. Accurately position for attachment of loose hardware, and secure in place during precasting operations. Locate anchorage hardware where it does not affect position of main reinforcement or concrete placement.
3. Furnish loose steel plates, clip angles, seat angles, anchors, dowels, cramps, hangers, and other hardware shapes for securing precast concrete units to supporting and adjacent construction.
4. Locate handling/lifting inserts to be invisible in the Work, after indicated finishes are installed, and inboard of all primary and secondary sealant joints. Patching of inserts on exposed plank faces is not permitted.
5. Cast-in contrasting color embed on precast planks and stair treads~~reglets, slots, holes, and other accessories in precast architectural concrete units to receive work by others as indicated~~.
6. Do not relocate bearing plates in units unless acceptable to the Design Consultant~~Architect~~.

C. Cast-in holes for openings in compliance with final shop drawings; coordinate this work with other trades when necessary.

D. Mix concrete as specified in Section 03 30 00.

E. Forms:

1. Accurately construct forms, mortar-tight, and of sufficient strength to withstand the pressures due to concrete placement, consolidation, finishing temperature changes, and de-forming, without objectionable deflection and failures.
2. Maintain forms to provide completed precast units of the shapes, lines, and dimensions indicated, within the specified fabrication tolerances. Coat surfaces of forms with a bond-breaking compound before reinforcement is placed.
3. Coat forms with compound that will not bond with, stain nor adversely affect concrete surfaces, and will not impair subsequent treatments of concrete surfaces requiring bond or adhesion. Apply coating in compliance with its manufacturer's instructions.

F. Reinforcement: Comply with recommendations in CRSI's "Manual of Standard Practice" and PCI MNL 117 for fabricating, placing, and supporting reinforcement.

1. Clean reinforcement of loose rust and mill scale, earth, and other materials that reduce or destroy the bond with concrete.
2. Accurately position, support, and secure reinforcement against displacement during concrete-placement and consolidation operations. Completely conceal support devices to prevent exposure on finished surfaces.
3. Place reinforcement to maintain at least 3/4-inch minimum coverage. Arrange, space, and securely tie bars and bar supports to hold reinforcement in position while placing concrete. Direct wire tie ends away from finished, exposed concrete surfaces.
4. Install welded wire fabric in lengths as long as practicable. Lap adjoining pieces at least one full mesh and lace splices with wire. Offset laps of adjoining widths to prevent continuous laps in either direction.

G. Placing concrete:

1. Place concrete in a continuous operation to prevent the formation of seams or planes of weakness in precast units. Comply with ACI 304. Do not add water after concrete batching.
2. Thoroughly consolidate placed concrete by internal and external vibration without dislocating or damaging reinforcement and built-in items. Use equipment and procedures complying with PCI MNL 117.

H. Identification:

1. Identify units with permanent mark to identify pick-up points and orientation in the structure.
2. Comply with the markings indicated on the final shop drawings.
3. Imprint the date of casting on each precast unit where it will not show in the finished structure.

I. Curing: Cure units by low-pressure steam, by steam vapor, by radiant heat and moisture, or other similar process to accelerate concrete hardening and to reduce the curing time.

J. Finish:

1. Surfaces to be concealed in the Work: Normal plant-run-finish produced in forms that impart a smooth finish to the concrete. Small surface holes caused by air bubbles, normal form joint marks, and minor chips and spalls will be tolerated, but no major or unsightly imperfections, honeycomb, or structural defects will be permitted.
2. Exposed surfaces: Match Architect’s control samples and approved mockup.

K. Fabrication tolerances: Fabricate precast architectural concrete units straight and true to size and shape with exposed edges and corners precise and true so each finished precast unit complies with PCI MNL 117 product tolerances as well as position tolerances for cast-in items.

2.9 FABRICATOR'S TESTING LABORATORY

A. General: In addition to requirements of the Contractor's quality control program, conduct the following inspection tests and submit reports of the results.
B. Compression tests: In accordance with ASTM C 31 and C 39.

1. Sample at point of deposit. Every 50 cubic yard or fraction thereof.
2. Make one set of 3 cylinders from a single concrete in same manner as precast element, and test at transfer strength age.
3. Cure 2 cylinders in laboratory, and test at the age of 28 days.

C. Air content test, ASTM C 173, air-entrained concrete: First batch and every 10th batch thereafter.
D. Slump test, ASTM C 143: First batch each day, each sample for cylinders, and as often as necessary thereafter. Provide a slump cone and rod available at all times.
E. Compression test reports: In addition to reporting as outlined in ASTM C 39, present the following data in tabular form and distribute immediately after recording the test results.

1. Project name, Contractor, supplier.
2. Identity of mixes and required strength.
3. Identity of elements cast with sampled, air temperature, concrete temperature, and consistency.
4. Slump, air content, time and date samples, air temperature, concrete temperature, consistency.
5. Curing history.
6. Date cast, date tested, and age.
7. Compressive strength.
8. Type of fracture.
9. Compliance with Specifications (yes or no).

PART 3 - EXECUTION

3.1 EXAMINATION

A. Examine bearing surfaces, inserts and adjacent construction for conditions that would adversely affect this work.
B. Correct detrimental conditions before proceeding with installation.

3.2 INSTALLATION

A. Lift, place, and secure units in compliance with their manufacturer's instructions and final Shop Drawings, keeping units tight and perpendicular to bearing supports.
B. Set units straight, level (using concealed shims), plumb, and square within the tolerances specified. Maintain horizontal and vertical joint alignment and uniform joint width as erection progresses.
C. Do not install damaged units.
D. Do not install units until supporting members are in place and secured.
E. Shore members during erection where necessary to minimize camber between adjacent units.

F. Lift units so as not to cause damage, distortion or undue stresses in the assemblies. Comply with manufacturer's directions.

G. Set units dry, without mortar, attaining specified joint width with lead, plastic, or hot-dip galvanized steel spacers.

~~H. Remove projecting hoisting devices and use sand-cement grout to fill voids within recessed hoisting devices flush with surface of concrete.~~

H. Fastening:

1. Fasten units in place in accordance with the approved Shop Drawings.
2. Tighten bolted connections with equal torque.
3. Secure bolts with lockwashers or tack-weld nut to bolt.
4. At bolted connections, use lock washers or other acceptable means to prevent loosening of nuts.
5. Provide temporary erection anchorage for welded connections.

I. Install flexible bearing pads where necessary, as precast units are being erected. Set pads on level, uniform bearing surfaces and maintain in correct position until precast units are placed.

J. Weld in compliance with AWS D1.1 and D1.4, including qualification of welders. Protect units from damage by field welding. Provide non-combustible shields where required.

K. Repair damaged primer and galvanizing of steel surfaces by cleaning to bright metal and applying a coat of zinc-rich paint.

L. Remove shims and spacers from joints after units are permanently anchored but before installing sealant. Seal joints between units watertight in compliance with the requirements of Section 07 92 00.

3.3 INSTALLING COUNTERTOP

A. Anchor countertop securely to supports by embedding in structural epoxy adhesive on pre-set stainless steel dowels, or by drilling and setting dowels in structural epoxy adhesive. When shimming, use plastic shims completely embedded in epoxy adhesive.

B. Seal interface of countertop with contiguous surfaces as specified in Section 07 92 00.

3.4 INSTALLATION TOLERANCES

A. Comply with the tolerances listed in PCI MNL 117, Appendix I or ACI 533R.

3.5 PATCHING

A. When a precast unit is damaged after installation, patching will be permitted only with the Design Consultant~~Architect~~'s approval. When patching is authorized, mix and place patching mixture to match texture and color of surrounding concrete and to minimize shrinkage.

B. Adhere patch to hardened concrete with a non-staining, compatible, permanent bonding agent.

C. Replace defective precast units if patching is not acceptable to Design Consultant~~Architect~~. Units may be rejected for non-conformance with these Specifications and the following:

1. Ragged or irregular edges.
2. Excessive air voids evident in the exposed surface.
3. Adjacent flat and return surfaces with a noticeable difference in exposure.
4. Casting lines.
5. Visible form joints or irregular surfaces.
6. Rust stains on exposed surfaces.
7. Units not matching approved sample or non-uniformity of color and texture within a plank or in adjacent units due to areas of variable aggregate concentration and variations in depth of exposure.

8. Blocking stains or acid stains evident on exposed plank or countertop surface.
9. Foreign material embedded in the face.
10. Visible repair.
11. Reinforcement shadow lines.
12. Cracks visible after wetting.

3.6 FIELD QUALITY CONTROL

A. Testing: The City~~Owner~~ will engage a qualified independent testing and inspecting agency to perform the following field tests and inspections for field welds~~ and connections using high-strength bolts~~.

1. Testing agency will report test results promptly and in writing to Contractor and Architect.
2. Contractor shall remove and replace work that does not comply with specified requirements.
3. Additional testing and inspecting, at Contractor's expense, will be performed to determine compliance of corrected work with specified requirements.

B. Certificate: Submit a certificate from Contractor design engineer that he/she has visited the site and that to the best of his/her information, knowledge and belief, the precast ~~units~~ planks have been installed in accordance with his/her design.

3.7 CLEANING/TOUCHING-UP/PROTECTING

A. Before and after installation, clean soiled exposed concrete surfaces using fiber brush and sponge, and rinse thoroughly with clean water.
B. Use extreme care to prevent damage to concrete surfaces and to adjacent materials when cleaning.
C. Protect edges of precast units in high traffic areas by boarding securely attached in place without damaging the units.

END OF SECTION

SECTION 04 22 00 - CONCRETE UNIT MASONRY

PART 1 - GENERAL

1.1 DESCRIPTION

A. Section Includes: Provision of concrete masonry work, including but not limited to, masonry units, mortar, grout, reinforcing steel, control joints, testing and inspection.

B. Related Sections:

1. Section 03 20 00 – Concrete Reinforcement and Embedded Assemblies.~~ing.~~
2. Section 03 30 00 – Cast-in-Place Concrete.
3. Section 05 12 00 – Structural Steel Framing.
4. Section 07 18 00 – Water Repellant Coatings.
5. Section 01 81 13 - "Sustainable Design Requirements"~~Section 01 81 13 - "SUSTAINABLE DESIGN REQUIREMENTS": LEED Requirements~~

1.2 REFERENCES

A. Requirements of the GENERAL CONDITIONS and DIVISION NO. 1 apply to all Work in this Section.

B. Published specifications, standards, tests or recommended methods of trade, industry or governmental organizations apply to Work in this Section where cited by abbreviations noted below (latest editions apply).

1. California Building Code (CBC), 2010 Edition.
2. American Concrete Institute (ACI):

   a. "Building Code Requirements for Masonry Structures," ACI 530-05 / ASCE 6-05 / TMS 602-05 (ACI 530).
   b. "Specifications for Masonry Structures," ACI 530.1-05 / ASCE 5-05 / TMS 402-05 (ACI 530.1).
   c. "Manual of Standard Practice for Detailing Reinforced Concrete Structures" (ACI 315).

3. American Society for Testing and Materials (ASTM).

   a. "Specification for Quicklime for Structural Purposes" (ASTM C5).
   b. "Specification for Load Bearing Masonry Units" (ASTM C90).
   c. "Test Method Sampling and Testing Concrete Masonry and Related Units" (ASTM C140).
   d. "Specification for Portland Cement" (ASTM C150).
   e. "Standard Specification for Aggregate for Masonry Mortar" (ASTM C144).
   f. "Specification for Hydrated Lime for Masonry Purposes" (ASTM C207).
   g. "Specification for Mortar for Unit Masonry" (ASTM C270).
   h. "Standard Specification for Aggregate for Masonry Grout" (ASTM C404).
   i. "Specification for Grout for Masonry" (ASTM C476).

4. US Green Building Council (USGBC), www.usgbc.org

1.3 QUALITY ASSURANCE

A. All masonry work shall comply with the standards and requirements of the above references. Where discrepancies exist between the references and the Contract Documents, the requirements of the Contract Documents shall govern.

B. Allowable Tolerances:

1. Unit masonry shall be fabricated within 1/8-inch of dimensions noted.
2. The maximum variation from plumb of walls shall be 1/8” in 20 feet.
3. Joints shall have a uniform thickness of 3/8” unless otherwise noted. Joints shall not vary more than 1/16” in adjacent courses within two feet and shall not be less than 5/16” thick and not greater than 7/16” thick.
4. Constructed masonry shall comply with the tolerances specified in ACI 530.1, article 3.3.

C. Reinforcing Steel:

1. Reinforcing steel shall not be permitted to rust where there is danger of staining exposed surfaces of adjacent concrete.
2. The Contractor shall replace rust-stained concrete and/or masonry at his expense.

D. Examination Criteria: All examinations, selections and approval shall be for the purpose of achieving a final installation of the unit masonry with the greatest possible uniformity of appearance and structural integrity based on the following criteria:

1. Testing and quality assurance measures outlined in this specification.
2. Color and texture shall match the approved mock-up for range, random variation and finish. The quality of construction shall match the approved mock-up.
3. Conformance to the contract documents and approved shop drawings within specified dimensions and tolerances.
4. Only one source for concrete masonry units shall be used throughout the work.
5. Other criteria as specified in this Section.
6. Non-conformance with any or all of the above criteria shall be grounds for removal and replacement of the work without expense to the Owner. The Architect shall determine if the work complies with the above criteria.

1.4 QUALITY ASSURANCE

A. The Owner’s Testing Agency will:

1. Collect plant certificates from the Contractor for concrete masonry units, stating that all units have been properly cured before shipment and that they conform to all the requirements of these specifications. All masonry units shipped without certification will be rejected.
2. Field test masonry unit moisture content prior to block installation. See Section 3.07, Field Quality Assurance.
3. Submit material test reports indicating and interpreting test results relative to compliance with the tests described in this Section and Section 3.07 Field Quality Assurance.

1.5 SUBMITTALS

A. Manufacturer’s literature: Submit manufacturer’s literature describing products, including mix designs, history of compression tests, and mixing requirements as they apply to each different masonry unit, accessory and other manufactured product to be used in the unit masonry construction. Literature shall include, but not be limited to, preformed rubber control joints and all additives.

B. Certificates:

1. Submit material certificates for the following signed by the manufacturer and the Contractor certifying that each material complies with requirements designated.

   a. Each material and grade of reinforcing bars. See Section 03 20 00, Concrete Reinforcing.
   b. Each type and size of anchors, inserts, ties and accessories.

2. The Contractor shall submit a certificate of compliance with the standards designated.
3. Submit plant certificates for all concrete masonry units to the Owner's Testing Agency and Architect, stating that all units have been properly cured before shipment and that they conform to all requirements of these specifications, including but not limited to, requirements for moisture content per ASTM C90.

C. Mix Designs: Submit mix designs for mortar and grout where the proportions do not comply with CBC Table 2103.8(1) for mortar and Table 2103.12 for grout. Mix designs shall include a history of compression tests that substantiate the compressive strength of the mix in accordance with CBC section 1905.2. Submit the manufacturer's literature for grout admixtures.

D. Unit Samples: Submit sample concrete masonry units in each color and texture combination specified

E. Samples: Submit samples of all accessories embedded in masonry.

F. Mill Test: Submit mill test reports for all reinforcing steel.

G. Extreme Weather Procedures: Submit cold and hot-weather construction procedures evidencing compliance with requirements specified in ACI 530.1, CBC, and these specifications.

H. Shop Drawings: Coordination and shop drawings for all concrete masonry unit walls. Drawings shall consist of elevations and sections indicating materials and assembly, color surface finish, courses and reinforcing.

1. The shop drawings shall illustrate detailing, fabrication, bending and placement of unit masonry reinforcing bars. Comply with ACI 315 showing bar schedules, stirrup spacing, diagrams of bent bars and arrangements of masonry reinforcement. The shop drawings shall also indicate the location of all conduit, plumbing and other items embedded in unit masonry walls and coordinate this work with the placement of the unity masonry reinforcement.
2. All shop drawings shall be drawn to scale.

I. Mock-Up: Prior to installing concrete masonry units, construct the following out-of-sequence mock-up for each form of construction and finish required to demonstrate aesthetic effects and qualities of materials and installation. Build mock-up to comply with the following requirements:

1. Submit shop drawings of the mock-up showing plan and elevation, mock up wall footing and lateral bracing.
2. Locate on site in the location and size as directed by the Architect.
3. Notify the Architect 7 days in advance of the dates and times when mock-up will be constructed.
4. CMU exterior wall corner with installed window and precast sill: The mock-up shall be 8 feet long on one wall and 4 feet long on the other wall. The walls shall meet at an exterior outside corner. Both walls shall be 6'-0" high. The mock-up shall also demonstrate a vertical joint with the glazed curtain wall system, a vertical expansion joint with sealant and a continuous parapet cap over the CMU walls. The window shall be located in the center of the 8' wall of the mock-up. Include required application of masonry sealer or water repellant coating.
5. Demonstrate the proposed maximum range of color and texture variation and the quality of workmanship.
6. Obtain the Architect's approval of mock-ups before beginning installation.
7. Retain and maintain mock-up during construction in an undisturbed condition as a standard for judging the completed work. Remove from the site and properly dispose of mock-ups, with the Architect's approval, at the end of Substantial Completion.

J. . LEED certification data as specified in Division 1, Section 01 81 13, "Sustainable Design Requirements", for the following LEED credits:

1. Credit MR 4.1 & 4.2, Recycled Content
2. Credit MR 5.1 & 5.2, Regional Materials, Manufactured and Harvested / Extracted Locally
3. Credit MR 6, Rapidly Renewable Materials
8. Credit MR 7, Certified WoodLEED certification product data as specified in Division 1, Section 01 81 13, "SUSTAINABLE DESIGN REQUIREMENTS", for the following LEED credits:

10. Credit MR 4.1 & 4.2, Recycled Content
11.4. Credit MR 5.1 & 5.2, Regional Materials, Manufactured & Harvested / Extracted Locally

1.6 PRODUCT DELIVERY, STORAGE AND HANDLING

A. Deliver and store packaged material in original containers with seals unbroken and labels intact until time of use.
B. At the time of delivery to the site, masonry units shall conform to the linear shrinkage requirements of ASTM C90.
C. Unload and inspect each masonry unit carefully and store on raised platform protected from weather so as to meet ASTM C90 requirements at the time of laying and grouting. Reject and remove from the site all material not conforming to specification requirements. In addition to lack of conformance to manufacturers' specifications, masonry units shall be rejected if:

1. The color or texture of the concrete masonry units deviates from the range of colors and textures displayed on approved mock-up, as determined by the Architect.
2. Concrete masonry units that are chipped, cracked, or otherwise damaged.

D. Protect cementitious materials against exposure to moisture. Use of cementitious or other materials that have become caked and hardened from absorption of moisture will not be permitted.
E. Prior to installation, unload concrete masonry units onto working pallets as described in Section 3.02.D.

1.7 JOB CONDITIONS

A. Environmental Conditions:

1. Do not place unit masonry when temperature is below 40 degrees Fahrenheit, unless the Architect approves and the Contractor provides means for preventing damage from freezing before and after placement.
2. Do not place unit masonry when temperature is above 100 degrees Fahrenheit or above 90 degrees Fahrenheit with a wind velocity greater than 8 miles per hour, unless the Architect approves and the Contractor provides means for preventing damage from freezing before and after placement.

B. Protection:

1. Protect surrounding work as required against damage from masonry work.
2. Clean satisfactorily and correct damage to surrounding work resulting from masonry work.
3. The contractor shall take all means and precautions necessary to protect masonry units from moisture absorption during shipping, storage on site, placement prior to grouting of wall, during wall construction until the masonry wall is completed and water repellant coating is applied.

PART 2 - PRODUCTS

2.1 MATERIALS

A. Hollow Load-Bearing Concrete Masonry Units: As manufactured by Basalite, Calstone, or approved equal. Medium weight (115 pcf) open end type concrete block size 8 x 8 x 16-inches or 12 x 8 x 16-inches, conforming to ASTM C90, (0.065 maximum allowable linear shrinkage). Provide compressive strength as required by CBC Table 2105.2.2.1.2 for the specified compressive strength of masonry indicated on drawings. The colors listed are Basalite. Submitted colors must match Basalite colors.

1. Precision Face; Color – standard grey.

B. Portland Cement: ASTM C150, Type II.
C. Aggregates:

1. For Mortar: ASTM C144.
2. For Grout: ASTM C404.

D. Hydrated Lime; ASTM C207, Type S.
E. Quick Lime: ASTM C5.
F. Reinforcing Bars: Comply with the requirements of Section 03 20 00, Concrete Reinforcing.
G. Water: Clean and potable, free from impurities detrimental to mortar and grout.
H. Expansion Joints: Preformed rubber in profiles required or shown. Same as Sonneborn-Contech's "Masonry Control Joints"; Dur-O-Wal National Inc.'s "Rapid Control Joint"; or equal product substituted per Section 01630.
I. Mortar Coloring: Mineral oxide type.
J. Additives and Admixtures: Required in all grout to reduce early water loss to the masonry units and produce expansive action in the plastic grout to offset the initial shrinkage and promote bonding of grout to the interior masonry unit surfaces. Use Grout Aid by Sika Corporation or approved equal. Obtain approval of admixture by Architect, Structural Engineer and Owner's Testing Agency.
K. Water Repellant Coating: As specified in Section 07180, Water Repellant Coating.

2.2 FABRICATION

A. Concrete Masonry Units: Blocks shall have been air cured for not less than 28 days.
B. Reinforcement:

1. Shop-fabricate to comply with Drawings.
2. Conform to requirements of ACI 315 where specific details are not shown or where Drawings and Specifications are not more demanding.

2.3 MIXES AND MIXING

A. Mortar:

1. Conform to ASTM C270, Type S.

a. Compressive Strength: Minimum 1,800 psi after 28 days.
b. Proportions by Volume: Shall be as shown in CBC Table 2103.8(1).

2. Mix in batch mechanical mixer permitting accurate control of water amounts. Site mixing of mortar shall not be permitted without review and acceptance of Contractor's procedure by the Owner's Testing Agency and the Structural Engineer.

a. Place approximately half of the required water and sand into the mixer while turning.

b. Add cement and remainder of the sand and water into mixer in that order and mix materials for at least three minutes with minimum of water to produce workable consistency.
c. Add lime and continue mixing as long as required to secure a uniform mass.
d. Total mixing time may not be less than 3 minutes or more than 10 minutes.
e. Use and place mortar in final position within 2½ hours after mixing. Mortar that have stiffened as a result of evaporation of water may be re-tempered with water as frequently as required to restore required consistency during this time period.

B. Grout:

1. Compressive Strength: Minimum 2,000 psi after 28 days.
2. Slump: 9- to 10-inches. Use sufficient water to make a workable mix that will flow into all joints of the masonry units with typical rates of absorption for ASTM C90. The slump of the grout should be approximately 9 to 10 inches depending on temperature and humidity conditions.
3. Proportions by Volume: Shall be per CBC Table 2103.12. Alternately, the contractor shall submit a grout mix design with a history of compression tests that substantiate the compressive strength of the mix in accordance with CBC section 1905.2.
4. Use grout aid in all grout to reduce early water loss to the masonry units and produce an expansive action in the grout sufficient to offset initial shrinkage. Mix grout admixture in accordance with the manufacturer's recommendations and requirements.
5. Grout to comply with ASTM C476 and CBC sections 2103.12.1, 2103.12.2, and 2103.12.3 for materials and mix requirements.
6. Site mixing of grout shall not be permitted without review and acceptance by the Structural Engineer.

C. General Mixing Requirements:

1. Measure materials accurately.
2. Shovel measurements will not be permitted.
3. Use mechanical mixer of at least one-sack capacity.
4. Completely empty drum before charging succeeding batch of materials.
5. Exercise extreme care in measuring ingredients for partial batches.

2.4 SOURCE QUALITY CONTROL

A. The Owner's Testing Agency will:

1. Collect mill test reports for reinforcements under Section 1.04.
2. Take samples of reinforcement and test per Specification 03 20 00, Section 1.03.D.
3. Sample and test concrete masonry units as required by the Unit Strength Method in conformance to CBC 2105.2.2.1. Test for compressive strength, unit weight, absorption and moisture content in accordance with ASTM C140.
4. Test for moisture content and drying shrinkage in accordance with ASTM C426.

PART 3 - EXECUTION

3.1 INSPECTION

A. Examine areas to receive masonry and verify the following:

1. Foundation surface is level to permit bed joint within range of 1/4- to 3/4-inch.
2. Edge is true to line to permit projection of masonry to less than 1/4-inch.
3. Projecting dowels are free from loose scale, dirt, concrete, or other bond-inhibiting substances and properly located.

B. Do not begin before unsatisfactory conditions have been corrected.

3.2 PREPARATION

A. Clean concrete surfaces to receive masonry.
B. Remove laitance or other foreign material lodged in surface by sandblasting or other means as required.
C. Ensure masonry units are clean and free from dust, dirt, or other foreign materials before laying.
D. Roughen concrete below walls to expose aggregate; remove loose particles and in hot weather, dampen concrete surfaces before laying blocks. Contact surfaces of all foundations and floors that are to receive masonry work are to be mechanically roughened to 1/4" amplitude.
E. Ensure random color variations in the installation of CMU. Unload from three delivered pallets onto a "working" pallet to be used for construction. Alternate among pallets when unloading to ensure a mix of CMU on the working pallet.

3.3 REINFORCEMENT

A. Place bars where noted in accordance with ACI 315, ACI 530 section 1.13, and ACI 530.1 section 3.4. Do not disturb after start of masonry placement.
B. All horizontal reinforcement shall be laid in bond beam units.
C. Minimum clearance between bar and CMU is ½-inch or one bar diameter, whichever is greater. Minimum clearance between parallel bars is 1-inch or one bar diameter, whichever is greater. Minimum clearance between vertical bars in a column or pilaster is 1½ -inch or one and one half bar diameters, whichever is greater.
D. Horizontal and vertical reinforcing shall be held in position by wire positioners or spacing devices near ends and at intervals not to exceed 200 bar diameters, and as required to prevent displacement by construction loads or placement of grout beyond the tolerances allowed by ACI 530.1 section 3.4B, item 7.

3.4 PLACEMENT

A. General Requirements:

1. Ensure masonry units are sound, clean and free of cracking, chipping and broken edges at time of placement.
2. Accurately cut and fit units as required to accommodate other work using masonry saws.
3. Lay masonry units plumb, true to line, with level courses accurately placed.
4. Adjust unit to final position while mortar is soft and plastic.
5. Align vertical cells accurately.
6. Remove units disturbed after stiffening of mortar, clean joints, and relay unit with fresh mortar.
7. In hot weather, moisten contact surfaces of the masonry units to receive mortar immediately before laying to prevent excessive drying of mortar.
8. Do not lay up one tier of wall more than 16-inches ahead of other tier.
9. Where necessary to stop longitudinal run, rack back one-half block length in each course.
10. Do not attach construction supports to walls, except where permitted by the Architect.

11. Install anchors, bolts, and other embedded items accurately as work progresses and prior to grouting.
12. Masonry installer and reinforcing steel installer shall meet and coordinate placement of reinforcing steel prior to placement of concrete or grout.

B. Joints:

1. Fill joints to thickness noted: Ensure full coverage of face shells in both horizontal and vertical joints and on webs.
2. Tool joints as specified on the drawings and achieve solid, smooth, watertight, compacted joints.
3. Joints Exposed to Weather: Point with pointing tools making solid, smooth, watertight joint well bonded to masonry at edges.
4. Immediately fill holes made by line pin with mortar when pin is withdrawn.
5. Remove surplus mortar from joints.

C. Cold Weather Requirements:

1. When daily temperature is below 40 degrees F., ensure reinforcing, masonry units, etc., contacting mortar, and grout are free of frost. Comply with CBC section 2104.3 and ACI 530.1 article 1.8C for cold weather requirements.
2. Protect all mortar and grout from freezing for at least 48 hours after installation whenever temperature falls below 40 degrees F.
3. Maintain mortar and grout at temperature no lower than 50 degrees F., while being used and until installed.
4. In freezing or near freezing weather, provide equipment of adequate size for heating of mortar and grout.
5. Do not add water to mix at temperature greater than 140 degrees F.

D. Hot Weather Requirements:

1. Implement the requirements of approved Hot Weather construction procedures when ambient air temperature exceeds 100 degrees F or 90 degrees F with a wind velocity greater than 8 mph. Comply with CBC section 2104.4 and ACI 530.1 article 1.8D for hot weather requirements

E. Protection:

1. Protect face materials against staining.
2. Remove misplaced grout or mortar immediately.
3. Protect sills, ledges, offsets, and similar items from mortar drippings or other damage during construction.

F. Requirements for Walls to be Grouted by High-Lift Method:

1. Lay up walls full story prior to grouting. Brace walls adequately to resist wind lateral and other forces.
2. Build vertical grout barriers or dam of solid masonry across grout space at no more than 25-feet on centers to control horizontal flow of grout.
3. Provide cleanouts by leaving out every other unit in bottom course; seal after inspection and before grouting. Face shell plugs shall have a 24 hour cure time and be adequately braced to resist grout pressure.
4. During laying up, remove mortar fins and other foreign matter from grout space with stick and compressed air.
5. Grout shall be a high slump workable mix placed by pumping.
6. Use mechanical vibrators for consolidation.
7. Grout is to be reconsolidated after it has taken on a plastic consistency but prior to taking on initial set.

8. A “pour” is considered as the entire height of grout fill placed in one day and is composed of a number of successive placed grout lifts. A “lift” is the layer of grout placed in a single continuous operation.
9. Maximum height of pour will be twelve feet for eight inch walls, sixteen feet for twelve inch walls.

G. Concrete Masonry Units:

1. Bond: Running bond, unless specifically noted otherwise.
2. Joint Thickness: 3/8-inch, both vertically and horizontally.
3. Joint Treatment:

   a. Where exposed, all mortar joints shall be tooled joints.
   b. Where concealed, cut off mortar flush with face of work using trowel.

4. Use double open ended beam units to the extent practical. At no time should blocks with closed ends be placed back to back. Use proper units to provide for windows, doors, bond beams, lintels, pilaster, etc., in order to minimize cutting.
5. Do not wet units.
6. Align vertical cells to provide continuous, unobstructed opening for grouting.
7. Corners: Provide standard masonry bond by overlapping units.

3.5 GROUTING

A. Requirements:

1. Use high-lift or low-lift grouting, at the Contractor’s option. Do not pour grout until mortar has set and cured, 36 hours minimum. Grout walls as soon as possible after mortar has cured.
2. Grout all cells of concrete block.
3. Ensure grout flows into voids and completely surrounds reinforcing steel.
4. Stop grout approximately 1-1/2 inches below top of last course (1/2” at bond beams with horizontal steel), except at top course, bring grout flush with top of block.
5. Grout from inside face of masonry wherever possible.
6. Where necessary to stop longitudinal run, provide suitable dam to retain grout in place.
7. Do not wet down grout spaces prior to grouting.

B. Low-Lift Grouting:

1. Pour grout to a maximum height of 4-feet, stopping 1-1/2-inches below top of unit except at bond beam units with horizontal steel the grout shall be stopped 1/2-inch below top of unit.
2. Delay 3 to 5 minutes allowing the excess of water to be absorbed by the masonry unit, then consolidate by vibrating.
3. Layup and grout next 4-feet of wall height.

C. High Lift Grouting:

1. Ensure cleanout has been sealed before grouting.
2. Pour first lift to a depth not in excess of 4 feet, with a waiting period between subsequent lifts of thirty to sixty minutes, sufficient to permit grout to become plastic but not set.
3. Place the first lift of grout to a uniform height, wait 3 to 5 minutes, and mechanically vibrate thoroughly to fill all voids. Subsequent lifts should be poured and alternate cells vibrated twelve inches to eighteen inches into the preceding lift.
4. Complete pour in sequence with other lifts not in excess of 4 feet.

5. If grout pour is 6-feet or less, it may be placed in one lift. If total pour exceeds 6-feet, the grout shall be placed in 4-foot lifts.
6. Grouting operations shall be conducted such that pours are limited to successive lifts which can be placed within one hour of the preceding lift.
7. Reconsolidate the top lift after the required waiting period to fill any space left by settlement and shrinkage.
8. Repeat the waiting, pouring, and reconsolidation steps until the top of the day's pour is reached.
9. Construction Joints: In the high lift grouting method, intermediate horizontal construction joints are not permitted. Plan the work for one continuous pour of grout to the top of the wall in four foot layers or lifts in the same working day. Should a blow-out, equipment breakdown, or any other emergency occur, cease the grouting operation. An alternate procedure may be used with the approval of the Architect or Structural Engineer.
10. The section of wall to be grouted in any one pour is limited to a length in which successive lifts can be placed within one hour of the preceding lifts. Vertical control barriers shall be placed between pour sections in locations approved by the Architect or Structural Engineer.

3.6 POINTING AND CLEANING

A. Point holes or defective mortar joints upon completion of work; where necessary, cut out and re-point defective joints.
B. At end of work day, fiber-brush new surfaces to remove mortar splotches, clean with mild detergent or enzymes, and rinse with clean water.
C. Do not use acid solution to remove green stain or efflorescence resulting from salts; follow recommendations of manufacturer for removal of such stains.
D. Upon completion of work, remove from site surplus materials, rubbish, and debris resulting from this work.

3.7 FIELD QUALITY ASSURANCE

A. Special Inspection: The Owner shall employ an approved, qualified masonry inspector to perform masonry inspection per CBC 1701 and 1704. Acceptance by a State or Municipality having a program of examining and certifying masonry inspectors will be considered adequate qualifications. The masonry inspector shall provide inspection of masonry construction in accordance with CBC 1704.5 and perform the following duties:

1. Review plans and specifications and meet with the Contractor to discuss requirements before work commences.
2. Before masonry work commences, meet with the Contractor and the Architect in a joint meeting to review the requirements for surveillance and quality control of the masonry work.
3. Check brand and type of cement, lime (if used) and source of sand.
4. Inspect the foundation or slab to ascertain that it is clean and ready to receive units.
5. Check reinforcing steel dowels for straightness, proper alignment, spacing, size and length.
6. Observe manner in which units are laid up to ensure that joints are full of mortar and kept tight during work. Inspect cells to assure that fins will not interfere with grouting or foaming. Instruct masons to keep cells clean of mortar droppings and inspect to determine compliance.
7. Observe placing of grout continuously.
8. Perform or supervise performance of required sampling and field testing as specified.
9. Keep complete record of inspection of work. Report daily to the Owner's Representative the progress of the masonry inspection.

B. Mortar and Grout Testing: The Owner's Testing Agency shall take and test mortar and grout samples as follows:

1. Take test samples of mortar and grout on each of three consecutive working days at the start of the project.
2. Take test samples at intervals not exceeding one week for the remainder of the project.
3. Take additional test samples whenever a change in materials or job conditions occurs.
4. Tests shall verify that the mortar and grout comply with their respective specified compressive strengths.

C. Prism Test: At the contractor's option, masonry prism testing may be performed in lieu of mortar and grout testing as follows:

1. The Owner's Testing Agency will perform prism testing in accordance with CBC section 2105.2.2.2. Prior to construction, a set of 5 masonry prisms shall be built and tested using materials taken from those specified for this project. During construction test 3 prisms for each 5,000 sq. ft. of wall area and as additionally required by the Architect.

END OF SECTION

SECTION 05 12 00 - STRUCTURAL STEEL

PART 1 - GENERAL

1.1 GENERAL

A. Work of this Section shall conform to requirements of Drawings and general provisions of the Contract, including General and Supplementary Conditions and Division 1 Specification sections.

1.2 SCOPE

A. The work covered by this Section shall include all labor, material, equipment, permits, engineering and other services necessary for the fabrication and installation of structural steel and related work, complete, in accordance with the drawings and as specified herein.

1.3 RELATED WORK SPECIFIED IN OTHER SECTIONS

A.	Submittals	Division 1
B.	Quality Control	Division 1
C.	Concrete	Section 03 30 00
D.	Miscellaneous Metals	Division 5
E.	Fireproofing	Division 7
F.	Painting	Division 9
~~F.~~G.	Sustainable Design Requirements	Division 1

1.4 CODES AND STANDARDS

A. Building Code: Structural steel work shall conform to the requirements of the Building Code identified on the Structural General Notes, and OSHA requirements, except where more stringent conditions or criteria occur in the standards referenced below and on the drawings.

B. Standards:

1. American Institute of Steel Construction (ANSI/AISC 360) "Specification for Structural Steel Buildings" per Structural General Notes.
2. American Institute of Steel Construction (AISC 303-05), "Code of Standard Practice", March 18, 2005, shall apply except:

   a. The last sentence of the last paragraph of item 3.1.2 shall be revised from "…for approval." to read "…for review; the Contractor's Engineer shall be professionally responsible for connections they design."
   b. Item 3.6 shall be deleted.
   c. Item 4.4 shall be deleted, and replaced with the requirements of the project specification.
   d. The second paragraph of 7.10.3 shall be revised from "… Owner's Designated Representative for Design and Construction" to "Owner's Designated Representative for Construction or as indicated in the Contract Documents"
   e. The last sentence of items 8.5.2 and 8.5.4 shall be deleted.
   f. Item 8.5.3 shall be deleted. Where a conflict exists between the Code of Standard Practice and the Contract Documents, the Contract Documents shall govern.

3. American Welding Society, AWS D1.1-08, "Structural Welding Code".
4. Research Council on Structural Connections (RCSC) - "Specification for Structural Joints Using ASTM A325 or A490 Bolts", (June 30, 2004).

5. American Society for Testing and Materials "ASTM Standards in Building Codes", various standards as referenced herein, latest edition.
6. The Society for Protective Coatings (formerly Steel Structures Painting Council, “SSPC”) "Steel Structures Painting Manual", (2005).

C. Definitions:

1. The term “Contract Documents” in this specification is defined as the design drawings and the specifications.
2. The term “SER” in this specification is defined as the Structural Engineer of Record for the structure in its final condition.
3. The term “Design Professionals” in this specification is defined as the Owner’s Architect and SER.
4. The term “Contractor” in this specification is defined to include any of the following: General Contractor and their sub-contractors, Construction Manager, Structural Steel Fabricator or Structural Steel Erector.
5. The term “Heavy Shapes” in this specification is defined to include hot rolled steel shapes with flanges exceeding 2 inches (50mm) in thickness and built up cross sections with plates exceeding 2 inches (50mm) in total thickness.
6. The term “High Restraint Weld” describes welds in which there is almost no freedom of movement for members joined due to geometry or material thickness.
7. The term “Testing Agency” in this specification is defined as an independent testing and inspection service engaged by the Owner for quality assurance observation and testing of steel construction in accordance with applicable building code provisions and any additional activities listed in the Contract Documents.
8. The terms “for record” and “submit for record” in this specification are defined as Contractor submittals that do not require a response from the Design Professionals.
9. Working Days: Monday through Friday, except for federal or state holidays.

1.5 STRUCTURAL STEEL CONTRACTOR QUALIFICATIONS

A. The term Structural Steel Contractor refers to any or all of the following parties, regardless of their contractual relationships: Structural Steel Fabricator, Structural Steel Detailer, Structural Steel Erector and Contractor’s Engineer.
B. Qualification Data: Submit qualification data (personnel and firm resumes, and project lists with references) for the Structural Steel Fabricator (“Fabricator”), Structural Steel Detailer (“Detailer”), Contractor’s Engineer(s) and Structural Steel Erector (“Erector”).
C. The Fabricator shall have 10 years of comparable experience in installations of this type and shall employ labor and supervisory personnel familiar with the type of installation, experienced in fabrication and erection of structural steel for projects of similar size and complexity. At the time of bid the Fabricator shall be AISC certified to the Standard for Steel Building Structures (STD) and must submit proof of these qualifications. The Fabricator’s qualifications shall be subject to review by the Design Professionals and Owner.
D. The Detailer shall have 10 years experience preparing detailed steel shop drawings and CNC downloads for structures of this type and complexity. The detailer’s qualifications shall be subject to review by the Design Professionals and Owner. All detailing shall be performed with 3D modeling software, such as TEKLA STRUCTURES, SDS-II or equivalent. Model shall be maintained to be current throughout the construction and in a form useable by the Design Professionals.
E. The Contractor’s Engineer(s) shall be qualified to perform the type of work required by the project. The Engineer(s) shall be a Licensed Professional Engineer(s) in the State of Californ**ia**. The Contractor’s Engineer(s) shall have 10 years of experience being in responsible charge of work of this nature. The proposed Engineer(s) shall be subject to approval of Design Professionals and Owner.

F. The Erector shall have 10 years of successful experience erecting structural steel for structures of this type and complexity in the region of the project. At the time of bid the Erector shall be an AISC Certified Steel Erector (CSE) and must submit documentation of this qualification. The Erector shall be an AISC Advanced Certified Steel Erector (ACSE) and must submit documentation of this qualification.

G. Welding: Qualify the welding procedures, shop welders, field welders, welding operators and tackers in accordance with AWS D1.1 and for the following periods of effectiveness of certification:

1. Certification and qualification, including period of effectiveness of welding personnel shall be as specified by AWS D1.1. Certification shall remain in effect for duration of work provided welders are continuously engaged in performing the type of welding for which they are certified, unless welders fail to perform acceptable welding, as determined by the Owner's Testing Agency. Certification and re-certification of welding personnel is subject to verification by the Testing Agency. Re-testing for re-certification will be the Contractor's responsibility.

1.6 SUBMITTALS

A. Required Submittals - Where the SUBMITTALS section of this specification is in conflict with Division 1 Submittals, the more stringent requirements for the Contractor apply. Required submittal items are listed here; see below for detailed requirements. Do not submit items not requested.

1) Submittal Schedule
2) Calculations, Shop Drawings and Erection Drawings
3) Submittal Letters
4) Pre-construction Survey
5) Quality Control Program
6) Product Data
7) Samples
8) Welding Procedures Specification (WPS)
9) Welder Certifications
10) Mill Reports
11) As-built surveys.

2. Calculations, Shop Drawings and Erection Drawings (including Field Work drawings): Submit required connection calculations, shop drawings and erection drawings for all structural steel indicated on the Contract Documents.

a. Material shall not be fabricated or delivered before the shop and erection drawings have been approved or approved as noted by the Design Professionals and returned to the Contractor.
b. Connection design calculations: Calculations are required for all details that are not indicated on the drawings as "Completely Designed." Each calculation package shall be signed and sealed by the Contractor's Engineer.
c. Structural Steel Shop Drawings: Submitted shop drawings shall include layouts and details for each member showing the steel type and grade, size, connections, cuts, copes, holes, bolts, welds, surface treatments (cleaning, shop paint, etc.) and provisions for the connection of other work. Steel type, grade and size for all attached elements shall also be shown.
d. Shop and erection drawings shall contain complete dimensional and geometric information, based on established dimensions shown on contract documents, and shall not be scaled from contract documents. The shop drawings shall clearly distinguish between shop and field welds and bolts, identify pre-tensioned high strength bolts and identify surface preparation requirements at slip critical connections.

e. Welds: All welds shall be indicated by standard welding symbols in the "Standard Code for Arc and Gas Welding in Building Construction" or as accepted by the SER. Shop and erection drawings shall show the size, length, and type of each weld, including the electrode type to be used.
f. Bolts: Details for bolt assemblies shall indicate bolt size, length, type and the presence, type and location of washers where required as part of the assembly; distinguish between N and X bolts, distinguish between slip-critical and bearing bolts; and distinguish between shop and field bolts. Also, indicate bolt orientation where required by the Contract Documents.
g. Erection Drawings: The erection drawings shall include plans showing exact locations of base and bearing plates, and/or anchor rods and other embedded items. All field connections not specifically shown on shop drawings shall be shown on erection drawings, including field bolt size, type, number, location and any special installation requirements, and field weld size, type, length and location.

3. Preconstruction Survey: Submit for record. Where interface with existing construction occurs, before related shop drawings are prepared survey the existing construction and submit the survey prepared by a professional surveyor employed by the Contractor to the Design Professionals. For all steel construction, before steel erection commences, perform and submit to the Design Professionals a complete survey for position and alignment at all points where construction by other trades will support steel elements, including but not limited to pockets, embedded plates, anchor rods and base plates. Include plan location positions relative to the building gridlines, and elevations of bearing surfaces and tops of bolts relative to building Datum elevation.
4. Quality Control Program: Submit for record complete details of the Contractor's quality control program including the names of the personnel responsible for this work.
5. Product Data: Submit manufacturers' specifications, test reports and applicable standards for all products listed under Part 2: Products. Standard literature shall be edited to suit job conditions.
6. Samples: Submit (2) samples each, (2) of shop painted products and (2) of field touch-up painted products.
7. Welding Procedures: Submit for record written welding procedures for all AWS D1.1 prequalified joints, and qualification procedures for all joints not prequalified by Section 3 of AWS D1.1. Submit written welding procedures developed by Contractor’s welding consultant for heavy shapes and High Restraint Welds described in this specification. Use the forms in AWS D1.1, Annex E. Submit all welding and qualification procedures to the Owner's Testing Agency for approval before submitting to the Design Professionals.
8. Welder Certification: Submit for record certification that the welders have passed qualification tests [acceptable to the governing authority] using AWS procedures.

   a. A certification shall be submitted in standard AWS format.
   b. Each certification shall state that the welder has been doing satisfactory welding of the required type within the six-month period prior to the subject work.

9. For any welder whose period of certification effectiveness has lapsed or whose workmanship is subject to question in the opinion of the Design Professionals or Testing Agency, immediate testing for recertification will be required. Tests, when required, shall be conducted at the sole expense of the Contractor.
10. Mill Reports: Submit for record certified copies of all mill reports, two (2) to the Design Professionals and one (1) to the Testing Agency, covering the chemical and physical properties of all structural steel and accessories (as defined in this specification) for

the project. Where required on the Contract Documents or by the AISC Code, reports shall include results of Charpy V-notch tests.

a. Such certificates shall be obtained from the mills producing the steel and shall certify in a cover letter submitted with the certificates, that the steel meets the minimum requirements as to physical properties, inspection, marking and tests for structural steel as defined by the current edition of the relevant ASTM Standard Specifications. Any steel that does not meet the ASTM requirements must be clearly identified in a cover letter submitted with the certificates.
b. Prior to commencing steel erection, the contractor shall deliver certificates to the Owner in number and form as may be required by the local Building Department or other local and State agencies having jurisdiction.

11. As-Built Surveys: Execute and submit for record a comprehensive survey of steel structure at each level adequate to assess if the structure has been built within the tolerances specified in the Contract Documents. Each certified survey, performed by a professional surveyor employed by the Contractor, shall be submitted to the Contractor's Engineer for their approval before proceeding to the next stage of erection. If deviations from the tolerances are discovered, the Contractor shall present corrective measures to the Design Professionals within 48 hours of completion of that stage of erection. Upon completion of steel erection, submit the complete package of steel surveys for record to the Design Professionals and the Owner.

B. Submittal Process

1. Submittal of shop and erection drawings and other submittals by the Contractor shall constitute Contractor's representation that the Contractor has verified all quantities, dimensions, specified performance criteria, installation requirements, materials, catalog numbers and similar data with respect thereto and reviewed or coordinated each drawing with other drawings and other trades. The Contractor shall place their shop drawing stamp on all submittals confirming the above.
2. Connection design calculations: Calculations are required for all details that are not indicated on the drawings as "Completely Designed." The Contractor shall submit connection design calculations prior to submitting shop drawings related to those calculations. The shop drawings shall incorporate all comments provided on the calculations.
3. Shop and erection drawings: Submit in complete packages so that individual parts and the assembled unit may be reviewed together. This Specification Section and the applicable drawings used in the development of the shop and erection drawings shall be referenced on each shop and erection drawing to facilitate checking. Unless the piece marks are self indexing, furnish index sheets with the shop drawings, relating piece marks for all beam, girder and column details to the sheet numbers on which they are located.
4. If the Contractor and Design Team agree to process shop drawings electronically, Contractor shall submit one hardcopy and one electronic copy to the SER. The naming convention of each drawing must follow the submittal numbering system and include the submittal #, specification #, revision # and drawing # in the prefix of the drawing name.
5. All modifications or revisions to submittals, shop drawings, and erection drawings must be clouded, with an appropriate revision number clearly indicated. The following shall automatically be considered cause for rejection of the modification or revision whether or not the drawing has been approved by the Design Professionals:

a. Failure to specifically cloud modifications
b. Failure to submit calculations for the modifications
c. Unapproved revisions to previous submittals

d. Unapproved departure from Contract Documents

6. The Contractor shall deliver to the Design Professionals at the completion of the job 2 electronic versions of the final as-built shop drawings on a CD-ROM or other media acceptable to the Design Professionals.
7. Resubmittals: Completely address previous comments prior to resubmitting a drawing. Resubmit only those drawings that require resubmittal.
8. Resubmittals Compensation**:** The Contractor shall compensate the Design Professionals for submittals that must be reviewed more than twice due to contractors' errors. The Contractor shall compensate the Design Professionals at the standard billing rates plus out-of-pocket expenses incurred at cost + 10%.

C. SER Submittal Review

1. The review of connection design and the review and approval of shop and erection drawings and other submittals by the Design Professionals shall be for general conformance with the design intent of the work and with the information given in the Contract Documents only and will not in any way relieve the Contractor or the Contractor's Engineer from:

   a. Responsibility for the adequacy of the design of the connections designed by the Contractor's Engineer.
   b. Responsibility for all required detailing.
   c. Responsibility for the proper fitting of construction work in strict conformance with the contract requirements.
   d. The necessity of furnishing material and workmanship required by contract drawings and specifications which may not be indicated on the shop and erection drawings.
   e. Conforming to the Contract Documents.
   f. Coordination with other trades.
   g. Control or charge of construction means, methods, techniques, sequences or procedures, for safety precautions and programs in connection with the work.

2. TYPE 1 Stamp - For shop drawings for building elements designed by the SER, the responses on the shop drawing review stamp used by the SER require the following actions:

   a. APPROVED indicates that the SER has found that the information presented on the shop or erection drawing appears to conform to the requirements of the Contract Documents. Fabrication, manufacture or construction of the elements of work shown in the shop drawing may proceed, provided that work is in compliance with the Contract Documents.
   b. APPROVED AS NOTED indicates that the SER requires the shop or erection drawing to be corrected to reflect the notes and comments shown. Fabrication, manufacture or construction of the elements of work shown in the shop drawing may proceed, provided that work is in compliance with the notations shown on the shop drawings and the Contract Documents. Promptly resubmit the corrected shop or erection drawing for record.
   c. REVISE and RESUBMIT indicates that the SER requires resubmission of the shop or erection drawing after correction per notes and comments. None of the elements of work shown on the shop drawing shall be fabricated, manufactured or constructed until the Contractor has received a returned shop drawing marked Approved or Approved as Noted.
   d. NOT APPROVED indicates that the shop or erection drawing does not conform to the Contract Documents and must be extensively revised before re-submittal. None of the elements of work shown on the shop drawing shall be

fabricated, manufactured or constructed until the Contractor has received a returned shop drawing marked Approved or Approved as Noted.

3. TYPE 2 Stamp - For submittals for building elements which are not designed by the SER but are performance specified, for items that do not form part of the completed structural system but impose loads on the structure, and for construction items or activities which have an effect on the final structure, a second stamp will be used. The responses on the stamp used by the SER require the following actions:

   a. NO EXCEPTIONS indicates that the SER has found that the information presented on the submittal appears to conform to the requirements of the Contract Documents. Fabrication, manufacture or construction of the elements of work shown in the shop drawing may proceed, provided that work is in compliance with the Contract Documents.
   b. EXCEPTIONS NOTED indicates that the SER requires the submittal be corrected to reflect the notes and comments shown. Fabrication, manufacture or construction of the elements of work shown in the shop drawing may proceed, provided that work is in compliance with the notations shown on the shop drawings and the Contract Documents. Promptly resubmit the corrected document for record.
   c. REJECTED indicates that the SER requires resubmission of the submittal after correction per notes and comments. None of the elements of work shown on the shop drawing shall be fabricated, manufactured or constructed. Contractor to revise and resubmit until SER response of No Exceptions or Exceptions Noted is received.

D. Substitution Request

1. Requests for any departure from Contract Documents must be submitted in writing by the Contractor and accepted in writing by the Design Professionals, prior to receipt of submittals.
2. All substitutions must be requested using the structural substitution request form included at the end of this section. Acceptance using the structural substitution request form indicates acceptability of the structural concept only. Contractor must submit shop drawings reflecting accepted substitutions for review in accordance with this Specification. The structural substitution request form, even if accepted, does not constitute a change order.
3. Such substitutions or modifications, if acceptable to the Design Professionals shall be coordinated and incorporated in the work at the sole expense of the Contractor.
4. The acceptance by the Design Professionals of a specific and isolated request by the contractor to deviate from these requirements does not constitute a waiving of that requirement for other elements of, or locations in the project, unless specifically addressed as such and permitted by the Design Professionals in writing.
5. Compensation for Additional Services: Should additional work by Design Professionals such as design, drafting, meetings and/or visits be required which are necessitated for the review and/or incorporation of the Contractor-requested substitution, including indirect effects on other portions of the work, the Contractor is responsible for paying for additional work performed by the Design Professionals at the standard billing rates plus out-of-pocket expenses incurred at cost + 10%. Additional costs for testing and inspection by the Owner shall also be compensated by the Contractor.
6. Contractor is responsible for means and methods and any impacts on other portions of the work that may arise from this substitution.

E. Request for Information (RFI)

1. RFI shall originate with the Contractor. RFI submitted by entities other than that Contractor will be returned with no response.
2. Limit RFI to one subject.
3. Submit RFI immediately upon discovery of the need for interpretation or clarification of the Contract Documents. Submit RFI within timeframe so as not to delay the Construction Schedule while allowing the full response time described below.
4. The response time for answering an RFI depends on the category in which it is assigned.

   a. Upon receipt by the SER, each RFI will be assigned to one of the following categories:

      1) No cost clarification
      2) Shown in Contract Documents
      3) Change to be issued in future bulletin
      4) Previously answered
      5) Information needs to be provided by others.
      6) Request for corrective field work
      7) Request for substitution

   b. RFIs in categories 1, 2, 3, 4 and 5 will be turned around by the SER in the number of days referenced in Division 1.
   c. RFIs in categories 6 and 7 will be rejected and must be submitted as submittals or requests for substitution.

F. LEED certification data as specified in Division 1, Section 01 81 13, "Sustainable Design Requirements", for the following LEED credits:

1. Credit MR 4.1 & 4.2, Recycled Content
2. Credit MR 5.1 & 5.2, Regional Materials, Manufactured and Harvested / Extracted Locally
~~5.~~3. Credit EQ 4.2, Low Emitting Materials, Paints

1.7 TEMPORARY SUPPORT OF STRUCTURAL STEEL FRAME

A. The structure as shown on the Contract Documents is designed to withstand the design loads only when all structural elements are installed and fully connected. The contractor shall be responsible for the analysis of all components and assemblies for stresses and displacements that may be imposed by fabrication, shipping, handling, erection, temporary conditions, construction loads, etc. The analysis of such shall be performed by the Contractor's Engineer.

1.8 STORAGE AND DELIVERY

A. Delivery: Unload all structural steel promptly upon arrival and store in an area designated and approved by the Owner at the site of the work. The Contractor shall be responsible for any charges from failure to unload material promptly.
B. Storage: Store structural steel to drain properly. Provide weep holes and clean out as required to keep steel free from water. Provide adequate protection and shoring to prevent distortion and other damage. Store structural steel on timber; do not lay on mud, directly on ground or cinders, or otherwise handle in a manner that damages finishes. Stored sections shall be readily accessible for inspection.
C. Store fasteners in a protected place.
D. Welding materials to be in moisture resistant, undamaged package. Maintain packages effectively sealed until electrode is required for use. Storage and handling shall be per AWS D1.1.

1.9 DESIGN OF CONNECTIONS

A. The contractor is responsible to design all connections not completely designed on the Contract Documents. A Completely Designed connection is only one that is specifically designated as such by the statement “COMPLETELY DESIGNED” on the Contract Documents. All connections not indicated as “COMPLETELY DESIGNED” shall be designed for the forces and/or connection design criteria called for in the Contract Documents.
B. Connection concepts shown on the drawings that are not “COMPLETELY DESIGNED” show only the minimum requirements to convey design intent.
C. All connections and details shown on shop and erection drawings shall be prepared under the supervision of the Contractor's Engineer, in accordance with AISC "Load and Resistance Factor Design Specification for Structural Steel Buildings."
D. The contractor shall design and provide any stiffener plates, doubler plates, reinforcing plates, etc. and their connections that may be required to develop and/or transfer the forces and/or connection design criteria called for in the Contract Documents.
E. Design connections to withstand the combined effects of shears, axial forces, moments and torques and as required by applicable code(s) and the contract documents.
F. All forces shown on the drawings are to be assumed reversible unless noted otherwise and must be checked for both directions. If no transfer/pass-through forces are shown on the Contract Documents, the most critical combinations of member forces and directions shall be assumed for the connection design.
G. Use types of shop and field connections shown on Contract Documents or, in absence of such indication, propose appropriate type for Design Professionals review.
H. Welding of High Restraint Welds: Use double bevels in lieu of single bevels where practical. Detail joints to allow for weld shrinkage. In cases of plates in more than one plane, show welding operation sequence on the drawings. In general, start welding at the most restrained part of the weldment and proceed to the least restrained.
I. All welded connection must utilize pre-qualified joints or joints that have been qualified by AWS D1.1, section 2.
J. Comply with all connection notes on drawings in conjunction with these specifications.
K. The connection design calculation submittals shall meet the following criteria:

1. Number each calculation in a logical and orderly system. Once submitted for review, calculations shall not be renumbered. Resubmitted calculations shall be indicated by using the same number with an “R” suffix. All changes must be clouded.
2. Provide sketches for results of each calculation, with all pertinent dimensions relating to the calculations (including pitch, gage, edge distance, unbraced lengths, Whitmore lengths, etc.) clearly shown. Geometry must be shown accurately and to scale. Provide enough sketches to clearly document the full range of geometric conditions applicable to each connection design calculation proposed.
3. For repetitive connections provide a spreadsheet or computer program summary table for each specific location, and a standard calculation which shows how the spreadsheet or program calculation applies.
4. Provide drawings showing the overall locations of the connections that are keyed/referenced to each connection calculation.
5. Calculations shall be typed, or performed by spreadsheet, or by computer program, or by other method approved by the SER. All spreadsheet calculations shall show the input and results for every calculation step and include appropriate text and sketches explaining all calculation assumptions.
6. Provide calculation checks for all forces shown on the drawings. All AISC code requirements apply. Provide calculations for each check. “OK by inspection” is not permitted.

1.10 STRUCTURAL STEEL PRE-ERECTION CONFERENCE:

A. At least twenty (20) working days prior to the commencing of steel erection the Contractor shall hold a meeting to review the detailed requirements of the steel erection.

B. The Contractor shall prepare an agenda and require responsible representatives of every party who is concerned with the steel erection to attend the conference, including but not limited to the following:

1. General Contractor/Construction Manager
2. Steel Erector / Steel Fabricator
3. Erector's Surveyor
4. Roof Deck Contractor
5. All Testing and Inspection Agencies
6. Design Professionals
7. Owner
8. Precast or Cladding Contractor as appropriate.

C. Minutes of the meeting shall be recorded, typed and distributed by the Contractor to all parties listed above within 5 working days of the meeting.

D. The minutes shall include a detailed outline of the erection procedure including a schedule of milestone dates for surveys and sign-offs on erection stages which represents an agreement reached by all parties involved. It shall also include the surveying program and submission schedule for approval.

E. Notwithstanding any provision of the Specification, the SER shall not be responsible for and not have charge over any safety programs or precautions at the site of the Project.

1.11 QUALITY ASSURANCE BY OWNER'S TESTING AGENCY

A. Quality assurance is testing and inspection to assist the Owner in evaluating the Contractor's performance in the fabrication shop and field. It is not a substitute for the testing and inspection which is required as part of the Contractor's quality control program (see the following section on quality control).

B. Cost: Except as specifically noted otherwise, the testing agencies for quality assurance shall be engaged and paid by the Owner.

C. The Owner has negotiated inspection services based upon the assumption that all fabrication work shall be performed at one single fabrication shop. Costs associated with work being performed in additional shops will require reimbursement to the Owner.

D. Coordination with Owner's Testing Agency: The Contractor shall have sole responsibility for coordinating their work with the testing agency to assure that all test and inspection procedures required by the Contract Documents and Public Agencies are provided. The Contractor shall cooperate fully with the Owners testing agencies in the performance of their work and shall provide the following:

1. Information as to time and place of starting shop fabrication and a field construction and erection schedule, one week prior to the beginning of the work
2. Site File: At least one copy of each approved shop drawing shall be kept available in the contractor's field office and the drawings not bearing evidence of approval and release for construction by the Design Professionals shall not be kept on the job. Provide drawings for the work to be performed in the shop or field one week prior to the start of work.
3. Representative sample pieces requested by the inspection agency for testing, if necessary
4. Full and ample means of assistance for testing and inspection of material
5. Proper facilities, including scaffolding, temporary work platforms, safety equipment etc., for inspection of the work in shop and field

E. Duties of the Owner's Testing Agencies:

1. Reports: The Testing Agency shall prepare daily reports of the structural steel work including progress and description/area of work, tests made and results. Reports of inspection of welding shall include deficiencies noted and corrections made, and other items pertinent to acceptance or rejection of the work. The reports shall state whether specimens comply with or deviate from contract requirements. The daily reports shall be collected and delivered to the Design Professionals and Owner weekly.
2. Rejection: The Owner's Testing Agency has the right to reject any material, at any time, when it is determined that the material or workmanship does not conform to the Contract Documents. The Testing Agency shall report deficiencies to Owner, Design Professionals, and Contractor immediately.
3. Structural steel work and general testing requirements: The Testing Agency shall perform the following shop and field inspections in addition to any other inspections enumerated above or specified on the Contract Documents:

    a. Shop inspection of steel shall include alignment and straightness of members, camber, preparation for connections, dimensional checks, testing of shop bolts, witnessing of welding procedures, testing of cuts, weld access holes and copes of heavy shapes as defined in this specification, examination and testing of completed welds, headed studs and deformed bar anchors, cutting of heavy shapes, finishing of column ends, cleaning, painting and storage of material. All shop fabrication shall be inspected in the shop. Camber shall be verified in a minimum of 10% of all members requiring camber. If, in the opinion of the SER and Testing Agency this testing discloses a large ratio (10% or more) of unacceptable cambers, the required percentage of tested cambers may be increased by the SER to 100% at no expense to the Owner.
    b. Field inspection of steel shall include connections, proper tensioning of bolts, levelness, plumbness and alignment of the frame, conformance to AWS welding methods, examination of surface before welding, examination and testing of completed welds, headed studs and deformed bar anchors and field painting, including touch-up.
    c. Check qualifications of the following:

        1) Shop welding procedures and personnel
        2) Shop stud welding setup and operators
        3) Shop bolting procedure and crew

    d. Where testing is required for less than 100% of locations, select test locations at random and throughout the project.
    e. Review mill certifications for compliance with the Contract Documents.

4. High Strength Bolting: The Testing Agency inspector shall inspect high strength bolted construction in accordance with RCSC "Specification for Structural Joints using ASTM A 325 or A 490 Bolts," including but not limited to:

    a. Surface preparation and bolt type conforms to plans and specifications prior to start of bolting operations.
    b. Proper bolt storage and handling procedures per codes and standards referenced by this specification are being followed.
    c. Visually inspect all bolted connections.
    d. For all bolted connections that are indicated as snug tight, connections are properly compacted and brought to the snug tight condition progressing outward from the most rigid part.
    e. For all bolted connections that are indicated as pre-tensioned or slip critical, pre-installation verification testing is performed by the inspector in cooperation with the contractor in accordance with RCSC section 9.2 and section 7.

f. For all bolted connections that are indicated as pre-tensioned or slip critical, through routine observation, as defined in RCSC 9.2.1, 9.2.3 or 9.2.4, that the pre-tensioning methods of RCSC 8.2.1, 8.2.3, or 8.2.4, as appropriate, are performed.

1) "Routine observation" is defined as observation of 10 bolts for every 100 bolts with a minimum of 2 bolts per connection.

g. Retest bolted connections that fail initial inspection after correction by the Fabricator or Erector.

5. Welding:

a. Review of submittals: Welding procedures including prequalification, qualifications test and, for heavy shapes and high restraint welds, the welding procedure prepared by the Contractor's Engineer or Welding Consultant.
b. Full penetration welds: Test all full penetration welds for soundness by means of either radiographic or ultrasonic testing in accordance with AWS D1.1 and ASTM E164 procedures. All flaws in plate or flange material revealed during such tests shall be repaired by the Contractor at the Contractor's expense.
c. Partial penetration welds: Test all partial penetration welds for soundness by means of visual and magnetic particle inspection, unless other methods are specified in the Contract Documents. All flaws in plate or flange material revealed during such tests shall be repaired by the Contractor at the Contractor's expense.
d. Testing of welds at heavy shapes and high restraint welds shall be performed not less than 48 hours after the weld has been completed.
e. Fillet welds: Visually inspect all fillet welds. In addition test ten percent (10%) of all fillet welds per connection using a non-destructive method, such as dye penetrant or magnetic particle. Select test locations randomly throughout the structure. If, in the opinion of the SER and Testing Agency this testing discloses a large ratio (10% or more) of unacceptable welds, the required percentage of tested welds may be increased by the SER to 100%, all at the Contractor's expense.
f. Inspection and Testing by the Testing Agency of high restraint welds and where Heavy Shapes are to be joined by partial or full penetration welds in tension:

1) Joint Preparation: Monitor fit up and joint preparation (bevel angle, etc.) for conformance to the submitted welding procedures including preheat and interpass temperature. Monitor base metal temperature during welding operations.
2) Test Full Penetration Welds in accordance to the requirements of this specification section, ultrasonically in accordance with AWS D1.1 procedures. On T or corner joints, pay careful attention to the heat affected zone and base metal where the weld shrinkage stresses are in the through thickness direction.
3)
4) Test Partial Penetration Butt Joints in accordance with this specification section by the magnetic particle method. At T or corner joints, in addition to the magnetic particle testing, ultrasonically scan the heat affected zone and adjacent base metal from face "C" per AWS D1.1 Table 6.7 and Annex K-7 to detect lamellar tears and shall be done with a compression wave. The Testing Agency shall submit a testing procedure that includes evaluation (acceptance criterion) procedures to the Design Professionals for review.

g. At heavy shapes and high restraint welds: provide pre-production sample testing of heat treatment, observe fabrication, welding and heat treatment of the samples for conformance with submitted welding procedures. Establish locations of testing coupons following AWS procedures. Test coupons following AWS procedures to verify satisfactory results using the welding procedure and heat treatment.

6. Headed Studs and Deformed Bar Anchors: Visually inspect all headed studs and deformed bar anchors for complete fusion and full 360-degree weld flash (or fillet).

   a. Check all studs with incomplete fusion, and at random five studs at each of six beams per floor, by bending to an angle of 15 degrees from its original axis (away from any missing flash). If more than twenty percent of studs fail on one member, check all studs on member. In addition for each member with any defective studs, test an additional member.
   b. Contractor to replace any studs that crack or break. Contractor to only straighten studs that would foul other work or have less than 1 inch (25mm) cover in bent position.

7. Cleaning & Painting:

   a. Prior to shop painting, examine all fabricated pieces to verify proper cleaning in accordance with this specification.
   b. Examine all shop painting to verify conformance with this specification.
   c. Examine loading and unloading of steel to visually observe that damage does not occur during shipping and handling.

8. Remedial Work: The Testing Agency shall indicate to the Contractor where remedial work must be performed and will maintain a current list of work not in compliance with the Contract Documents. This list shall be submitted to the Design Professionals and Owner on a weekly basis.
9. Certification: When all work has been approved by the Testing Agency, the Testing Agency shall certify in a letter to the Design Professionals and Owner that the installation is in accordance with the design and specification requirements (including applicable codes).

1.12 QUALITY CONTROL BY CONTRACTOR

A. The Contractor shall provide a program of quality control to ensure that the minimum standards specified herein are attained.
B. The Contractor shall immediately report to the Design Professionals any deficiencies in the work which are departures from the Contract Documents which may occur during construction. The Contractor shall propose corrective actions and their recommendations in writing and submit them for review by the Design Professionals. After proposed corrective action is accepted by the Design Professionals and Owner, the Contractor shall correct the deficiency at no cost to the Owner.
C. The Owner's general review during construction and activities of the Owner' Testing Agency are undertaken to inform the Owner of performance by the Contractor but shall in no way replace or augment the Contractor's quality control program or relieve the Contractor of total responsibility for quality control.

1.13 OBSERVATIONS AND CORRECTIONS BY DESIGN PROFESSIONALS

A. Review: The Design Professionals will observe the construction for general compliance with the provisions of the Contract Documents during various phases of construction.
B. Compensation for Additional Services: Should additional work by Design Professionals such as design, drafting, meetings and/or visits be required which are necessitated by

failure of the Contractor to perform the work in accordance with the Contract Documents, the Contractor is responsible for paying for additional work performed by the Design Professionals at their standard firm-wide billing rates plus out-of-pocket expenses incurred at cost + 10%. Additional costs for testing and inspection by the Owner shall also be compensated by the Contractor.

1.14 PERMITS AND WARRANTY:

1. Permits: The Contractor shall apply for, procure, renew, maintain, and pay for all permits required by City, State, or other governing authorities, necessary to execute work under this Contract. Contractor shall furnish copies of all permits to the Owner and Design Professionals.
2. Warranty: Upon completion of all work to be performed under this Contract, the Contractor shall execute and deliver in a satisfactory form a warranty that all workmanship and materials used in the performance of this Contract shall remain free from defects for a period of one (1) year from the date of execution of the Warranty.
3. ~~LEED Requirements~~
4. ~~See Division 1 Section "LEED Requirements" for additional LEED requirements.~~
5. ~~LEED Submittals~~
6. ~~Credit MR 4.1, 4.2 - Recycled Content:~~
7. ~~Indicate recycled content; indicate percentage of pre-consumer and post-consumer recycled content per unit of product.~~
8. ~~Indicate relative dollar value of recycled content product to total dollar value of product included in project.~~
9. ~~Credit MR 5.1, 5.2 - Local/Regional Materials:~~
10. ~~Manufacturing (fabrication) location(s): Indicate location of manufacturing (fabrication) facility; indicate distance between manufacturing facility and the project site.~~
11. ~~Product Value: Indicate dollar value of product containing local/regional materials; include materials cost only.~~
12. ~~Product Component(s) Value: Where product components are sourced or manufactured in separate locations, provide location information for each component. Indicate the percentage by weight of each component per unit of product.~~
13. ~~Credit EQ 4.2: VOC~~
14.2. ~~Submit Product Data and material safety data sheets stating compliance with VOC limits for field applied primers and paints. Refer to Section 01352/LEED Requirements for additional requirements.~~

PART 2 - PRODUCTS

2.1 STRUCTURAL STEEL

A. Structural steel shall conform to the requirements listed on the Structural General Notes.
B. "Heavy Shapes" as defined in this specification require minimum Charpy impact values per the Structural General Notes, in addition to any other members stated in the Notes.

2.2 SHOP COATINGS

A. Standard Primer: SSPC – Paint 25 or Paint 25 BCS, Type II zinc oxide raw linseed oil and alkyd primer. Color to be determined by Architect. Primer shall be compatible with, and from the same manufacturer as, top coats specified in Division 9 specification.
B. Zinc Rich Primer: SSPC-Paint 20, Type I or Type II, Zinc rich primer utilizing either an organic or inorganic binder with a minimum zinc content of 80 percent by weight in the dry film. The primer shall provide a surface meeting AISC Slip Critical Class B (slip coefficient

=0.50 min) requirements. Color to be determined by Architect. Primer shall be compatible with, and from the same manufacturer as, top coats specified in Division 9 specification.

C. Hot Dip Galvanizing: ASTM A123, weight of coating shall average not less than 2.3 oz per square foot (0.70 kg/ m²), with no individual thickness less than 2.0 oz per square foot (0.61 kg/m²).

D. Galvanizing Repair Paint: ZRC Cold Galvanizing Compound, or other complying with SSPC-Paint 20.

2.3 ACCESSORIES

A. High Strength Bolts: Conform to the provisions of the Research Council on Structural Connections (RCSC) "Specifications for Structural Joints using ASTM A325 or A490 Bolts" except that nuts shall be ASTM A563 Grades DH or DH3 (hardened) for both A325 and A490 bolts. Twist off type bolts (Tension Control bolts) shall additionally conform to ASTM F1852 or ASTM F2280.

B. All bolts shall be new, and not re-used.

C. Where A325 galvanized bolts nuts and washers are required, they shall be in accordance with ASTM A153, Class C. Where A588 steel is used, bolts, nuts and washers shall be Type 3.

D. Direct Tension Indicators: Meet requirements of ASTM F959.

E. Anchor Rods: Per structural General Notes.

F. Washers:

1. Round washers shall conform to American Standard B 27.2 type b
2. Washers in contact with high-strength bolt heads and nuts shall be hardened in accordance with ASTM Standard F436.
3. Beveled washers shall be square, smooth and sloped so that contact surfaces of the bolt head and nut are parallel.
4. The diameter of the hole of square beveled washers shall be 1/16 inch (1.5mm) greater than the bolt size for bolts smaller than one inch (25mm), and shall be 1/8 inch (3.0mm) greater than the bolt size for bolts larger than one inch (25mm).
5. Comply with requirements of RCSC for all washers including thickness, size and hardness, depending on connection details.

G. Welding Electrodes: Electrodes shall be low hydrogen and shall be selected from Table 4.1.1 of AWS D1.1. Comply with CVN requirements of the Structural General Notes.

1. Shielded Metal-Arc Welding: Welding electrodes for manual shielded metal-arc welding shall conform to the specification for Mild Steel Covered Arc-Welding Electrodes, AWS A5.1 E70 or 80, or the specification for Low-Alloy Steel Covered Arc-Welding Electrode, AWS A5.5.
2. Submerged-Arc Welding: Bare electrodes and granular flux used in submerged-arc welding shall conform to F70 or F80 AWS flux classifications of the specification for Gare Mild Steel Electrodes and Fluxes for submerged-arc Welding, AWS A5.17.
3. Where Charpy V-Notch values are required on the base metal, an electrode meeting the Charpy V-Notch requirements listed in the Structural General Notes shall be provided.

H. Headed Studs (shear connectors) shall be per Structural General Notes.

I. Deformed Bar Anchors shall be as specified in Structural General Notes.

J. Steel Castings shall conform to ASTM A27, Grade 65-35, medium strength carbon steel.

K. Grout: Refer to General Notes.

~~L.~~ Post-installed Anchors shall be per Structural General Notes.

~~2.3 LEED REQUIREMENTS~~

~~N. Structural Steel: LEED Credit MR 5.1, 5.2: Fabrication facility should be within 500 miles (800km) of project site.~~
~~O. Structural Steel: LEED Credit MR 4.1, 4.2: Recycled content: Minimum 50 percent post-consumer recycled content~~
~~P. Bolts: LEED Credit MR 4.1, 4.2: Recycled content: Minimum 50 percent post-consumer recycled content.~~
~~Q. Anchor Rods: LEED Credit MR 4.1, 4.2: Recycled content: Minimum 25 percent post-consumer recycled content.~~
~~R.~~L. ~~Headed Studs (shear connectors): LEED Credit MR 4.1, 4.2: Recycled content: Minimum 50 percent post-consumer recycled content.~~

PART 3 - EXECUTION

3.1 PREPARATION

A. Work by Others: Examine all work prepared by others to receive work of this Section and report any defects affecting installation to Design Professionals. Commencement of work will be construed as complete acceptance of preparatory work by others. The Contractor alone shall be responsible for checking the dimensions and coordination of the structural steel work with other trades.
B. Anchor Rods: At least 20 working days prior to the start of the structural steel erection, the Contractor shall ascertain by accurate survey the existing location, alignment, and elevation of the anchor rods embedded in the concrete by others. The Contractor shall immediately bring to the attention of the Design Professionals any discrepancies observed between the Contract Documents and the as-built conditions. Steel erection shall not start until corrective measures, if required, have been performed.

3.2 FABRICATION

A. Fabricate and assemble structural steel in the shop to the greatest extent possible.
B. Tolerances:
   1. Conform to the tolerances of the AISC "Code of Standard Practice," compensate for the difference between the temperature at time of fabrication and the mean temperature in service.
   2. Elevator shafts used for temporary hoists shall conform to the detailed requirements of the hoist manufacturer.
   3. Conform to the tolerances of the AISC "Code of Standard Practice", Section 10 (AESS) for architecturally exposed structural steel as indicated as “AESS” on the drawings.

C. Holes: Holes shall be provided in members to permit connections to the work of other trades or contracts, and for passage through the member of work of other trades. All holes shall be accurately drilled or punched at right angles to the surface of the metal in accordance with AISC Specifications. Holes shall not be made or enlarged by burning. Burning or drifting unfair holes will not be permitted. Holes that must be enlarged shall be reamed. Drift pins will be allowed only to bring together the several parts for connection. Holes in base plates shall be drilled. Holes shall be clean-cut without torn or ragged edges. Outside burrs resulting from drilling operations shall be removed with a suitable tool.
D. Camber: Provide camber as indicated on the Contract Documents. Where no camber is indicated, provide natural camber up.
E. Cutting: Manual gas-cutting in the shop may be used only if automatic or semi-automatic methods are not possible. If manual shop cutting is required, it shall be done only with a mechanically guided torch, except that an unguided torch may be used where the cut is

more than 1/2 inch (12mm) from the finished dimension and final removal is completed by means such as chipping or grinding to produce a gouge-free surface of quality equal to that of the base metal. At restrained joints and as indicated elsewhere, weld access holes shall be ground smooth.

F. Cutting of Heavy Shapes: Where “Heavy Shapes” as defined in this specification are to be joined by partial or full penetration welds in tension, preheating shall be required for all thermal cutting operations. Preheat shall be sufficient to prevent cracking but in no case less than 150 degrees F (65°C). Weld access holes and copes shall be ground to a smooth radius after cutting and tested for cracks by the magnetic particle method. All cut edges shall be free of sharp notches and gouges.

G. Anchor Rods: Rigid steel templates and anchor rods shall be furnished, labeled and shipped in sets indicating sizes and locations of columns, together with instructions for setting of anchor rods. Plate washers per Typical Details shall be provided.

H. Bolting: Bolts shall be driven accurately into the holes without damaging the threads. Bolt heads shall be protected from damage during driving. Bolt heads and nuts shall rest squarely against the metal. Where bolts are to be used on beveled surfaces having slopes greater than 1 in 20 with a plane normal to the bolt axis, beveled washers shall be provided to give full bearing under the head or nut.

I. Bolts indicated as “finger tight” on the Contract Documents shall be prevented from backing off by using lock nuts, thread compound or deformed threads.

J. Installation of High Strength Bolts:

1. Except where "snug tight" installation is specifically permitted on design drawings, all high strength bolts shall be installed with full pretension using Turn-of-Nut Pretensioning, Twist-Off Type Tension Control Bolt Pretensioning or Direct-Tension-Indicator (DTI) Pretensioning in accordance with the "Specification for Structural Joints Using ASTM A325 or A490 Bolts". Calibrated Wrench Pretensioning shall only be used where specifically approved by the SER.
2. Comply with special washer requirements of the RCSC, such as those related to slotted and oversize holes, and tapered flanges. DTI "washers" shall not be substituted for such required washers.
3. All high strength bolt assemblies (including Tension Control bolts and DTI’s) used in pretensioned connections shall be verified in accordance with the Pre-Installation Verification section of the RCSC.
4. Clean and re-lubricate bolts and nuts that become dry or rusty before use, except Tension Control bolts must be re-lubricated by manufacturer.

K. Welding of Structural Steel:

1. Pre-Weld Inspection: The surface to be welded and the filler material to be used shall be subject to inspection before welding is performed.
2. Welds indicated on the Contract Documents or the approved shop or erection drawings shall be created by electric arc welding processes that comply in all respects with the codes and specifications herein noted covering the design, fabrication, and inspection of welded structures and the qualifications of welders and supervisors. Control the heat input, weld length, weld sequence and cooling process to prevent distortion of the completed assembly.
3. Each welder’s work shall be traceable.
4. Special Requirements: For high restraint welds and welds at heavy shapes, follow approved welding procedures for weld process, sequence, pre-heating and cooling. Use stress relieving techniques where shown in the approved procedure developed by the Contractor’s Welding Consultant.

   a. Special Procedures: Prior to the start of production welding, the contractor shall demonstrate to the Testing Agency that preheat can be maintained without relying on heat from the arc. For field welding, the contractor shall

provide a shelter to protect each joint from inclement weather (rain, snow, etc.), from start until completion of the joint.

b. Preheat and Postheat: Preheat shall be sufficient to prevent cracking, but in no case less than required by AWS D1.1. For high-restraint welds, minimum preheat shall be 225 degrees F (105°C). The preheat shall be maintained throughout the thickness of the material for a distance equal to twice the material thickness on both sides of the joint at a minimum. Where different thicknesses of steel are being joined, the greater thickness shall govern. Preheat shall be measured on the face opposite the side of the heat application. Preheat shall be applied uniformly in a manner that does not harm the surface of the material nor cause surface temperatures to exceed 1100 degrees F (600°C). Should stress relief heat treatment be required, the contractor shall submit a written procedure.

c. Prior to heat treatment on a production weld, prepare and treat a test sample per the contractor's written procedure for tensile and Charpy V-notch tests in accordance with ASTM requirements.

5. Deficient Welds: Welds found deficient in dimensions but not in quality may be enlarged by additional welding. Any weld found deficient in quality shall be removed by grinding or melting and the weld shall be remade.

L. Bearing:

1. Bearing ends of columns shall be milled or sawn square perpendicular to axis of the column.
2. Finish bearing areas of base plates per AISC M2.8.

M. Stiffeners: Fitted stiffeners shall be ground to fit closely against flanges.

N. Cleaning and Preparation of Steel Surfaces:

1. Clean all steel work in accordance with the Steel Structures Painting Council (SSPC). Method specified herein that corresponds to its location and exposure. Steel work to be painted shall be painted within the same day that it is cleaned.

a. Interior, Not Exposed to View (above suspended ceilings, under sprayed-on fireproofing, steel to be encased in concrete): SSPC-SP-2, Hand Tool Cleaning.

b. Interior, Exposed in the Finished Building: SSPC-SP-6, Commercial Blast Cleaning, unless noted otherwise on the drawings.

c. Exterior (exposed to weather or in unconditioned space): SSPC-SP-6, Commercial Blast Cleaning, unless noted otherwise on the drawings.

d. Architecturally Exposed Structural Steel where indicated on the Contract Documents as “AESS”: SSPC-SP-10, Near White Blast. All mill marks and other marks such as pitting, rust and scale, seam marks, roller marks, and rolled trade names shall be removed by grinding, or welding and grinding, prior to blast cleaning.

e. Members to be Hot Dipped Galvanized: SSPC-SP3, Power Tool Cleaning, before galvanizing.

O. Shop Coating:

1. Where painting is specified, paint all steel work in accordance with the Steel Structures Painting Council (SSPC) Method specified herein that corresponds to its location and exposure and in accordance with manufacturer's written instructions. Paint steel work the same day that it is cleaned.

a. Interior, Not Exposed to View (above suspended ceilings, under sprayed-on fireproofing, steel to be encased in concrete): No Paint.

b. Interior, Exposed in the Finished Building: SSPC – Paint 25
c. Exterior (exposed to weather or in unconditioned space): SSPC – Paint 20
d. Architecturally Exposed Structural Steel (AESS) to receive a 2 or 3 coat paint system.

2. Protect finished bearing surfaces with a rust-inhibiting coating which is to be removed immediately prior to erection.
3. Do not paint:

a. Surfaces within six (6) inches (150mm) of field welds
b. Surfaces to be encased in concrete or to receive cementitious fireproofing
c. Contact surfaces of high-strength bolted Slip Critical connections (unless surface prep and paint has been specifically prequalified by the contractor or approved for use in this location by the SER)
d. Surfaces required for testing and preheat, until all testing and preheat has been performed
e. Finished bearing surfaces (use removable rust-inhibiting coating)
f. Top flange of the beam where steel deck or headed studs are to be attached

4. Paint shall be applied thoroughly and evenly to dry surfaces only when surface temperatures are above dew-point, in strict accordance with manufacturer's instructions.
5. Surfaces of exterior members which are inaccessible after assembly or erection shall receive their second coat of the approved paint, in a different shade, in the shop.
6. Hot-dip galvanize the following steel members:

a. All angles, steel plates and shims supporting exterior masonry or exposed to the weather, including shelf, arch and relieving angles
b. All connections between the above angles and steel plates and the supporting structural member, including clip angles and hardware
c. Any other steel members indicated as “Galvanized” on the Contract Documents.
d. All miscellaneous metal, angles, clips, etc. on exterior masonry walls.

3.3 ERECTION

A. Tolerances: Erect all work plumb, square and true to lines and levels in strict accordance with the structural requirements of the building within tolerances of the AISC Code of Standard Practice, unless otherwise indicated on the Contract Documents. Compensate for the difference between the temperature at time of erection and the mean temperature in service.
B. Bracing: Brace the frame during erection in accordance with the Contractor’s erection procedure.
C. Errors: Immediately report to the Design Professionals any errors in shop fabrication, deformations resulting from handling and transportation, and improper erection that affects the assembly and fitting of parts. Prepare details for corrective work and obtain approval of the method of correction. Approved corrections shall be made expeditiously at the sole expense of the Contractor.
D. Column Base Plates: Support and align on steel shims or setting bolts. After the supported members have been plumbed and properly positioned, tighten anchor rod nuts in preparation for grouting. Cut off wedges and shims flush with edges of plates and leave in place. The use of leveling plates will not be permitted.
E. Grouting: Refer to General Notes. Grout base plates immediately after the first tier of columns are plumbed. Do not proceed with steel erection above the first tier until base plates are grouted.
F. Bolting and Welding of Structural Steel: See Section on "Fabrication".

G. Bearing Surface: Clean bearing surfaces and surfaces that will be in permanent contact before the members are assembled.

H. Splices: Splices will be permitted only where indicated on the contract drawings or the reviewed shop drawings. Fasten splices of compression members only after surfaces are cleaned and abutting surfaces have been brought completely into contact. Fill any remaining gaps with steel shims driven into place and cut flush. Tack weld shims to each other and to members. Use runoff tabs at bevel weld splices. Cut off runoff tabs and ground smooth after weld completion.

I. Driftpins: Driftpins may be used only to bring together the several parts, and shall not be used in such a manner as to distort or damage the metal. Correct poor matching of holes by drilling to the next larger size and using a larger size bolt. Plug welding and redrilling will not be permitted, unless a specific instance arises and is approved by the SER.

J. Erection bolts: On exposed welded construction, remove erection bolts, fill holes with plug welds and grind smooth at exposed surfaces. On non-exposed welded construction, remove erection bolts.

K. Hammering: Hammering which may damage or distort the members will not be permitted.

L. Do not use cutting torches in the field without the specific approval of the SER for each application. Where cutting torch use is permitted, all the requirements of the Section on "Fabrication" shall apply.

M. Additional Material and Labor: If the Contractor furnishes additional material and labor for the purpose of erection or if the erection method requires that material be added to certain members, the required modifications shall be at the sole expense of the Contractor.

N. Alignment: Following erection, accurately align, level, and adjust all members prior to final fastening. Conform to AISC standard tolerances unless otherwise noted in the Contract Documents.

O. Touch-Up and Field Applied Paint: After erection, clean all damaged areas in the shop coat, exposed surfaces of bolts, bolt heads, nuts and washers and all field welds and unpainted areas adjacent to field welds according to manufacturers recommendations and paint with the same paint used for the shop coat. Match the touch up and field applied paint color to the as-built paint color. After touch up, at exterior (exposed to the weather or in unconditioned space) steel members apply a full coat of the specified paint in a different shade than the shop applied coat.

P. After erection, clean all damaged galvanized areas, welds and areas adjacent to welds and paint with the specified galvanizing repair paint.

Q. Clean all steel members of mud and debris and construction residue prior to erection.

R. Headed Studs and Deformed Bar Anchors

1. End weld headed studs and deformed bar anchors with an automatic process in accordance with section 7 of AWS D1.1.
2. Areas to which studs are to be attached must be free of foreign material, such as rust, oil, grease, paint etc. When mill scale is sufficiently thick to cause difficulty in obtaining proper welds, remove by grinding or sand blasting.

~~0.~~ Remove ceramic ferrules from studs and work after welding.

~~0. [LEED Requirements~~

~~0. Fabrication facility should be within 500 miles (800km) of project site.~~

~~0.~~3. ~~Shop Coating Product: must meet VOC requirements of LEED Credit EQ 4.2. See Section 01352/LEED Requirements for additional requirements~~.

[balance of page blank; see form on next page]

Structural Substitution Request Form – to be completed by Contractor

Project:		
Date:		Substitution Request #
Requesting Contractor:		Pages Attached (including this form)

1. Description of Requested Substitution:

2. Related Drawings and Specification Sections:

3. Rationale or Benefit Anticipated:

4. Effect on Construction Schedule[1] (check one): ☐ NONE ☐ See Attached

5. Effect on Owner's Cost[2] attach data (check one): ☐ CREDIT TO OWNER ☐ EXTRA

6. Effect on Construction Documents[3] (design work anticipated): ☐ NONE ☐ See Attached

7. Requesting Contractor Agrees to Pay for Design Changes (check): ☐ YES ☐ NO ☐ NOT APPLICABLE

8. Effect on Other Trades[4]:

9. Effect of Substitution on Manufacturer's Warranty (check): ☐ NONE ☐ See Attachment

Signature[5]: Date:

Company:

General Contractor Signature[5]: Date:

Notes:

1. Contractor is responsible for means and methods and any problems that may arise from making the requested substitution.
2. This is **NOT A CHANGE ORDER FORM**. A separate form is required to adjust costs and/or schedules.
3. Contractor is responsible for any design impacts that may arise from this substitution, including redesign efforts.
4. Contractor is responsible for effects on other trades from this substitution;
   General Contractor must review and agree effects on other trades are fairly represented in items 4-9.
5. Signature by a person having authority to legally bind his/her company to the above terms. Otherwise this request is void
6. All items in form must be completed for substitution request to be considered.

Request Review Responses (completed by Architect and/or Engineer(s)):

ACCEPTED	ACCEPTED AS NOTED	REJECTED	INSUFFICIENT DATA TO SUPPORT REQUEST	ENGINEER / ARCH / MEP SIGNATURE	DATE

Engineer/Architects Comments:

END OF SECTION

SECTION 05 40 00 - COLD-FORMED METAL FRAMING

PART 1 - GENERAL

1.1 DESCRIPTION

A. Section Includes: Provision of light gauge steel stud and joist framing. Work includes, but is not necessarily limited to the following:

1. Load-bearing steel stud framing at exterior walls.
2. Non-load bearing steel stud framing at exterior walls.
3. Interior stud wall and ceiling framing with studs.
4. Framing accessories.

B. Related Sections:

1. Structural Steel Framing: _____Section 05 12 00.
2. Metal Fabrications: _____Section 05 50 00.
3. Metal Framing Systems: _____Section 09 10 00.
4. Lath and Plaster: _____Section 09 22 00.
5. Gypsum Board Systems: _____Section 09 26 00.
6. Sustainable Design Requirements Division 1

1.2 REFERENCES

A. Requirements of the GENERAL CONDITIONS and DIVISION NO. 1 apply to all Work in this Section.

B. Published specifications, standards, tests, or recommended methods of trade, industry, or governmental organizations apply to Work of this Section where cited by abbreviations noted below (latest editions apply).

1. California Code of Regulations, Title 24, Part 2, also known as the California Building Code (CBC), 2010 Edition.
2. American Society for Testing and Materials (ASTM).
3. Federal Specifications (FS).
4. American Welding Society (AWS) D1.3: “Structural Welding Code - Sheet Steel.”
5. American Iron and Steel Institute (AISI): “Specifications for the Design of Cold-Formed Steel Structural Members.”
6. Steel Stud Manufacturer’s Association (SSMA).
7. Metal Lath Association (MLA): “Specifications for Metal Lath and Furring.”
8. Society of Protective Coatings (SSPC).

C. QUALITY ASSURANCE

1. Regulatory Requirements:

   a. Comply with fire-resistance ratings as indicated and as required by governing authorities and codes.
   b. Provide materials, accessories, and application procedures which have been listed by an approved testing agency or tested according to ASTM E119 for the type of construction shown.
   c. Comply with CBC Section 2203.3 and AISI requirements for design and identification of cold-formed steel.
   d. Framing shall conform to the ICC Report for stud gauge and spacing for all wall conditions.

2. Steel stud system shall conform to referenced AISI documents.

3. Installer: Company specializing in performing the work of this Section with minimum 3 years' documented experience.
4. Welders: Qualified in accordance with AWS D1.3 for welding process, position, type of weld and type of steel.

1.3 SUBMITTALS

A. Submit in accordance with provisions of Section 01 30 00, "Submittals."
B. Product Data: Manufacturer's ICC report, specifications and installation instructions for steel studs, fasteners, and accessories.
C. Experience of installer if requested by Architect.
D. LEED certification data as specified in Division 1, Section 01 81 13, "Sustainable Design Requirements", for the following LEED credits:

1. Credit MR 4.1 & 4.2, Recycled Content
2. Credit MR 5.1 & 5.2, Regional Materials, Manufactured and Harvested / Extracted Locally

1.4 PRODUCT DELIVERY, STORAGE AND HANDLING

A. Procedures: In accordance with Section 01 60 00, "Materials & Equipment."
B. Protect framing from rusting and damage.
C. Deliver in manufacturer's unopened containers or bundles fully identified with name, brand, type and grade.
D. Store inside a dry, ventilated space, and protect framing from rust and damage.

1.5 JOB CONDITIONS

A. Coordinate stud sizes and layouts with the work of the various trades. Where ductwork, conduit, piping, casework, and other such items exceed indicated available space, increase stud sizes or make other minor modifications as necessary to accommodate the work at no change in cost of the Work.

PART 2 - PRODUCTS

A. MANUFACTURERS

1. Acceptable Manufacturers: Any member of Steel Stud Manufacturer's Association (ICC ER-4943P).

B. MATERIALS

1. Sheet Steel: ASTM A653, A1008 or A1011.
2. Studs and tracks:

a. See drawings for size and gauge.
b. Galvanization per ASTM A653 with G60 minimum.

3. Cold-Rolled Furring Channels: As specified in Section 09 10 00, "Metal Support Systems."
4. Vertical Deflection Clips (non-load-bearing framing): Manufacturer's standard bypass and head clips as required, capable of isolating wall stud from upward and downward vertical displacement of primary structure using mechanical fasteners. Acceptable Manufacturer: The Steel Network, Inc. Connections must be tested in accordance with ICC AC261 criteria and hold a valid ICC ERS evaluation service report to be accepted, such as ICC ESR-1903, or equivalent. Provide clips with attached bushing and screw of the series, size and configuration as required by the structural design calculations.

a. VertiClip® or VertiTrack® series or equal to. Mechanical attachment to structure and screw attachment to stud web using step-bushings to permit frictionless vertical movement.

5. Drift Clips® (non-load-bearing framing): Manufacturer's standard bypass and head of wall clips (as required), capable of isolating wall stud from upward and downward vertical displacement and lateral drift of primary structure using mechanical fasteners. Acceptable Manufacturer: The Steel Network, Inc. Connections must be tested in accordance with ICC AC261 criteria and hold a valid ICC ERS evaluation service report to be accepted, such as ICC ESR-1903, or equivalent.

   a. DriftClip® series or equal to. Mechanical attachment to structure and screw attachment to stud web using step-bushings to permit frictionless vertical and lateral movement.

6. Sliptrack: as indicated on approved drawings. Acceptable Manufacturers: Sliptrack Systems (ICC ESR-2049) or engineer approved equal.
7. Partition Stiffeners or Bridging: Unpunched channel shape, formed of 16-gauge steel to required dimensions.
8. Welding Electrodes: AWS low hydrogen, rod number and diameter as approved by the Owner's Testing Agency.
9. Touch-up Primer for Galvanized Surfaces: SSPC Paint 20 zinc rich.
10. Metal Screws: Self-drilling and self-tapping. Screws shall penetrate substrate by a minimum of three full threads exposed. Use low profile heads as required by architectural finish.

    a. Sheet Metal Screw (SMS): No. 8 and larger as noted on Drawings.
    b. Heavy Gauge Screws: Size as noted on Drawings. Use "TEKS" screws by ITW Buildex (ICC ESR-1976) or equal product substituted per Section 01 63 00.
    c. Hex Head Screws: Size as noted on Drawings. Use "Kwik-Flex" screws by Hilti or equal product substituted per Section 01 63 00.

PART 3 - EXECUTION

3.1 PREPARATION

A. Coordinate details and requirements of other Work which adjoins or fastens to studs and requires backing or special support framing included in this Section.

   1. Items requiring backing or support include, but are not necessarily limited to casework, wall-specialties, and similar items.
   2. Obtain Architect's approval of backing method proposed to satisfy requirements of this Section which differs from methods noted or shown.

3.2 EXAMINATION

A. Examine all parts of the supporting structure and the conditions under which studs will be installed.
B. Notify the Architect, in writing, of any conditions detrimental to the proper and timely completion of the Work.
C. Do not proceed with the installation of steel studs until unsatisfactory conditions have been corrected.

3.3 INSTALLATION

A. Tracks shall be securely anchored to supporting structure, with fasteners specified at not more than 24-inches on center.
B. Complete, uniform, and level bearing support shall be provided for the bottom track at each bearing-stud location. Install full metal shims below bottom track at stud locations as needed, or set bottom track in high-strength grout.
C. Abutting or intersecting pieces or track shall be securely anchored to a common structural element or spliced together.

   1. Splices or butt welds shall be used at all butt joints in the runner track.
   2. Do not splice studs.

D. Wall studs shall sit in top and bottom track with 1/16” maximum gap between wall stud and track web.

   1. Studs shall be aligned or plumbed and securely fastened to the flanges of both top and bottom track.
   2. Space studs 16-inches on center maximum unless otherwise noted on Drawings.

E. Isolate non-load-bearing steel framing from building structure to prevent transfer of vertical loads while providing lateral support.

   1. Connect vertical (and/or drift) deflection clips to studs and anchor to primary building structure in accordance with manufacturer’s recommendations.

F. Framed wall openings shall include a header and multiple studs at each edge of opening as indicated on Drawings. Contractors option to built-up jambs, headers, and sills: JamStud® by The Steel Network, Inc. ASTM A653/A653M, Grade 50 (340) 50ksi (340MPa), minimum yield strength 65ksi (450MPa), minimum tensile strength, G-60 (Z180) hot-dipped galvanized coating.
G. Diagonal bracing shall be installed at locations indicated for frame stability.
H. Install bridging as indicated on Drawings.
I. Form corners and intersections of partitions with three studs as shown on Drawings. Provide additional studs as indicated or required.
J. Joining of members shall be made with welding; wire tying of framing members shall not be permitted.
K. Welded connections shall be made by resistance spot fusion welding, fillet welding, or plug welding and shall be done in accordance with the latest recommended procedures and practices of the American Welding Society.
L. Do not cut or notch stud flanges.
M. Where exposed to weather, field abrasions and welds shall be touched up with zinc rich primer.
N. Erection Tolerances: Install cold formed metal framing to a maximum allowable tolerance variation from plumb, level, and true to line of 1/8-inch in 10 feet as follows:

   1. Space individual framing members no more than plus or minus 1/8-inch from plan location. Cumulative error shall not exceed minimum fastening requirements of sheathing or other finishing materials.

O. Provide all angles, clips and other miscellaneous pieces necessary to attach light gauge framing to building structure or to attach other materials to light gauge framing.
P. Do not bridge building expansion and control joints with cold formed metal framing. Independently frame both sides of joints.

3.4 INSTALLATION OF FIRE-RATED ASSEMBLIES

A. Install studs which are components of fire-rated wall assemblies as indicated.

3.5 BACKING IN STUD PARTITIONS

A. Securely weld or screw cut sections of unpunched stud to at least three stud or furring supports, leaving flat surface of backing stud web to receive attachment of object to be secured.
B. Verify that any pre-drilling of backing and attachment of spacers to prevent crushing of collateral material is done prior to application of collateral material.
C. If it is determined by the Architect that backing was not provided for any items as required, the Contractor shall remove the finish material and install backing. The Contractor shall patch and refinish surface to match adjacent area and finish.

3.6 FIELD QUALITY CONTROL

A. The Owner's Testing Agency will:

1. Provide continuous inspection of welding, including prior fit-up, welding equipment, weld quality, and welder certification in accordance with AWS and CBC Section 1704.3.
2. Provide continuous inspection during installation as required to establish conformity of Work requirements.

END OF SECTION

SECTION 05 50 00 - METAL FABRICATIONS (ARCHITECTURAL)

PART 1 - GENERAL

1.1 SUMMARY

A. Section includes metal fabrications not classified as "structural steel", and not specified in other Sections. The work of this Section requires deferred approval; it is design/build.

B. Related requirements:

1. Division 01 for LEED requirements.
2. Division 03 for grouting and dry-packing other than required for the work of this Section, and concrete fill in guard posts.
3. Divisions 05 and 07 for all other railings.
4. Division 07 for expansion and seismic joint covers.
5. Division 08 for guides and clips for rolling door.
6. Division 09 for finish painting metal fabrications.

C. Work furnished but installed in Division 03: Cast metal nosings and skate stoppers.

1.2 SUSTAINABLE DESIGN REFERENCE

A. USG Green Building Council (USGBC).

1.3 ADMINISTRATIVE REQUIREMENTS

A. Engineering responsibilities: Design Build/Delegated Design.

1. The work of this Section requires deferred approval. It is not fully detailed on the Drawings, which indicate desired profile and design intent, and it has not been engineered.
2. The Contractor is responsible for engineering, fabrication and installation to withstand loads and other criteria prescribed by Code, indicated, or specified, within the physical limitations indicated on the Drawings.
3. A California-licensed professional engineer employed by the Contractor shall prepare drawings and calculations for this work; sealed and signed by the Contractor's design engineer.
4. Fasteners and connections where indicated are shown schematically.

   a. Fasteners or connections shall not conflict with or require revision of the finish profiles of the assemblies and the supporting work.
   b. Connections to the primary supports shall not impose eccentric loading, or induce twisting or warping.
   c. Connections to the primary supports shall be able to accommodate misalignment of the structure within limits allowed by the tolerances specified.

B. Scheduling and sequencing: Schedule installation so wall attachments are made only to completed walls. Do not support railings temporarily by any means that do not suit structural performance requirements.

1.4 SUBMITTALS

A. Data:

1. Specifications and installation instructions for manufactured items.
2. Manufacturer's literature, including engineering data for anchors.

B. Shop Drawings:

1. Large scale, dimensioned Shop Drawings of metal fabrications indicating in detail methods of fabrication and assembly, weight, materials, holes, lugs, inserts, finishes and other pertinent data.
2. For components to be embedded in concrete and masonry work, furnish templates supplemented by dimensioned Shop Drawings to trades placing those components in their work. Assist in location of these components where so requested by those trades.

C. Samples: The following Samples at least 6 inches long, unless otherwise specified.

1. Welded connection between the following components showing proposed weld quality and finish.

   a. Pipe to pipe (railing).
   b. Pipe to bar.
   ~~c.Tube to tube.~~
   ~~d.~~c. Tube and bar.

2. Stair nosing.
3. Ladder rung.
4. Grating, 12 inches square.
5. Skate stopper and wall railing brackets, full size, one only.
6. Mesh infill panel, 12 inches square.
7. Prefinished, Metal wall base.

D. Engineering calculations: Calculations signed and sealed by a California-licensed professional engineer, to demonstrate Code compliance for Contractor engineered assemblies, including railings and other load-bearing assemblies.

1. Calculations shall be legible and shall incorporate sufficient cross references to shop drawings to make calculations readily understandable and reviewable. Test reports are an acceptable substitute for calculations for the anchors only. Calculations shall include the following:

   a. Analysis of framing members.
   b. Analysis of anchors, including anchors embedded in concrete.
   c. Section property computations for framing members.
   d. Seal and signature of design engineer.

2. Only the loading of the structure at the connections will be reviewed.

E. LEED: LEED certification product data as specified in Section 01 81 13, “Sustainable Design Requirements”, for the following LEED credits:

1. Credit MR 4.1 & 4.2, Recycled Content.
2. Credit MR 5.1, Regional Materials, Manufactured Locally.
3. Credit MR 5.2, Regional Materials, Harvested / Extracted Locally.
4. Credit MR 6, Rapidly Renewable Materials.
5. Credit EQ 4.1, Low Emitting Materials, Adhesives & Sealants.
6. Credit EQ 4.1, Low Emitting Materials, Paints.

F. Closeout: Include the maintenance and operation instructions for the ladder extension in the Maintenance Manual.

1.5 QUALITY ASSURANCE

A. Qualifications for welding work:

1. Qualify welding procedures and welding operators in compliance with AWS "Qualification" requirements of AWS D1.1.
2. Examine that welders to be employed in this work have satisfactorily passed AWS qualification tests.
3. If recertification of welders is required, retesting shall be Contractor's responsibility.
4. Submit certificates of compliance to demonstrate compliance with the above requirement.
5. Costs for fabricator tests, inspections and quality control shall be borne by the Contractor.

B. Special inspections:

1. Except where otherwise specified, special inspections by City of Santa Monica's testing laboratory, prescribed by Code, will not be required where work is performed on the premises of a licensed fabricator, registered and approved by authorities having jurisdiction to perform such work without special inspection.
2. Submit certificates of compliance to demonstrate compliance with the above requirement.
3. Costs for fabricator tests, inspections and quality control shall be borne by the Contractor.

1.6 HANDLING

A. Store metal fabrications above ground, under cover. Protect from moisture and rust.

PART 2 - PRODUCTS

2.1 PERFORMANCE REQUIREMENTS

A. General:

1. Provide railings and other load-bearing assemblies capable of withstanding the loads prescribed by Code without exceeding the allowable design working stress of the materials involved, including anchors and connections, except use 100 psf minimum for gratings and ladder.
2. Apply each load to produce the maximum stress in each component.

B. Deflection: Limit deflection under uniform load to L/360; L/120 under concentrated load; or 1/4-inch maximum, whichever is more restrictive.

2.2 MATERIALS

A. Metal surfaces - general: For metal fabrications exposed to view upon completion of the Work, provide materials selected for their surface flatness, smoothness, and absence of surface blemishes. Do not use materials whose exposed surfaces exhibit pitting, seam marks, roller marks, rolled trade names, roughness, and, for steel sheet, variations in flatness exceeding those permitted by reference standards for stretcher-leveled sheet.
B. Steel plates, shapes, and bars: ASTM A 36.

C. Steel tubing:

1. Cold-formed steel tubing: ASTM A 500, Grade A or B, as required for design loading, unless otherwise indicated.
2. Hot-formed steel tubing: ASTM A 501. For exterior installations and where otherwise specified, provide tubing with hot-dip galvanized coating in compliance with ASTM A 53.
3. Handrails: One of the following.

   a. Welded and Drawn Over Mandrel (DOM), ASTM A 513, Type S.
   b. Cold Drawn Seamless (CDS), ASTM A 519.
   c. Hot Finished Seamless (HFS), ASTM A 519, machined to match the finish of the DOM steel above.
   d. Painted finish at common room, color to match metal panels.

4. Elsewhere: ASTM A 53; finish, type, and weight class as follows.

   a. Galvanized finish for exterior installations.
   b. Type S, Grade A, standard weight (schedule 40), unless another grade or weight or both required by design loading.
   c. Painted finish at community room, color to match metal panels.

D. Uncoated structural steel sheet: Product type (manufacturing method), quality, and grade, as follows.

1. Cold-rolled structural steel sheet: ASTM A 1008, Grade A, unless otherwise required by design loading.
2. Hot-rolled structural steel sheet: ASTM A 1011, Grade 30, unless otherwise required by design loading.

E. Uncoated steel sheet: Commercial quality, product type (method of manufacture) as follows.

1. Cold-rolled steel sheet: ASTM A 1008.
2. Rolled steel floor plate (Checkered): ASTM A 786, Pattern No. 1, 4 or 5. Use same pattern throughout the Project.
3. Hot-rolled steel sheet: ASTM A 1011.

F. Galvanized steel sheet:

1. Structural quality: ASTM A 653 SQ, Grade 33, G90 designation, unless another grade required for design loading.
2. Commercial quality: ASTM A 653 CQ, G90 coating designation.

G. Flanges and anchors: Cast or formed metal of the same type material and finish as supported rails, unless otherwise indicated.

H. Concrete inserts:

1. Threaded or wedge type galvanized ferrous castings, either malleable iron complying with ASTM A 47, or cast steel complying with ASTM A 27.
2. Provide bolts, washers, and shims as required, hot-dip galvanized in compliance with ASTM A 153.

I. Welding rods and bare electrodes: Select in accordance with AWS specifications for the metal alloy to be welded.

J. Fasteners: Provide zinc-coated fasteners for exterior use or where built into exterior walls, elsewhere fasteners may be uncoated. Select fasteners for the type, grade, and class required.

1. Bolts and nuts: Regular hexagon-head bolts, ASTM A 307, Grade A, Property Class 4.6; with hex nuts, ASTM A 563; and flat washers, unless otherwise indicated.
2. Anchor bolts: ASTM F 1554, Grade 36.
3. Machine screws: ASME B18.6.3ASME B18.6.7M.
4. Lag bolts: ASME B18.2.1.
5. Wood screws: Flat head, carbon steel, ASME B18.6.1.
6. Plain washers: Round, carbon steel, ASME B18.22.1.
7. Lock washers: Helical, spring type, carbon steel, ASME B18.21.1.
8. Drilled-in expansion anchors:

   a. Expansion anchors complying with FS FF-S-325, Group VIII (anchors, expansion, [non-drilling]), Type I (internally threaded tubular expansion anchor); and machine bolts complying with FS FF-B-575, Grade S, by Hilti, Inc., or ITW Ramset/Red Head.
   b. Select anchors with capability to sustain, without failure, a load equal to 6 times the load imposed when installed in masonry and equal to 4 times the load imposed when installed in concrete, as determined by testing per ASTM E 488.

9. Chemical anchors:

   a. Set by Simpson Strong-Tie Co., Inc. or HY-150 by Hilti, both used with machine bolts complying with FS FF-B-575, Grade S.
   b. Select drilled-in and chemical anchors to resist loads imposed thereon with a safety factor of 4 minimum for static loads, and 10 minimum for dynamic and overhead loads.

10. Lock washers: Helical spring type carbon steel, FS FF-W-84.

K. Grout: Pre-packaged, non-shrink, non-metallic grout, non-staining, nongaseous grout complying with ASTM C 1107.
L. Cement (expansive): Factory-prepared with accelerators quick-setting hydraulic cement complying with ASTM C 595.
M. Shop primer for ferrous metal:

1. For non-galvanized surfaces to be painted with high performance coatings: Organic, zinc-rich primer Tnemec “90-97 Tneme-Zinc,” or equal, applied at a 2.5 to 3.5 mils DFT, and meeting class B surface requirements for slip-critical connections.
2. For all other ferrous metal surfaces: Tnemec “10-99,” or “Unibond” (basis of design), or equal fast-curing, lead-free, universal modified alkyd primer selected for compatibility with finish paint systems specified in Section 09 90 00, and complying with performance requirements equal to or better than the basis of design.

N. Galvanizing repair (zinc-rich) paint: “94-H20 Hydro-Zinc” by Tnemec Co., or equal.
O. Bituminous paint: Cold-applied asphalt mastic complying with SSPC Paint 12 but containing no asbestos fibers, or cold-applied asphalt emulsion complying with ASTM D 1187.

2.3 MANUFACTURED UNITS

A. Abrasive stair nosings: Match existing at the Park~~Alumogrit Type 101SP aluminum nosing with integral anchoring lugs or studs by Wooster Products, Inc., or equal, consisting of a cast aluminum, abrasive nosing.~~

1. Abrasive nosings are required on every tread of exterior stairs~~, and top and bottom tread of every flight of interior stairs~~. Installation in concrete is specified in Section 03 30 00.

~~2.Furnish tread inserts 6-inch shorter than length of treads for cast-in-place concrete stairs, and full length for concrete-filled pan stairs.~~

B. Aluminum ladder: O'Keeffe's "Standard Duty Channel Rails Fixed Ladder" with "Safety Post" when terminating at a roof hatch, or equal by Precision Ladders, Inc.

C. Wall railing brackets:

1. Cast malleable iron bracket, sized for the pipe railing indicated, model 1701-2 by JG Braun Co., No. 253 by Builders Brass Works Corp., Style B by McNichols, or equal.
2. Provide cast steel spacer, to prevent crushing finish material, equivalent to Builders Brass Works Corp. Model No. 249.

D. Skate stoppers: ~~"Skate Stoppers Diamond 90-12" by Intellicept, or equal~~Match existing at the Park.

E. Safety post: Where ladder terminates at roof hatch, provide Bilco "LadderUp" safety post or "Hatch Access Safety Rail" by Precision Stair Corp., "Extend-A-Rail" by Precision Ladders, Ltd., or equal, complete with hardware and fasteners required for installation.

F. Metal bar grating at amphitheater seating: McNichols GCM-1-100, smooth, press-lock constructions with one-inch by 3/16-inch bearing bars, 7/16-inch o.c., and rectangular cross bars 4 inches o.c.

G. Mesh infill panels in exterior railings: X-Tend NEO Flexible stainless steel mesh, with 1.5 mm rope diameter.

H. Painted interior protective steel wall panels: Refer to the Drawings~~TBD~~.

I. Painted metal wall base: "Final Form series 953-830" by Gordon, Inc., with manufacturer's standard baked-on high performance powder coating.

J. Bollards: ~~Types TBD~~Refer to the Drawings.

2.4 FABRICATION - GENERAL

A. Comply with the reference standards and the following.

B. Engineer, fabricate and install exterior components to allow for expansion and contraction for a temperature range of 120-degree F, ambient, 180-degree F, material surfaces, without causing buckling, excessive opening of joints, and overstressing of welds and fasteners. Space expansion joints equally and symmetrically and show them on the Shop Drawings.

C. Drill holes for bolts and screws. For screws exposed to view in finished surfaces use FHCS type with screw slots filled and finished flush and smooth with adjacent surfaces.

D. Form exposed work true to line and level with accurate angles and surfaces, and straight, sharp edges, so assembling can be done without filler pieces.

E. Shear and punch metals cleanly and accurately. Remove burrs.

F. Remove sharp or rough areas on exposed surfaces. Projecting edges are not permitted. Ease exposed edges to a radius of approximately 1/32-inch.

G. Weld corners and seams continuously to comply with AWS recommendations and the following:

1. Do not use stitch, spot or tack welds on exposed surfaces.
2. For work exposed to view, provide weld quality and finish equal to NOMMA Finish #1. Elsewhere provide weld quality and finish equal to NOMMA Finish #4.
3. Use materials, methods and welding sequence that minimize distortion and develop strength and corrosion resistance of base metals.
4. Obtain fusion without undercut or overlap.
5. Remove welding flux immediately.
6. At exposed connections, undercut edges of components to be welded, weld and finish exposed welds and surfaces smooth and blended so that no roughness shows after finishing and contour of welded surface matches those adjacent.

7. Where welds will be exposed to the elements, weld connections between various pieces continuously to prevent water intrusion in the weld area, or seal welded parts, after weld is ground, with silicone sealant specified in Section 07 92 00.

H. Form bent metal corners to the smallest radius possible without causing grain separation or otherwise impairing the strength of the material.
I. Form exposed connections with flush, hairline joints, using concealed fasteners wherever possible. Cope intersections of rails and posts, weld joints, and grind smooth; butt weld end-to-end joints of railings or use welding connectors.
J. Bend pipe without collapsing or deforming its walls, to produce a smooth, uniform curved section and to maintain uniform sectional shape.
K. Fabricate joints that will be exposed to the weather with weep holes where water or condensation may accumulate.
L. Fabricate items to be galvanized in accordance with ASTM A 385. Limit use of vent and drain holes and locate where concealed from view in the finish work.
M. Cut, reinforce, drill, punch, thread and tap metal work as required to receive finish hardware and similar items of work.
N. Fabricate items in the largest Sections practical to minimize field jointing.
O. Provide supplementary parts necessary to complete each item of metal fabrication even though such parts may not be shown or specified. Provide all anchors, brackets, and sleeves for securing metal work to adjacent construction.
P. Remove blemishes by grinding before cleaning, treating, and applying specified finishes.

2.5 PIPE RAILING FABRICATION

A. General: Fabricate handrails and railings to comply with requirements indicated for design, dimensions, member sizes and spacing, details, finish, and anchorage, but not less than that required to support structural loads.
B. Assemble handrails and railings in the shop to greatest extent possible to minimize field splicing and assembly. Disassemble units only as necessary for shipping and handling limitations. Clearly mark units for reassembly and coordinated installation. Use connections that maintain structural value of joined pieces.
C. Form simple and compound curves by bending members in jigs to produce uniform curvature for each repetitive configuration required; maintain cylindrical cross section of member throughout entire bend without buckling, twisting, cracking, or otherwise deforming exposed surfaces of handrail and railing components.
D. Connect members by welding. Cope components at perpendicular and skew connections to provide close fit, or use fittings designed for this purpose when acceptable to the Design Consultant. Weld connections continuously to match approved samples.
E. Brackets, flanges, fittings, and anchors: Provide wall brackets, flanges, miscellaneous fittings, and anchors to connect handrail and railing members to other work, unless otherwise indicated.

1. Provide inserts and other anchorage devices for connecting handrails and railings to concrete or masonry work. Fabricate anchorage devices capable of withstanding loads imposed by handrails and railings. Coordinate anchorage devices with supporting structure.
2. For railing posts set in concrete, unless otherwise indicated, provide preset sleeves of steel not less than 6-inch long with inside dimensions not less than 1/2-inch greater than outside dimensions of post, and steel plate forming bottom closure.

F. Provide weep holes or another means to drain entrapped water in hollow sections of handrail and railing members that are exposed to exterior or to moisture from condensation or other sources.
G. Fabricate joints to be exposed to weather to be watertight.
H. Close exposed ends of handrail and railing members.

I. Provide wall returns at ends of wall-mounted handrails, unless otherwise indicated. Close ends of returns, unless clearance between end of railing and wall is 1/4-inch or less.
J. Provide fillers made from steel plate, or other suitably crush-resistant material, where needed to transfer wall bracket loads through wall finishes to structural supports. Size fillers to suit wall finish thicknesses and to produce adequate bearing area to prevent bracket rotation and overstressing of substrate.

2.6 CASTINGS FABRICATION

A. Make castings of uniform quality, well cleaned, free from blowholes, swells, cracks, porosity, hard spots, shrinkage distortion and other defects. In addition, castings shall be free of fins, burrs and slag.
~~B.~~Fabricate castings to the dimensions indicated with a tolerance of plus 1/8-inch~~, except that in the dimensions of covers and the openings to receive them, tolerance shall be limited to 1/16-inch.~~
~~C.~~B. ~~Machine horizontal bearing surfaces of covers subject to vehicular and pedestrian traffic with machined bearing on contact surfaces for other joints~~.

2.7 WELDING

A. Weld shop and field connections continuously in compliance with AWS D1.1, Structural Welding Code - Steel, and AWS D1.3, Structural Welding Code - Sheet Steel, unless bolted connections are specifically shown.
B. Grind welds that will remain exposed, smooth and flush to match and blend with parent metal surfaces. Match approved weld samples.

2.8 GALVANIZING

A. Follow procedures outlined in ASTM A 1430 to safeguard against and test for possible embrittlement. Unless fabricated from galvanized materials, hot-dip galvanize exterior ferrous metal items and items installed in exterior walls, which are totally or partially exposed to the weather, after their fabrication in compliance with ASTM A 123 or A 153, as applicable
B. Excessive dross, rough surfaces, blisters, lumpiness, runs, edge tears, spikes, and chromate quenching are unacceptable.
C. Safeguard assemblies against steel embrittlement in compliance with ASTM A 143, and against distortion in compliance with ASTM A 384.
D. Coating weight shall conform to Table 1 of ASTM A 123, or ASTM A 153, as applicable.
E. Plug vent holes with lead or silicone sealant after galvanizing.
F. If necessary to prevent humid storage staining, quench freshly galvanized steel in a passivating solution.

2.9 SAFETY POSTS (LADDER EXTENSION)

A. Attach to the ladder side rails in accordance with the post manufacturer's instructions.
B. Verify that posts lock securely in "up" position.
C. Adjust and lubricate for smooth operation.

2.10 FABRICATION TOLERANCES (EXCEPT FOR CASTINGS)

A. Squareness: 1/8-inch maximum difference in diagonal measurements.
B. Maximum offset between components at joints: 1/16-inch except that at welded joints no offset is allowed.
C. Maximum misalignment of adjacent members: 1/16-inch.
D. Maximum bow: 1/8-inch in 48 inches.
E. Maximum deviation from plane: 1/16-inch in 48 inches.

2.11 SHOP PRIMING

A. Apply a heavy coat of bituminous paint to metal surfaces that will be in contact with cementitious materials. Do not apply on exposed surfaces.
B. Shop prime all other metal assemblies as follows:

1. Prepare surfaces in accordance with the following:

a. SSPC SP3, Power Tool Cleaning for interior surfaces.
b. For galvanized surfaces, treat zinc coating for paint adhesion as recommended by the paint manufacturer, and apply primer over clean dry surfaces.

2. Remove loose mill scale, rust, cutting and punching burrs, oil, grease and other deleterious materials before priming.
3. Immediately after surface preparation, apply primer in compliance with the paint manufacturer's instructions to provide a uniform dry film thickness of not less than 1-1/2 mils per coat. Use painting methods that will result in full coverage of joints, corners, edges and all exposed surfaces.
4. Apply primer to completely cover all exposed surfaces as well as surfaces concealed after assembly. Stripe paint corners, crevices, bolts, welds, and sharp edges.
5. Allow paint to dry thoroughly before handling.
6. Apply one coat of primer to surfaces exposed in the finished work, and 2 coats to surfaces that will be inaccessible after their assembly or erection.

PART 3 - EXECUTION

3.1 EXAMINATION

A. Examine conditions and measurements affecting the work of this Section at site.
B. Correct detrimental conditions before proceeding with installation.

3.2 INSTALLATION

A. Fastening:

1. Provide anchorage devices and fasteners required for attaching metal fabrications to in-place construction, including threaded fasteners for concrete and masonry inserts, toggle bolts, through-bolts, lag bolts, wood screws and other connectors required.
2. Dry-pack metal fabrications supported on concrete and masonry as specified in Section 03 30 00 to provide firm, level bearing surfaces.

B. Cutting, fitting and placing:

1. Perform cutting, drilling and fitting required for installation of metal fabrications.
2. Set items accurately in their proper location, alignment and elevation, plumb, level, true and free of rack as measured from established lines and levels.

3. Provide temporary bracing or anchors for items to be built into concrete, masonry or similar construction.
4. Fit exposed connections accurately to form flush, hairline joints.
5. Weld connections that are not to be left as exposed joints, but cannot be shop welded because of shipping size limitations. Grind exposed joints smooth and flush with parent metal.

C. Field welding: Comply with AWS Code for procedures of manual shielded arc welding, appearance and quality of welds made, and methods used to correct faulty welds.
D. Prefabricated units: Install as specified, and in compliance with their manufacturer's instructions. Anchor securely to supports.
E. Safety posts:

1. Attach to the ladder side rails in accordance with the post manufacturer's instructions.
2. Verify that post locks securely in "up" position.
3. Adjust and lubricate for smooth operation.

F. Installation tolerances: Adjust metal fabrications for squareness, alignment, twist, levelness and plumbness to the following tolerances.

1. Squareness where applicable: Plus or minus 1/16 inch, measured on the diagonal.
2. Alignment: Plus or minus 1/16 inch where fabrications are separated by one inch or more; where components join or are separated by less than one inch, components shall be aligned; no deviations permitted.
3. Twist: Plus or minus 1/16 inch, except that deviation shall be such that joined panelized components are flush at joints; no deviations permitted.
4. Plumbness: Plus or minus 1/16 inch, except that deviation shall be such that joined panelized components are flush at joints; no deviations permitted.
5. Levelness: 1/8 inch from level, except where tighter tolerances are required for joining or alignment with adjacent work.
6. Deviation from theoretical location in plan: 1/4 inch, except where tighter tolerances are required for joining or alignment with adjacent work.

3.3 TOUCHUP

A. General: Immediately after erection, clean field welds, bolted connections and abraded areas, and proceed as follows.
B. Damaged primer: Clean the damaged area, sand smooth, re-clean and spot-prime with the same paint as that used for shop priming applied to a minimum thickness of 2 dry mils.
C. Damaged zinc coating:

1. Clean abraded area in accordance with SSPC-SP11, "Power Tool Cleaning" to bare metal all welds and damaged zinc coating. Extend cleaning 2 inches past damaged area.
2. Spot prime damaged area with Tnemec "94-H20 Hydro-Zinc" applied at 2.5 to 3.5 Mils D-FOOT

D. Where galvanized surface will remain exposed in the Work, repair damaged areas with zinc-based solder in accordance with ASTM A 780, regardless of the width of the abrasion (not limited to 3/16 inch).

3.4 DEMONSTRATION

A. Demonstrate operation of the ladder extension ot the Owner's designated representative.

END OF SECTION

SECTION 05 52 00 - STAINLESS STEEL RAILINGS

PART 1 - GENERAL

1.1 SUMMARY

A. Section includes exterior stainless steel handrails and railings. The work of this Section requires deferred approval; it is design/build.
B. Related requirements:

1. Division 01 for LEED requirements.
2. Division 05 and 07 for all other railings.

1.2 SUSTAINABLE DESIGN REFERENCE

A. USG Green Building Council (USGBC).

1.3 ADMINISTRATIVE REQUIREMENTS

A. Engineering responsibilities:

1. The work of this Section requires deferred approval and delegates design to the Contractor. It is not fully detailed on the Drawings, which indicate desired profile and design intent, and it has not been engineered.
2. The Contractor is responsible for engineering, fabrication and installation of the work of this Section to withstand loads and other criteria prescribed by Code, indicated, or specified, within the physical limitations indicated on the Drawings.
3. A California-licensed professional engineer employed by the Contractor shall prepare drawings and calculations for this work. Drawings and calculations, as specified above, shall be sealed and signed by the Contractor's design engineer.
4. Fasteners and connections where indicated are shown schematically.

   a. Fasteners or connections shall not conflict with or require revision of the finish profiles of the assemblies and the supporting work.
   b. Connections to the primary supports shall not impose eccentric loading, or induce twisting or warping.
   c. Connections to the primary supports shall be able to accommodate misalignment of the structure within limits allowed by the tolerances specified.

1.4 SUBMITTALS

A. Shop Drawings: Large scale, dimensioned Shop Drawings indicating in detail methods of fabrication and assembly, welds, weight, materials, holes, lugs, inserts, fasteners, finishes and other pertinent data.
B. Data: Manufacturer Product Data consisting of the following.

1. Specifications and installation instructions for railings.
2. Manufacturer's literature, including engineering data, for drilled-in anchors and shot pins.

C. Layout drawings:

1. Submit drawings for fasteners and anchors to be embedded in concrete showing type, location, setting-out dimensions and acceptable setting tolerances.
2. Provide complete floor plans, elevations (if required) and full size details of the embedded anchorage for review along with a fully coordinated set of structural calculations.
3. Details of each type of embedment shall be included in the submittal.
4. Draw details full size and annotate.

D. Calculations: As specified in Section 05 50 00.

E. LEED: LEED certification product data as specified in Section 01 81 13, “Sustainable Design Requirements”, for the following LEED credits:

1. Credit MR 4.1 & 4.2, Recycled Content.
2. Credit MR 5.1, Regional Materials, Manufactured Locally.
3. Credit MR 5.2, Regional Materials, Harvested / Extracted Locally.

F. Certified test results: Certified test results showing that railings have been tested by a recognized testing laboratory or agency and comply with specified performance characteristics; a rational analysis of the railings signed and sealed by the design engineer will be acceptable in lieu of test results.

~~E.~~G. Closeout: With closeout submittals furnish to the City the fabricator's recommendations for maintenance of the ~~ornamental metals surfaces~~railings.

1.5 QUALITY ASSURANCE

A. Fabricator qualifications:

1. Successfully engaged in the manufacture of ornamental metal work, similar to the work described in this Section and indicated on the Drawings, for a minimum of 5 years.
2. Fabricator qualifications are subject to Design Consultant's review and approval before subcontract is awarded.

B. Welding work qualifications:

1. Qualify welding procedures and welding operators in compliance with AWS "Qualification" requirements for AWS D1.1.
2. Verify that welders to be employed in this work have satisfactorily passed AWS qualification tests.
3. If recertification of welders is required, retesting will be Contractor's responsibility.

C. Mockup:

1. Erect at the Project site, unless otherwise acceptable to the Design Consultant, a mockup of one assembly for the Design Consultant's review and approval.
2. Make mockup complete with all accessories, features required for the final assemblies.
3. Mockup size and features: TBD.
4. Make modifications necessary to achieve mockup satisfactory to the Design Consultant, or remove and construct additional mockups.
5. Approved mockup shall serve as the standard for the same work on the building.

~~6.Remove mockups only after completion and acceptance of final work unless its~~ After approval mockup may be incorporated~~ion~~ in the Work provided it is protected~~is authorized by the Design Consultant.~~

~~7.~~6. ~~Protect mockups until its removal.~~

1.6 HANDLING

A. Protect fabrications with strippable coating or other forms of protection standard with the fabricator for exposed metal surfaces.

PART 2 - PRODUCTS

2.1 MATERIALS

A. General:

1. Select materials for their surface flatness, smoothness and freedom from blemishes wherever exposed to view in the finished work.
2. Materials shall have been cold-rolled, cold-finished, cold-drawn, extruded, stretcher-leveled and machine cut to the highest commercial standards for flatness, with edges and corners sharp and true to angle or curvature as required.
3. Exposed-to-view surfaces which exhibit pitting, seam marks, roller marks, oil-canning, stains, discolorations or other imperfections will not be acceptable and shall be removed from the job site.

B. Stainless steel:

1. Type: ASTM A 666, Type 302/304.
2. Sheet, strip, plate, and flat bar: ASTM A 666, Type 304.
3. Bar stock: ASTM A 276.
4. Tubing: ASTM A 269.

C. Welding electrodes and filler metal: Type and alloy recommended by producer of the metal to be welded, as required for color match, strength and compatibility in the fabricated items.
D. Fasteners: NAAMM Type 305 stainless steel.
E. Bituminous paint: Cold-applied asphalt mastic complying with SSPC Paint 12, except containing no asbestos fibers.

2.2 FABRICATION

A. Design components to allow for expansion and contraction for a temperature range of 120-degree F, ambient, 180-degree F, material surfaces, without causing buckling, excessive opening of joints, and overstressing of welds and fasteners. Space expansion joints equally and symmetrically and show them on the Shop Drawings.
B. Design assemblies to minimize site welding.
C. Form metal work to the required shapes.
D. Welding: Comply with AWS and the metal producer's recommendations.

1. Use welding for joining pieces together, unless otherwise accepted by the Design Consultant on shop drawings.
2. Welds shall be continuous, except where stitch and spot welding are specifically permitted.
3. Make welded joints light-proof and tight. Close welded joint to air and water infiltration by welding interface completely.
4. Use only technicians qualified to weld stainless steel using TIG equipment.
5. Maintain proper welding temperature to avoid discoloring adjacent metal components.
6. Clamp parts in jigs during welding to avoid distortion.

7. Undercut metal edges where welds will be ground flush and dressed smooth.
8. Grind welds exposed to view flush, and fill and dress to match adjacent parent metal surfaces so that joint will be invisible in the Work.
9. Welds on or behind surfaces that will be exposed to view shall be done so that finished surface will be free of imperfections such as pits, runs, splatter, cracks, warping, dimpling, depressions or other forms of distortion or discoloration.
10. Remove weld spatter and welding oxides from welded surfaces.

E. Cut components square. Remove burrs from cut edges. Mill joints to a tight, hairline, flush fit. Cope or miter corner joints.

F. Unless otherwise shown or accepted on the shop drawings, conceal fasteners in the finish work. Back-up joints with either sleeves or back-up plates.

G. Built-in work: Furnish anchor bolts, inserts, plates and other anchorage devices, and all other items for metalwork to be built into concrete, masonry, or work of other trades, with necessary templates and instructions to facilitate proper placing and installation.

2.3 FINISHING EXPOSED METAL SURFACES

A. Finish exposed stainless steel surfaces with a NAAMM No. 4 finish (180 grit) with the grain belting running parallel with the long dimension of the component being fabricated.

PART 3 - EXECUTION

3.1 EXAMINATION

A. Examine conditions and measurements affecting the work of this Section at site.

B. Correct detrimental conditions before proceeding with installation.

3.2 PREPARATION

A. Furnish Shop Drawings, templates and inserts for work to be embedded in work of other trades.

3.3 INSTALLATION

A. General:

1. Do not install components damaged or defective in any way. Remove and replace members damaged during installation or thereafter, before Final Acceptance.
2. Do not cut, trim or weld parts during erection, where it would damage the finish, decrease the strength, or result in a visual imperfection or a failure in performance of the work.
3. Return components which require alteration to the shop for refabrication, if possible, or for replacement by new parts.
4. Install work with tight joints accurately fitted and aligned.
5. Where cutting is required for proper fitting and jointing, restore finish to eliminate evidence of corrective work.
6. Joints at changes in direction in stainless steel railings shall be shop welded; field joints shall be a minimum of 2 feet from a change in direction, and assembled with concealed sleeves or back-up plates and set screws.
7. Install this work with concealed fasteners.

8. Apply a bituminous coating of approximately 30 mils DFT, or other suitable permanent separator, on surfaces of ~~dissimilar metals (except where exposed to view) and~~ metal ~~surfaces~~ in contact with cementitious materials. Where the metals are exposed to view, provide a plastic or neoprene separators between dissimilar metals.
9. Comply with AWS Code for manual shielded metal-arc welding procedures, the appearance and quality of welds made, and the methods used in correcting welding work which must be approved by the Design Consultant in each case.

B. Fastening to in-place construction:

1. Set this work accurately in location, alignment and elevation, plumb, level or sloped to follow ramped conditions, and true to line, measured from established lines and levels.
2. Provide required anchorage devices and fasteners for securing ornamental metals to in-place construction; coordinate the embedment of anchors with the work of Section 03 30 00.

3.4 TOUCHING-UP/CLEANING/PROTECTING

A. Field repair damaged components and finishes when the results are satisfactory to the Design Consultant, otherwise replace with undamaged new components.
B. Restore protective coverings damaged during shipment or installation. Remove protective coverings only when there is no possibility of damage from other work yet to be performed at the same location.
C. Clean and protect exposed surfaces at completion of this work and protect assemblies from damage and stains until final acceptance.

END OF SECTION

SECTION 06 10 00 - ROUGH CARPENTRY

PART 1 - GENERAL

1.1 SUMMARY

A. Section includes:

1. Wood framing and furring.
2. Wood grounds, nailers and blocking.
3. Plywood sheathing, subflooring and underlayment.
4. Rough hardware and fasteners.

B. Work furnished but installed in other Sections: Division 03 for anchor bolts.

C. Related requirements:

1. Division 01 for LEED requirements.
2. Other Section of Division 06 for architectural woodwork, for miscellaneous carpentry, and for finish carpentry and millwork.
3. ~~Division 26 for plywood backboards for electrical and telephone equipment.~~

1.2 DEFINITION

A. Exposed framing refers to dimension lumber not concealed by other construction and indicated to receive a stained or natural finish.

1.3 SUSTAINABLE DESIGN REFERENCE

A. USG Green Building Council (USGBC).

1.4 SUBMITTALS

A. Wood treatment data: Treatment manufacturer's instructions for proper use of each type of treated material.

B. Pressure treatment:

1. For each type specified, include certification by treating plant stating chemicals and process used, net amount of preservative retained and conformance with applicable standards.
2. For water-borne preservatives, include statement that moisture content of treated materials was reduced to a maximum of 19 percent prior to shipment to Project site.

C. LEED: LEED certification product data as specified in Section 01 81 13, "SUSTAINABLE DESIGN REQUIREMENTS", for the following LEED credits:

1. Credit MR 4.1 & 4.2, Recycled Content.
2. Credit MR 5.1, Regional Materials, Manufactured Locally.
3. Credit MR 5.2, Regional Materials, Harvested / Extracted Locally.
4. Credit MR 6, Rapidly Renewable Materials.
5. Credit MR 7, Certified Wood.
6. Credit EQ 4.1, Low Emitting Materials, Adhesives & Sealants.
7. Credit EQ 4.1, Low Emitting Materials, Paints.
8. Credit EQ 4.1, Low Emitting Materials, Composite Wood.

1.5 HANDLING

A. Procedure: In accordance with AWPA recommendations for storage and protection of pressure-treated wood.
B. Storage:

1. Do not store materials in wet or damp areas. Keep materials dry. Protect against exposure to weather and contact with damp or wet surfaces.
2. Stack lumber, plywood and other panels to provide for air circulation within and around stacks and under temporary coverings.
3. Protect plywood from moisture by covering with waterproof coverings until the plywood has been covered with a finish material, or the building has been completely enclosed.
4. Protect materials from damage during unloading and storage. Do not use damaged materials, or plywood panels with damaged corners, except after removing damaged portion.

PART 2 - PRODUCTS

2.1 FRAMING LUMBER

A. S4S grade-marked Douglas Fir/Larch, of the grades and sizes indicated on the Drawings, manufactured and graded according to WCLIB or WWPA rules.
B. Sizes indicated are nominal. Actual sizes shall conform to NIST PS 20.
C. Lumber up to 2-inch thick shall be seasoned to a moisture content of 19 percent or less and be stamped "S-Dry." Lumber over 2-inch thick can be shipped unseasoned and stamped "S-Green".

1. For exposed framing lumber provide material complying with the following requirements:
2. Grading:

a. Material hand-selected at factory from lumber that complies with "Appearance" grade requirements of ALSC National Grading Rule; issue inspection certificate of inspection agency for selected material.
b. Unless otherwise indicated, provide lumber of same species and grade as indicated for structural framing.

D. Grade-stamp: Provide lumber with each piece factory-marked with grade stamp of inspection agency evidencing compliance with grading rule requirements and identifying grading agency, grade, species, moisture content at time of surfacing, and mill.

1. For lumber that will remain exposed, furnish pieces with grade stamp applied to ends or back of each piece; or omit grade stamp entirely and provide certificates of grade compliance issued by inspection agency.

2.2 PLYWOOD SHEATHING

A. Structural plywood – roof and wall sheathing: APA grade-stamped Douglas Fir plywood of the grades indicated on the Drawings and complying with US Product Standard PS-1.
B. Plywood used as a substrate directly under PVC roofing: Minimum 1/4-inch thick, Exterior Grade, with a B or a C-plugged face under the roof membrane.
C. Do not use OSB.

2.3 ACCESSORIES

A. Builder's rough hardware: Verify that fasteners for pressure-treated wood will not corrode due to treatment materials used in the manufacture or present at time of use when in the presence of moisture. Use hot-dip galvanized or stainless steel fasteners where carpentry will remain exposed to the weather.

B. Fasteners:

1. General:

a. For pressure-treated wood, use hot-dip galvanized (not electro-plated) fasteners complying with G185 to attach pressure-treated wood.
b. Use hot-dip galvanized fasteners to attach exterior work.
c. In all cases use fasteners of size and type indicated, or if not indicated complying with Code. Use annular ring or screw nails for floor sheathing.
d. Nails to be used with framing accessories shall be those furnished by the manufacturer with the framing accessories.

2. Anchor bolts: ASTM A 307 or A 36, non-headed type, hot-dip galvanized when used in contact with pressure-treated lumber.

C. Metal framing accessories: Code-approved galvanized or cadmium-plated steel joist hangers, framing anchors, fasteners and other such connection devices of standard manufacture and of the types indicated, Simpson Strong Ties, KC Metals Superspeed, or equal. Use offset and skewed hangers, where required by framing geometry.

D. Construction adhesive (roof sheathing): ASTM D 3498 with VOC no more than 70 g/l when computed in accordance with 40 CFR 59, subpart D (EPA Method 24), Franklin International Titebond, Bostick Chem-Calk, Schnee-Morehead SM9200, Grabber Subfloor Adhesive, or equal.

E. Flashing at perimeter of vertical exterior openings: 6-inch wide Sealtight Air-Shield by WR Meadows, Ice and Water Shield by WR Grace, or equal.

F. Building paper: Rosin-sized building paper 0.010-inch thick, or 15 lb. unsaturated felt.

G. Sill sealer:

1. Protecto Wrap “Premium Energy Sill Sealer.”
2. Amofoam “Sill Sealer.”
3. Dow Chemical Co. “Sill Seal Gap Filler.”
4. Owens Corning “Foamsealr Sill Plate Gasket.”
5. Sandell Manufacturing “AF 500 Sill Seal.”

~~H.Plate liner (use under sill plate on sheathing): “Protecto Energy Plate Liner” by Protecto Wrap.~~

2.4 TREATMENT OF LUMBER AND PLYWOOD

A. Preservative treatment by pressure process: AWPA C2 (lumber) and AWPA C9 (plywood), except that lumber that is not in contact with the ground and is continuously protected from liquid water may be treated according to AWPA C31 with inorganic boron (SBX).

1. Kiln-dry material after treatment to a maximum moisture content of 19 percent for lumber and 15 percent for plywood.
2. Mark each treated item with treatment quality mark of an inspection agency approved by the American Lumber Standards Committee Board of Review.

3. Application: Treat items indicated on Drawings, and the following:

   a. Wood cants, nailers, curbs, equipment support bases, blocking, stripping, and similar members in connection with roofing, flashing.
   b. Wood sills, sleepers, blocking, furring, stripping, and similar concealed members in contact with masonry or concrete.
   c. Wood framing members less than 18 inches above grade.
   d. Wood floor plates that are installed over concrete slabs directly in contact with earth.

B. Fire retardant treatment: TBD.

PART 3 - EXECUTION

3.1 EXAMINATION

A. Verify conditions and measurements affecting the work of this Section at site.
B. Correct detrimental conditions before proceeding with installation.

3.2 GENERAL

A. Erect framing neatly and substantially to best trade standards, including preparatory work for subsequent trades and conditions not actually detailed.
B. Unless otherwise indicated. Do not space framing and furring members over 16 inches o.c.
C. Selection of lumber pieces:

   1. Carefully select all members. Select individual pieces so that knots and defects will not interfere with placement of bolts, with nailing or when making connections.
   2. Cutout and discard pieces with defects that make the piece unable to serve its intended function. The Design Consultant may reject lumber, whether or not it has been installed, for excessive warp, twist, bow, crook, mildew, fungus or mold, as well as for improper cutting or fitting.
   3. Do not shim sills, joists, short studs, trimmers, headers, lintels and other framing members.

D. On framing and furring members to receive a finished wall or ceiling, align the finish surface to vary not more than 1/8-inch from a theoretical plane or surfaces of the room or space, unless more stringent tolerance is specified. Make corners square.
E. Install wood screws and lag bolts with complete penetration up to head. Bore lead holes approximately 3/4 of diameter and same depth as shank; continue holes to a depth equal to length of the screw but with diameter approximately 3/4 of thread root.
F. Drill holes in pieces where splitting may occur.

   1. Remove split lumber and replace with new members.
   2. Fasten framing anchors and steel bridging with galvanized special nails furnished with hardware in every nail hole, except where noted to be welded to structural steel supports in which case comply with AWS requirements.

G. No penetrated nail points are allowed in exposed construction.
H. Install sill plates on continuous layer of "Sill Sealer" held in place temporarily with compatible adhesive. Seal plate continuously to foundation wall with Protecto Wrap “Triple Guard Energy Sill Sealer.”

I. Where possible, assemble nailed joints so that load acts at right angle to the nail (shear). Where nailing at right angle is impossible, toe-nail at an angle approximately 30-degree to the wood grain.

J. Tighten bolts and re-tighten shortly before being covered.

1. Make bolt holes in wood the same diameter as the bolt. After tightening, nick bolt threads to prevent nut loosening.
2. Provide bolts and lag screws with washers under heads and nuts that bear on wood.
3. Where a finish material will be installed over the bolt, install bolt head or nut so that they are recessed or flush with the face of the member being bolted.

K. Anchor sills with fasteners of the size and spacing indicated. Provide a minimum of 2 fasteners per piece. Bed sill on cement/sand dry-pack (1:3 mix) for full bearing where the floor is irregular.

L. Do not cut or notch structural members, except as indicated or directed by the Design Consultant. Reinforce interrupted members as detailed.

M. Make joints accurately and neatly for a square, tight fit. Remove and replace defective work.

N. Frame walls and partitions at corners and intersections so no wall material can extend from one room to another. Where 2 or more studs are cut, provide header beams over the opening.

1. Extend wall and partition studs and mullions continuously from sill to plate, unless otherwise indicated. In stud walls and partitions, extend at least one stud from sill to plate on each side of interior openings and 2 studs on each side of exterior openings. In addition, place one stud trimmer to support each end of lintels over openings.
2. Double plates unless a lintel replaces the lower member. Stagger plate joints at least 4-feet.
3. Frame stud partitions, furring or walls containing electrical panels, plumbing, or other pipes to give required clearance for piping and fixtures. Do not place pipes exceeding 1/3 of plate width in partitions used as bearing or shear walls. Locate in furring clear of studs unless detailed otherwise. Place approved piping in center of plates using a neat hole; no notching will be allowed. Pipes shall not pass through plates less than 5-1/2-inch wide.

O. Install joists, lintels, beams and rafters with crown up, unless otherwise noted. Cut members making structural contact with bearings or each other for full bearing.

P. No splices are permitted in structural members.

Q. Treat field cuts and penetration in pressure-treated lumber in compliance with AWPA M4.

R. Provide flashing membrane, minimum of 6-inch wide at perimeter of exterior openings. Lap in the direction of water flow.

1. Where no solid backing exists to support the flashing membrane, provide either plywood, or tight, solid blocking between studs. Membrane must be solidly supported at all locations.

3.3 PLYWOOD SHEATHING

A. Layout and attach to supports as indicated on the Drawings. Use screws for roof sheathing directly under the PVC roofing membrane; DO NOT use nails. Drive screws slightly below the surface of the plywood without breaking the plywood face layer. Replace misplaced screws by removing completely and driving new screws in solid roof framing member.

1. Install plywood with 1/16-inch space between panels for expansion and contraction. Do not force panels in place.

2. Place end joints over supports with structural plywood roof sheathing face grain running perpendicular to supports except as otherwise shown. Install top layer of roof sheathing perpendicular to the base layer.
3. Solid block unsupported panel edges in all cases for structural roof sheathing; where indicated elsewhere.

B. Install floor sheathing with best side up. Fasten with construction adhesive and annular ring or screw nails.

1. Comply with APA requirements for glued floor system.
2. Where a double layer is indicated, cover first layer of plywood with building paper stapled, and joints lapped 2-inches. Cover the building paper with a second layer of plywood with joints staggered at least 16-inches from first layer.

C. Cover roof sheathing with roofing material as soon as possible after installation. Do not leave exposed to the elements longer than 2 days.

3.4 BLOCKING/FURRING/BRIDGING/NAILERS

A. Blocking:

1. Solid block joists and rafters over all supports with blocking of the same size and material as the joist or rafter.
2. Provide fire blocking where required by Code. Locate other blockings to facilitate installation of finishing materials, fixtures, trim and soffits.

B. Furring:

1. Continuous and spaced at 16-inches o.c. maximum.
2. Install plumb and level. Shim where necessary to provide a true, even plane suitable to receive the finish required.
3. Attach to concrete and masonry with shot pins in pre-drilled holes.

C. Bridging:

1. Use 2 by 3 inches cross bridging, 2 inches solid bridging or 16-gage galvanized metal bridging.
2. Nail bottom ends of bridging only after sheathing has been nailed.

D. Nailers:

1. Provide nailers at connections of wood materials, and other finish materials to concrete, CMU and metal framing.
2. Template and drill nailers to match holes provided in steel framing and clips and install same, furnishing necessary bolts and washers.

3.5 CLEANING

A. Dispose of pressure-treated wood in authorized disposal area. Do not bury wood on the jobsite.

END OF SECTION

SECTION 06 20 00 - FINISH CARPENTRY

PART 1 - GENERAL

1.1 SUMMARY

A. Section includes exposed, site finished, non-structural wood items other than casework:

1. Interior wood frames, trim and moldings.
2. Rough and finish hardware for this work.
3. Nailers and blockings for the work of this Section.

B. Related requirements:

1. Division 01 for LEED requirements.
2. Division 06 for rough and miscellaneous carpentry, and all other architectural woodwork.
3. Division 08 for wood doors and all other hardware.

1.2 SUSTAINABLE DESIGN REFERENCE

A. USG Green Building Council (USGBC).

1.3 SUBMITTALS

A. Shop Drawings: Detailed, large Shop Drawings showing materials, dimensions, profiles, and fabrication details.

B. Samples:

1. Minimum twelve-inch length Samples of each type of wood and finish.
2. Full size Samples of each type of hardware.
3. Approved Samples will serve as Design Consultant's control samples.

C. LEED: LEED certification Product Data as specified in Section 01 81 13, "Sustainable Design Requirements", for the following LEED credits:

1. Credit MR 4.1 & 4.2, Recycled Content
2. Credit MR 5.1, Regional Materials, Manufactured Locally.
3. Credit MR 5.2, Regional Materials, Harvested / Extracted Locally.
4. Credit MR 6, Rapidly Renewable Materials.
5. Credit MR 7, Certified Wood.
6. Credit EQ 4.1, Low Emitting Materials, Adhesives & Sealants.
7. Credit EQ 4.1, Low Emitting Materials, Paints.
8. Credit EQ 4.1, Low Emitting Materials, Composite Wood.

1.4 QUALITY ASSURANCE

A. Installer qualifications: As specified in Section 06 40 23.

1.5 HANDLING

A. As specified in Section 06 40 23.

1.6 PROJECT CONDITIONS

A. As specified in Section 06 40 23.

PART 2 - PRODUCTS

2.1 LUMBER

A. Seasoning: Wood shall be properly kiln-dried according to accepted methods for the thickness and species required in compliance with the reference WI Architectural Woodwork Standards (AWS) .
B. Species and grade:

1. Concealed nailers and blockings: As specified in Section 06 10 00.
2. Exposed surfaces: Birch, Poplar or other close grained hardwood suitable to receive an opaque finish.

2.2 ROUGH HARDWARE

A. Wood screws, nails and bolts: As selected by the Contractor.

2.3 FINISH MATERIALS

A. Fillers, sealers, stains and finish coating systems: RJ McGlennon Co., Inc. Sherwin Williams, Sikkens, Minwax, or WD Lockwood, or equal (stains and dyes), used with compliant stains and bases.

2.4 FABRICATION

A. General:

1. Fabricate finish carpentry to the dimensions, profiles and details shown.
2. Unless otherwise acceptable to the Design Consultant, do not use finger-jointed lumber.
3. Where necessary to fit at site, provide ample allowance for cutting and fitting.
4. Whenever possible, conceal means of fastening various parts and members together in windows. Where exposed nailing is unavoidable, neatly set nails for putty stopping.

B. Wood trim:

1. Fabricate to profiles and dimensions shown in compliance with AWS~~I~~ section 300~~7~~ and 90~~1~~0, Premium Grade requirements where scheduled to receive a transparent finish; Custom Grade requirements where scheduled to receive an opaque finish.
2. Rout-out the back of trim members to be applied to flat surfaces, except for members with ends exposed in the finished work.

2.5 FINISHING

A. In preparation for finish, clean woodwork and fill nail holes. Use matching wood filler where woodwork will receive a transparent finish.
B. Finish woodwork smoothly dressed, belt-sanded at mill and hand sanded before its installation. Finish surfaces shall be free from open joints, hammer and machine marks, structural defects and surface blemishes.

C. For woodwork scheduled to receive a transparent finish: Comply with ~~WI Manual of Millwork~~ AWS and the following.

1. Grade: Match the AW~~I~~S Grade of the finish to the AW~~I~~S Grade of the items to be finished.
2. System: AWS~~WI~~ section 1500 ~~system No. 2, water reducible acrylic~~ pre- or post-lacquer, or conversion varnish.
3. Filler: Fill open grain wood.
4. Staining: Match Design Consultant's control samples.
5. Sheen: Match Design Consultant's control samples.

D. Backprime woodwork on all surfaces which will be concealed with one coat of wood primer. Schedule delivery to allow time for application and drying of backprime coat before installation of woodwork for those items that are not backprimed in the shop; for work scheduled to receive a transparent finish, backprime with a clear varnish.

PART 3 - EXECUTION

3.1 EXAMINATION/PREPARATION

A. Examine conditions and measurements affecting the work of this Section at site.
B. Verify that detrimental conditions are corrected before proceeding with installation.
C. Condition woodwork to average prevailing humidity conditions in installation areas prior to installing.

3.2 INSTALLATION

A. Install work of this Section, plumb, level, with tight, hairline, flush joints. Shim as required using concealed shims.
B. Cut to fit when not shop-fabricated or shop-cut to exact size. Where woodwork abuts other finished surfaces, scribe and cut for accurate fit. Before making cutouts, drill pilot holes at corners.

3.3 FIELD QUALITY CONTROL

A. Clean exposed surfaces and leave ready to be painted for surfaces to be field painted (opaque finish only).
B. Field touchup, for work with a transparent finish, is the responsibility of the installer and shall include filling in of nail holes, refinishing of raw surfaces resulting from job fitting, repair of job inflicted scratches and mars, and final clean-up of the finished surfaces.
C. Protecting:

1. Do not store materials adjacent to woodwork unless it is protected against damage and staining.
2. When painting or touching-up surfaces contiguous to woodwork, mask it with non-staining Kraft paper and tape.

D. Replace woodwork damaged beyond satisfactory field repair, as determined by the Design Consultant, with satisfactory millwork.

END OF SECTION

SECTION 06 40 23 – INTERIOR ARCHITECTURAL WOODWORK

PART 1 - GENERAL

1.1 SUMMARY

A. Section includes:

1. Plastic laminate-clad casework.
2. Plastic laminate-clad countertops.
~~3.Veneered plywood casework and shelving.~~
~~4.Veneered plywood countertops.~~
~~5.Factory-finishing architectural woodwork.~~
~~6.~~3. Items associated or integral with architectural woodwork:

   a. Supports, reinforcement, and like components.
   b. Hardware and accessories.
   ~~c.Concealed steel supports.~~

B. Related requirements:

1. Division 01 for LEED requirements.
2. Division 06 for the following:

   a. Rough carpentry for wood furring, blocking, shims, and hanging strips required for installing woodwork and concealed within other construction before woodwork installation.
   b. Finish carpentry.
   c. Miscellaneous carpentry.
   d. Solid surfacing countertops.

3. Division 22 for plumbing fixtures and fittings related to architectural woodwork.
4. Division 26 for electrical connections to LED lighting.

1.2 REFERENCES

A. Architectural Woodwork Standards (AWS) published jointly be the Woodwork Institute (WI), the Architectural Woodwork Institute (AWS), and the Architectural Woodwork Manufacturers of Canada (AWMC).
B. USG Green Building Council (USGBC).

1.3 SUBMITTALS

A. Procedure: In accordance with AWS.
B. Product Data: Submit for specialty items required by this Section that are not manufactured by the millwork manufacturer.
C. Shop Drawings:

1. Comply with AWS standards.
2. Furnish a WI Certified Compliance Label on the first page of shop drawings.
3. The Drawings are diagrammatic and show required profiles and dimensions. Submit large scale, dimensioned, shop drawings showing location of each item of millwork, plans and elevations, large-scale details, attachment devices, finishes, and finish hardware types and locations.

a. Include hardware list, identifying each item by manufacturer, catalog number, size, finish and intended use. Include catalog cut sheets.
b. Indicate method of seismic construction~~ by WI-Seismic Test Codes Number~~.
c. Coordinate Shop Drawings with the work of other related trades which is a part of, or will be incorporated with the architectural woodwork, such as plumbing, and electrical, ~~and electronic equipment,~~ along with adjacent and abutting materials to which this work is to be secured.

~~d.Obtain the approval of the millwork shop drawings by these related trades (as evidenced by their stamp and signature thereon) before submitting shop drawings to the Design Consultant.~~

D. Samples:

~~1.Lumber and panel products:~~

~~a.Submit 4 samples for the following, minimum 8 by 10 inches: Lumber with or for transparent finish for each lumber specie and cut, finished on one side and one edge.~~
~~b.Veneer: Leaves representative of and selected from flitches showing species, cuts, finishes, textures and patterns to be used.~~
~~c.Veneer-faced panel products with or for transparent finish for each species and cut: Include at least one face-veneer seam and finish as specified.~~

1. Plastic laminate~~s~~: 24-inch square panel with plastic ~~For each~~ laminate of the type, color, texture, pattern, and surface finish selected, laminated to a voidless softwood plywood, minimum 3/4-inch thick. Finish all edges of plywood core with wood filler sanded smooth and 2 coats of high solids urethane varnish; no edge banding. Finish the backside of the panel with cabinet liner ~~, with one sample applied to core material and specified edge material applied to one edge~~.

~~3.Corner pieces:~~

~~a.Cabinet-front frame joints between stiles and rails, as well as exposed end pieces, 18 inches high by 18 inches wide by 6 inches deep for each type of finish.~~
~~b.Miter joints for standing trim.~~

2. Hardware: One unit for each type of exposed cabinet hardware and accessories, and finish samples.
3. Approved Samples will serve as Design Consultant's Control Samples.

E. Product Data:

1. Evidence of no added Formaldehyde panel products.
2. Evidence of FSC Certified products.

F. LEED: LEED certification product data as specified in Section 01 81 13, "Sustainable Design Requirements", for the following LEED credits:

(a) Credit MR 4.1 & 4.2, Recycled Content.
(b) Credit MR 5.1, Regional Materials, Manufactured Locally.
(c) Credit MR 5.2, Regional Materials, Harvested / Extracted Locally.
(d) Credit MR 6, Rapidly Renewable Materials.
(e) Credit MR 7, Certified Wood.
(f) Credit EQ 4.1, Low Emitting Materials, Adhesives & Sealants.
(g) Credit EQ 4.1, Low Emitting Materials, Paints.
(h) Credit EQ 4.1, Low Emitting Materials, Composite Wood.

G. Closeout: Deliver all documentation required herein, including but not limited to.

1. WI Certificates of Compliance.
2. As-built shop drawings reflecting changes made in the course of the Project.

1.4 QUALITY ASSURANCE

A. General: Work shall be in accordance with AWS Standards for the grade or grades specified.

B. Certified compliance:

1. Before delivery to the jobsite the woodwork supplier shall provide a WI Certified Compliance Certificate indicating the millwork products being supplied and certifying that these products fully meet the requirements of the Grade or Grades specified.
2. Each elevation of casework and each laminated plastic top shall bear a WI Certified Compliance label.
3. At completion of installation the woodwork installer shall provide a WI Certified Compliance certificate indicating the products installed, and certifying that the installation of these products fully meets the requirements of the Grade or Grades specified.
4. Fees charged by WI for their Certified Compliance program shall be included in the ~~bid~~Contract price.

C. Manufacturer/installer qualifications:

1. Firm licensed by WI under their "Certified Compliance Program."
2. Firm with not less than 5 years of production experience similar to this Project, whose qualifications indicate the ability to comply with the requirements of this Section.
3. Firm must have at least one project in the past 5 years where the value of the woodwork was within 20 percent of the cost of woodwork for this Project.

D. Single source responsibility: A single manufacturer shall produce and install the work of this Section.

E. Special design requirements: Sequence-matched wood veneers.

F. Quality standard: Unless otherwise indicated, comply with AWS standards for grades of interior architectural woodwork indicated for construction, finishes, installation, and other requirements.

~~1.Provide WI-certified compliance labels and certificates indicating that woodwork, including installation, complies with requirements of grades specified.~~

G. Requirements of regulatory agencies: Provide evidence of compliance with Code for architectural woodwork.

1. Particle board, MDF, and hardwood plywood used in this Project must comply with California Air Resource Board standards for formaldehyde emissions.

H. Mockups:

1. Before starting production work, assemble a mockup for each type of finish as follows for City and Design Consultant's ~~approval~~review:

a. One base cabinet with one drawer, one door, a countertop, and hardware.
b. Finish the mockups as intended for the finish work.
c. Mockups must be located ~~within a 25-mile radius of~~ at the Project site.
d. Approved mockups will be used as a standard for the Work and may be used for the Project.

1.5 HANDLING

A. Procedure: In accordance with AWS Standards.
B. Delivery:

1. Deliver materials to Project site in protective wrappings clearly labeled with identification of manufacturer, item name and specific installation location.
2. Deliver architectural woodwork only when the area of operation is enclosed and broom clean, and cementitious work is dry.

C. Storage:

1. Store materials in a clean, well-ventilated storage area protected from direct sunlight, excessive heat, rain and moisture; in which relative humidity is between 45 and 65 percent at 60 to 90 degrees F.
2. The air conditioning or heating system shall be on and functioning and the architectural millwork shall be acclimated to these conditions for 72 hours prior to installation.
3. Do not subject millwork to abnormal heat, extreme dryness, humid conditions, sudden changes in temperature, or direct sunlight.
4. Store cabinets carefully and set or store on a level floor. Protect the exposed finished portions from bumping, scratching, staining and other damage.

D. Handling: Handle with clean hands, taking care not to slide one item over the other; when primed or sealed, properly re-stack when dry. Handle prefinished materials with ~~white gloves~~clean hands.

1.6 PROJECT CONDITIONS

A. Acclimation: Condition materials to moisture content between 8 percent and 12 percent.

PART 2 - PRODUCTS

2.1 MATERIALS

A. General: Provide materials that comply with requirements AWS Quality Standard for each type of woodwork and quality grade specified, unless otherwise indicated.
B. Lumber:

1. Seasoning: Wood shall be properly kiln-dried according to accepted methods for the thickness and species required, with moisture content of 6 percent to 12 percent for boards up to 2 inches nominal thickness, and shall not exceed 19 percent for thicker pieces.
2. Pressure-treatment: As specified in Section 06 10 00.
~~3.For a transparent finish: Match species and cut of contiguous veneer specified below.~~

C. Panel core products:

~~1.Medium density fiberboard (MDF) or particleboard.~~
~~2.Softwood Plywood: DOC PS 1, Medium Density Overlay.~~
1. ~~Veneer-faced p~~Panel products: ~~(hardwood~~ Russian Baltic Birch or Finnish Birch voidless plywood~~): HPVA HP-1~~, or equal plywood, ~~non-telegraphing hardwood~~ manufactured with exterior adhesive containing no urea formaldehyde, ~~Prefinished panel products:~~ 3/4-inch thick, ~~pre-finished plain sliced Russian Baltic Birch plywood,~~ Grade 4B~~, 13-ply for open shelves and boxes~~.
2. Edges: Exposed.
3. Sealer: Clear.

D. Plastic laminate: NEMA LD 3, grades ~~as indicated or, if not indicated, as required by AWS Quality Standards~~specified as selected by the Design Consultant, or equal by one of the following.

1. Manufacturers:

   a. Abet Laminati, Inc.
   b. Arborite; Division of ITW Canada, Inc.
   c. Formica Corporation.
   d. Lamin-Art, Inc.
   e. Nevamar Company, LLC; Decorative Products Div.
   f. Panolam Industries International Incorporated.
   g. Westinghouse Electric Corp.; Specialty Products Div.
   h. Wilsonart International; Div. of Premark International, Inc.
   i. Or equal.

2. Types:

   a. Exposed surfaces: Color core, Grade 41 (HCS) 1.3 mm) or Grade 43 (HCS 1.6 mm thick.
   b. Semi-exposed and concealed surfaces: Cabinet liner, Grade 72, CLS 0.5 mm thick. Match color and texture of the above.

E. Edgebands: None required; finish edges as specified for Samples above and to match same.~~TBD~~.

2.2 HARDWARE AND ACCESSORIES

A. General:

1. As required for a complete installation, as indicated and specified, and as listed in WI's current Approved Hardware Listings, except as modified herein.
2. Hardware finish shall match door hardware specified in Section 08 71 00, unless otherwise noted.

B. Hinges:

1. ADA~~WS~~-compliant, concealed, by Hafele, Blum, Inc., or equal.
2. ~~Grade 1 (institutional), OR~~ Grade 2, concealed (European style) with 3-way independent adjustment.
3. Self-closing, 165-degree opening, except 90 degrees where door opens against a wall, or otherwise limited to 90 degrees.

   a. Hafele, Model 329.07.6XX, or equal, 165 degree hinges.

C. Pulls:

1. Back-mounted pulls: ADA-compliant, BHMA A156.9, B02011 by Doug Mocket & Co., Hafele, or equal.
2. ~~: Back mounted,~~ Type: Solid metal wire pulls, 4 inches long, 5/16 inch in diameter 2-1/2 inches deep.

D. Catches: Magnetic, BHMA A156.9, B03141.
E. Adjustable shelf standards and supports:

1. BHMA A156.9, B04071; with shelf rests, B04081.
2. Shelf supports for adjustable shelves in wall-hung cabinets and the upper half of tall cabinets shall be designed to prevent shelves from sliding forward in a seismic event.

F. Sliding mechanisms: Woodwork Institute approved, self-closing metal runners with ball-bearing rollers, full extension type, side or bottom mounted, or 110-lb progressive under-mount.

1. Pencil Drawers: 50 lb rated, Hafele Model 422.24.XXX, or equal.
2. General purpose drawers: 75 lb rated, Hafele Model 422.88.XXX, or equal.
3. General purpose drawers more than 24 inches wide or 6 inches deep: 110 lb rated. Hafele Moov-it or equal double-walled drawer.
4. File drawers: 100 lb rated.
5. Lateral file drawers more than 24 inches wide: 150 lb rated. Hafele Model 422.17.XXX, or equal.
6. Keyboard Slides: Grade 1HD-100; for computer keyboard shelves.
7. Trash Bin Slides: Grade 1HD-200; for trash bins not more than 20 inches high and 16 inches wide.

G. Keyboard and mouse tray:

1. Human Scale Model A115.
2. Doug Mockett & Co., Inc. Model KP6.
3. Rockler Woodworking & Hardware Model 37930.
4. Accuride Model CBERGO-Tray 200, or Hafele Model 632.52.300.
5. Knape & Vogt Model 5710.
6. Hafele Model 632.68.430.

H. Door locks; BHMA A156.11, E07121, Hafele Model 232.14.XXX, or equal.
I. Drawer Locks: BHMA A156.11, E07041, Hafele No. 232.14.XXX., or equal
J. Grommets for cable passage through countertops: 2-inch OD, brown molded-plastic grommets and matching plastic caps with slot for wire passage, by Hafele, Doug Mocket & Company, Inc., or equal.
K. Paper Slots: 12 inches long by 1-3/4 inches wide by one inch deep; brown, molded-plastic, paper-slot liner with 1/4-inch lip by Doug Mockett & Company, Inc., or equal.
L. Wire managers: Plastic, of the color selected by the Design Consultant, by Hafele, Doug Mockett & Co., Inc. WM-2A, or Blanton & Moore WMC-4000 Series, or equal. Provide at each computer station.
M. Casters: TBD.
N. Internal LED lighting: TBD.
O. Anchors:

1. Select material, type, size, and finish required for each substrate for secure anchorage.
2. Provide nonferrous-metal or hot-dip galvanized anchors and inserts on inside face of exterior walls and elsewhere as required for corrosion resistance.
3. Provide toothed-steel or lead expansion sleeves for drilled-in-place anchors.

P. Adhesives: Type I, water-resistant.

2.3 FINISHES

A. Wood fillers, sealers, stains and finish coating systems (stains and dyes), used with compliant stains and bases by one of the following manufacturers:

1. Minwax.
2. RJ McGlennon Co., Inc.
3. Sikkens.
4. Sherwin Williams.
5. WD Lockwood.
6. Or equal.

B. Hardware finishes:

1. Exposed hardware finishes, complying with BHMA A 156.18 for BHMA finish number indicated.

~~a.Dark, oxidized, satin bronze, oil rubbed: BHMA 613 for bronze base; BHMA 640 for steel base; match Design Consultant's sample.~~
~~b.Bright brass, clear coated: BHMA 605 for brass base; BHMA 632 for steel base.~~
~~c.Satin brass, blackened, bright relieved, clear coated: BHMA 610 for brass base; BHMA 636 for steel base.~~
~~d.~~a. Satin chromium plated: BHMA 626 for brass or bronze base; BHMA 652 for steel base, or~~.~~
~~e.Bright chromium plated: BHMA 625 for brass or bronze base; BHMA 651 for steel base.~~
~~f.~~b. Satin stainless steel: BHMA 630.

2. For concealed hardware, provide manufacturer's standard finish that complies with product class requirements in BHMA A156.9.

2.4 FABRICATION, GENERAL

A. Casework:

1. General: Fabricate casework in compliance with requirements of AWS Custom Grade.
2. AWS construction types A, frameless.
3. AWS cabinet and door interface style 1 - overlay.

B. Openings in casework for equipment provided under this Contract:

1. Examine size of equipment by measuring the actual equipment, from shop drawings, or from templates provided by those furnishing the equipment.
2. Make accurate cutouts and openings, plumb, level and square. When the equipment does not cover cut edges, finish edges same as faces.
3. Sand edges of cutouts to remove splinters and burrs.
4. Seal edges of openings with a coat of varnish.

C. Finish hardware: Fit hardware accurately and install in compliance with the hardware manufacturer's instructions. Accurately fit doors and drawers with uniform clearance at all edges. Gaps between doors, drawers and false fronts shall not exceed 1/16~~8~~ inch.

2.5 WOOD CABINETS FOR TRANSPARENT FINISH

A. General:

1. Match Design Consultant’s control samples. In preparation for finish, clean woodwork and fill nail holes using matching wood filler.
2. Finish woodwork at the mill, smoothly dressed. Sand, using same sequence and grade of abrasive used in the Design Consultant’s control sample to achieve the same finish. Clean woodwork thoroughly with a tack cloth.
3. Produce surfaces free from open joints, hammer and machine marks, structural defects and surface blemishes.

2.6 PLASTIC-LAMINATE CABINETS

~~A.Grade: AWS Premium.~~
A. Exposed interior surfaces: Low pressure melamine overlay.
B. Semi-exposed surfaces: Low pressure melamine overlay.

C. Doors, drawer fronts, and false fronts: Flush overlay.

~~1.Edge bands at doors, drawer fronts, and false fronts: TBD.~~

D. Drawers: Meet AWS requirements for the Grade specified.
E. Colors, patterns, and finishes: Match Design Consultant's sample.

2.7 COUNTERTOPS

A. Plastic laminated tops:

1. Core material: Particleboard, unless otherwise indicated.
2. Backsplash: Straight edge.
3. Edge configurations: As indicated~~TBD~~.

~~B.Hardwood Plywood tops:~~

~~1.Backsplash: Straight edge.~~
~~2.Edge configurations: Exposed multi-ply.~~

2.8 SHOP FINISHING

A. Grade: Provide finishes of same grades as items to be finished.
B. General: Finish architectural woodwork at fabrication shop as specified in this Section. Defer only final touchup, cleaning, and polishing until after installation.
C. Seal prefinished plywood edges to remain exposed with clear sealer.
D. Back prime woodwork on all surfaces that will be concealed with one coat of wood primer or clear varnish. Schedule delivery to allow time for application and drying of back prime coat before installation of woodwork for those items that are not back-primed in the shop.
E. Factory finishing: For drawers interiors not clad with low pressure melamine overlay, apply 2 coats of high solids, transparent varnish.

PART 3 - EXECUTION

3.1 EXAMINATION

A. Examine conditions and measurements affecting the work of this Section at site.
B. Correct detrimental conditions before proceeding with installation.

3.2 PREPARATION

A. Condition woodwork to average prevailing humidity conditions in installation areas prior to installing.

3.3 INSTALLATION

A. General:

1. Comply with AWS requirements for Grade of the items being installed, and Code for seismic attachment and bracing.
2. Install work plumb, level, true and straight with no distortions, to a tolerance of 1/8 inch in 8 feet from plumb and level.
3. Shim using concealed shims.
4. At gypsum board construction, anchor through wall surface to solid blocking, backing plates ~~and~~ or studs. Indicate location of required concealed backing on casework shop drawings.

5. Furnish fillers, closures and trim as required for a complete installation. Scribe in place where required.
6. Subdrill holes in pieces where splitting may occur; size holes slightly smaller than diameter of nail.
7. Do not drive nails closer to edge of lumber than 1/4 length.
8. Remove lumber split in nailing and replace with sound members.
9. Make joints accurately and neatly, square, flush and tight.
10. Install wood screws and lag bolts with complete penetration to head. Bore lead holes equal to root diameter of the screw or bolt. Drive flush or recess with nailer face.
11. Provide nailers and blockings where indicated and required.

    a. Template and drill to match anchor bolts in steel members, concrete and masonry.
    b. Where materials are applied over flush nailer surfaces, use carriage bolts with heads drawn flush into top of nailer or blockings, or counterbore holes to recess washers and heads of nuts.

~~B.Pressure-treated wood products: Do not rip or mill treated lumber. End cuts, drilling holes and joining cuts are permitted. Plywood may be cut in any direction.~~

~~1.Use pressure-treated wood where required by Code and as specified above.~~
~~2.Use fire-treated wood where required for blockings and nailers located in metal-framed walls, partitions and ceilings.~~

~~3.4ANCHORAGE~~

~~A.Fastening lumber or plywood to lumber:~~

~~1.Space nails a maximum of 12 inches o.c. and stagger across face of piece. Locate fastener also within 3 inches of each end of piece.~~
~~2.Drive nail heads flush with wood surfaces. Nails shall penetrate adjoining piece a minimum of 1-1/4-inch.~~

~~B.Fastening lumber or plywood to concrete:~~

~~1.Space anchors a maximum of 36 inches o.c. and stagger if lumber is more than 5 inches wide.~~
~~2.Make anchor heads flat or countersunk flush with surface, but not countersunk more than 1/3 the thickness of piece to be fastened.~~
~~3.Anchor withdrawal resistance shall be a minimum of 400 lb. per anchor, or number of fasteners increased accordingly from that specified. Minimum penetration of 1-1/2-inch into concrete or masonry.~~

~~C.Fastening lumber or plywood to steel:~~

~~1.Space screws a maximum of 24 inches o.c. and stagger if lumber is more than 5 inches wide.~~
~~2.Drive screw heads flush with face of plywood or lumber.~~
~~3.Anchor shall penetrate a minimum of 1/4 inch through the steel.~~

3.4 CASEWORK

A. Cabinets:

1. Install in a manner consistent with the specified quality grade, plumb, level, true and straight with no distortions.
2. Install without distortion so doors and drawers fit openings properly and are accurately aligned. Adjust hardware to center doors and drawers in openings and to

provide unencumbered operation. Complete installation of hardware and accessory items as indicated.

3. Maintain veneer sequence matching of cabinets with transparent finish.

B. Secure to ground, stripping and blocking with countersunk, concealed fasteners and blind nailing as required for a satisfactory installation. Scribe and cut for accurate fit to adjacent finished surfaces.
C. Properly scribe work abutting other building components.
D. Countersink mechanical fasteners used at exposed and semi-exposed surfaces, excluding installation attachment screws and those securing cabinets end to end.
E. Install so doors and drawers fit openings properly and are accurately aligned. Adjust hardware to center doors and drawers in openings and to provide unencumbered operation. Complete installation of hardware and accessory items as indicated.
F. Install cabinets with no more than 1/8-inch in 96-inch sag, bow, or other variation from a straight line.
G. Doors and drawers shall operate freely, but not loosely, without sticking or binding, with all hardware adjusted and functioning properly.

3.5 COUNTERTOPS

A. Comply with AWS~~I~~ Standards~~manual of Millwork~~.
B. Anchor securely to base units and other support systems as indicated on approved Shop Drawings. Fasten joints in tops with draw-bolt type fasteners let into underside of top.
C. Install countertops with ends ~~[~~flush with~~ **—OR- overhanging]**~~ exposed ends of base cabinets unless otherwise indicated.
D. Verify opening requirements and make cutouts as required.
E. Scribe laminated plastic tops to walls and other adjacent items indicated.
F. Fill gaps between tops and walls and other adjacent items with color matched sealant.

3.6 FIELD QUALITY CONTROL

A. General: Field touchup ~~shall be~~is the responsibility of the installer and shall include filling in of nail holes, refinishing of raw surfaces resulting from job fitting, repair of job inflicted scratches and mars, and final clean-up of the finished surfaces.
B. Protecting:

1. Do not use the top of casework for storage.
2. Do not store materials adjacent to woodwork unless it is protected against damage and staining.
3. When painting or touching-up surfaces contiguous to woodwork, mask it with non-staining Kraft paper and tape.

C. Replace millwork damaged beyond satisfactory field repair with satisfactory woodwork, as determined by the City.
D. During final cleaning, remove protective covering and clean interior and exterior surfaces using procedures and materials recommended by manufacturer.

3.7 ADJUSTING AND CLEANING

A. Repair damaged and defective woodwork, where possible, to eliminate functional and visual defects; where not possible to repair, replace woodwork. Adjust joinery for uniform appearance.
B. Clean woodwork on exposed and semi-exposed surfaces. Touch up shop-applied finishes to restore damaged or soiled areas.
C. Clean, lubricate, and adjust hardware.
D. Do not bury wood of any type on the jobsite.

END OF SECTION

SECTION 06 61 16 - SOLID POLYMER COUNTERTOPS

PART 1 - GENERAL

1.1 SUMMARY

A. Section includes solid polymer countertops.
B. Related requirements:

1. Division 01 for LEED requirements.
2. Division 06 for casework supporting countertops.

1.2 DEFINITIONS

A. Solid polymer is defined as nonporous, homogeneous material maintaining the same composition throughout the part with a composition of acrylic polymer, aluminum trihydrate filler and pigment.

1.3 REFERENCES

A. Architectural Woodwork Institute “Architectural Woodwork Standard Section 11, “Premium Grade.”
B. USG Green Building Council (USGBC).

1.4 SUBMITTALS

A. Shop drawings:

1. Indicate materials, fabrication details, field jointing, adjacent construction and methods of support, integration of plumbing components, if applicable, and anchorages.
2. Show joint locations; locations is subject to the Design Consultant’s relocation at no additional to the City.
3. Show position of openings, with rough-in sizes. Provide templates for cast-in or placed frames or anchors; tolerances for item placement and temporary bracing of components.

B. Data: Manufacturer Product Data for specified products.
C. Samples:

1. 6-inch square Samples representative of color, texture and finish to be expected for final product, with a finished edge.
2. Cut sample and seam together for representation of inconspicuous seam.
3. Approved Sample will be retained as a standard for the work of this Section.

D. Manufacturer certificate: Certification that polymer meets or exceed specified requirements for stain resistance.
E. LEED: LEED certification product data as specified in Section 01 81 13, “Sustainable Design Requirements”, for the following LEED credits:

1. Credit MR 4.1 & 4.2, Recycled Content.
2. Credit MR 5.1, Regional Materials, Manufactured Locally.
3. Credit MR 5.2, Regional Materials, Harvested / Extracted Locally.
4. Credit MR 6, Rapidly Renewable Materials.
5. Credit EQ 4.1, Low Emitting Materials, Adhesives & Sealants.

F. Maintenance: Submit solid polymer manufacturer's care and maintenance data, including repair and cleaning instructions, and maintenance kit.

1.5 QUALITY ASSURANCE

A. Fabricator qualifications: Firm specializing in manufacturing the products specified in this Section with minimum 3 years documented successful experience.
B. Flammability and toxicity: Conform to applicable code for flame/smoke rating in accordance with ASTM E 84.

1.6 HANDLING

A. Store indoors, properly supported and off the floor.

1.7 SPECIAL WARRANTIES

A. Combined manufacturer/installed warranty:

1. Fabrication and installation must be performed by a solid polymer manufacturer Certified Fabrication/Installation source who will provide a brand plate for the application.
2. This warranty shall cover all fabrication and installation performed by the certified/applicator for 10 years from Substantial Completion.

1.8 MAINTENANCE

A. Furnish list of approved cleaning materials and procedure required and provide list of substances that are harmful to product. Include instructions for stain removal, surface and gloss restoration and scratch removal.

PART 2 - PRODUCTS

2.1 MATERIALS/PERFORMANCE REQUIREMENTS

A. Solid polymer components: Cast, nonporous, filled polymer, not coated, laminated or of composite construction with through body colors meeting ANSI Z124.3 or ANSI Z124.6, complying with the following:

1. Tensile Strength: 6,000 psi, ASTM D 638.
2. Tensile Modulus: 1.5 x 10-6 psi, ASTM D 638.
3. Tensile Elongation: 0.4% min., ASTM D 638.
4. Flexural Strength: 10,000 psi, ASTM D 790.
5. Flexural Modulus: 1.2 x 10-6 psi, ASTM D 790.
6. Hardness: >85, Rockwell "M" Scale, ASTM D 785.
7. 56 Barcol Impressor, ASTM D 2583.
8. Thermal Expansion: 1.80 x 10-5 in./in./°F, ASTM D 696.
9. Gloss (60° Gardner): 5–75 (matte—highly polished), ANSI Z124.
10. Light Resistance: (Xenon Arc) No effect, NEMA LD 3-2000, Method 3.3.
11. Wear and Cleanability: Passes, ANSI Z124.3 & Z124.6.
12. Stain Resistance: Sheets: Passes, ANSI Z124.3 & Z124.6.
13. Fungus and Bacteria Resistance: Does not support microbial growth, ASTM G21&G22.
14. Boiling Water Resistance: No visible change, NEMA LD 3-2000, Method 3.5.
15. High Temperature Resistance: No change, NEMA LD 3-2000, Method 3.6.
16. Izod Impact: 0.28 ft.-lbs./in. of notch, ASTM D 256, (Notched Specimen), (Method A).
17. Ball Impact: No fracture—1⁄2 lb. ball, NEMA LD 3-2000.

18. Resistance: Sheets: 1⁄4" slab—36" drop, Method 3.8, 1⁄2" slab—144" drop.
19. Specific Gravity: 1.7.
20. Water Absorption, Long-term: ASTM D 570.

    a. 0.4% (3⁄4").
    b. 0.6% (1⁄2").
    c. 0.8% (1⁄4").

21. Toxicity:

    a. 99 (solid colors), Pittsburgh Protocol.
    b. 66 (patterned colors), Test (“LC50”Test)

22. Flammability: All colors, ASTM E 84,

    a. (Class I and Class A): NFPA 255 & UL 723.
    b. Flame Spread Index: <25.
    c. Smoke Developed Index: <25

23. Superficial damage to a depth of 0.010 inch shall be repairable by sanding and/or polishing.
24. Thickness: As indicated on the Drawings.
25. Color: As selected by the Design Consultant from the manufacturer’s full palette~~TBD~~.
26. Sheen: ~~[matte] [~~Semigloss~~] [polished gloss] TBD.~~
27. Edge treatment: ~~TBD~~As indicated.
28. Sink mounting: As indicated~~TBD.~~
29. Splashes: As indicated~~TBD~~.

B. Adhesive: Permanent, waterproof, non-staining, as recommended by the solid polymer top manufacturer.
C. Sealants: As specified in Section 07 92 00.
D. Sink/lavatory mounting hardware: Manufacturer’s standard bowl clips, panel inserts and fasteners for attachment of undermount sinks/lavatories.
E. Insulating felt tape: Manufacturer’s standard for use with conductive tape in insulating solid surface material from adjacent heat source.

2.2 FABRICATION

A. Fabricate components to greatest extent practical to sizes and shapes indicated, in accordance with approved shop drawings and manufacturer’s printed instructions and technical bulletins.
B. Form joints between components using manufacturer’s standard joint adhesive without conspicuous joints.

    1. Reinforce with strip of solid polymer material, 2" wide.
    2. Provide factory cutouts for plumbing fittings and bath accessories as indicated on the drawings.
    3. Rout and finish component edges with clean, sharp returns.
    4. Rout cutouts, radii and contours to template.
    5. Smooth edges.

2.3 FINISHING

A. Polished finish on exposed surfaces to uniform sheen and texture and to match approved sample.

PART 3 - EXECUTION

3.1 EXAMINATION

A. Examine conditions and measurements affecting the work of this Section at site.
B. Correct detrimental conditions before proceeding with installation.

3.2 INSTALLATION

A. Install components in compliance with the approved shop drawings, the reference standard, and the polymer manufacturer's instructions, plumb, level, with tight, flush joints.
B. Install plumb and level, with tight, hairline, flush joints. Shim as required using concealed shims.
C. Anchor securely to base cabinets or other supports into underside of countertop.
D. Secure backsplashes to tops with concealed metal brackets at 16 inches o.c. and to walls with adhesive.
E. Scribe and fit accurately where they abut adjacent surfaces for a close fit.
   1. Fill space between countertops and walls with sealant; comply with the requirements of Section 07 92 00.
   2. Tool sealant uniformly to form a cove and shed water.
F. Apply backsplashes using ~~manufacturer's standard~~ color-matched silicone sealant.
G. Install countertops with no more than 1/8 inch in 96-inch sag, bow, or other variation from a straight line.

3.3 CLEANING/PROTECTING

A. Repair or replace damaged work which cannot be repaired to Design Consultant's satisfaction.
B. Protect finished work from damage by covering with heavy Kraft paper until final cleaning.

END OF SECTION

SECTION 07 13 13 - RUBBERIZED-ASPHALT SHEET WATERPROOFING

PART 1 - GENERAL

1.1 SUMMARY

A. Section includes sheet waterproofing membrane and drainage panels at below-grade building walls and in planters.
B. Related requirements: Division 01 for LEED requirements.

1.1 SUSTAINABLE DESIGN REFERENCE

A. USG Green Building Council.(USGBC).

1.2 DEFINITIONS

A. Waterproofing membrane: Pliable, self adhering sheet membrane, not less than 60 mils thick, consisting of a high density polyethylene film bonded to a layer of rubberized asphalt waterproofing compound.

1.3 ADMINISTRATIVE REQUIREMENTS

A. Pre-installation meeting:

1. Prior to start of installation, arrange a pre-installation meeting between the waterproofing manufacturer authorized representative, the Contractor, the installer , and the Design Consultant to review conditions of surfaces to be waterproofed, the Drawings and Specifications, the waterproofing manufacturer's data and other conditions that would affect the quality of this work.
2. Invite other trades whose work will affect, or be affected by the work of this Section.
3. Review typical and atypical details to verify the method of waterproofing system installation and flashing requirements that the Contractor will follow, as well as corrective actions that are required.
4. Special conditions not specifically referenced or addressed by the Project Drawings, manufacturer's typical details, or the Shop Drawings, shall also be identified, reviewed and discussed.
5. Take photographs and notes of unresolved conditions, if any, along with sketches of the same unresolved conditions so that a determination can be made of actions to be taken to assure an installation that will be acceptable watertight and to the waterproofing material manufacturer for issuance of the warranty.
6. Record meeting minutes and distribute copy to all concerned, and the Design Consultant, within 7 days after the meeting.

B. Sequencing/scheduling:

1. Sequence/schedule installation of waterproofing membrane so that it will be covered as soon as possible so as not to be damaged by construction activities and ultraviolet rays.
2. Do not leave waterproofing exposed to the elements longer than recommended by its manufacturer.

1.4 SUBMITTALS

A. Data: Manufacturer Product Data of proposed materials.
B. Shop Drawings: Show locations and extent of waterproofing. Include details for substrate joints and cracks, flashings, corners, and other termination conditions.
C. Samples: 12-inch square Samples of waterproofing membrane and drainage panel.
D. Manufacturer's acceptance: Letter from the manufacturer to verify its acceptance of the applicator and acceptance of substrates as satisfactory to receive this work.
E. Warranty: Sample copies of warranty form.
F. Manufacturer field reports: Reports of field observations, supplemental instructions issued and corrections made during installation.
G. LEED: LEED certification product data as specified in Section 01 81 13, "Sustainable Design Requirements", for the following LEED credits:

Credit MR 4.1 & 4.2, Recycled Content.
Credit MR 5.1, Regional Materials, Manufactured Locally.
Credit MR 5.2, Regional Materials, Harvested / Extracted Locally.
Credit MR 6, Rapidly Renewable Materials.
Credit EQ 4.1, Low Emitting Materials, Adhesives & Sealants.

1.5 QUALITY ASSURANCE

A. Installer qualifications: Firm authorized, approved, or licensed to install products specified and eligible to receive warranty specified.

1.6 HANDLING

A. Store rolled goods on end.

1.7 JOB CONDITIONS

A. Apply waterproofing materials only in dry weather when the outside temperature is above 40-degree F.
B. Do not apply waterproofing materials to damp, wet or frost covered surfaces.

1.8 SPECIAL WARRANTY

A. Submit a joint and several warranty against leakage thru waterproofed surfaces, including against faulty materials and workmanship, for 5 years after installation.
B. Include removal and replacement of materials concealing waterproofing.

PART 2 - PRODUCTS

2.1 PERFORMANCE REQUIREMENTS

A. Provide waterproofing that prevents the passage of water thru waterproofed surfaces.

2.2 WATERPROOFING MEMBRANE

A. "Bituthene 4000" by WR Grace Construction Products (basis of design), "Blueskin WP 200" by Henry, or equal with the following properties:

1. Thickness, ASTM D 3767, Method A: 0.060 inch nominal.
2. Low temperature flexibility, ASTM D1970: Unaffected at -45 degrees F.
3. Resistance to hydrostatic head, ASTM D 5385: 231 feet.
4. Lap adhesion at minimum application temperature ,width, ASTM D 1876, Modified: 5.0 lb/in.
5. Tensile strength, membrane, ASTM D 412 (Die C), modified: 325 psi minimum.
6. Tensile strength, film, ASTM D 882, Modified 5000 psi minimum.
7. Elongation, ultimate failure of rubberized asphalt, ASTM D 412, Modified: 300 percent minimum.
8. Cracking cycling, 100 cycles, ASTM D 836: Unaffected at -25 degrees F.
9. Peel strength, width, ASTM D 903, Modified: 9.0 lb/in.
10. Puncture resistance, membrane, ASTM E 154: 50 lb.
11. Permeance, maximum, ASTM E 96 Water Method: 0.05 perms.
12. Water absorption, 72 hr, ASTM D 570: 0.1 percent maximum.

B. Primer, adhesive, mastic, sealant and other miscellaneous materials: As recommended by the membrane manufacturer for installation of the membrane and the conditions of use.

2.3 ACCESSORIES

A. Drainage panels/protection board: One of the following, unless otherwise recommended by the waterproofing membrane manufacturer.

1. Grace Hydroduct 220 (or 660).
2. Miradrain 6000 by Nicolon/Mirafi Group.
3. J-Drain 300 Composite Drainage System by JDR Enterprises, Inc.
4. Or equal.

B. Other materials: As recommended by the membrane system manufacturer.

PART 3 - EXECUTION

3.1 EXAMINATION/PREPARATION

A. Examine surfaces to be waterproofed.
B. Check that areas to be waterproofed are clean and dry.
C. Fill voids and cracks and remove ridges and fins, leaving a smooth, clean surface.
D. Correct other detrimental conditions before proceeding with installation.

3.2 INSTALLATION

A. Membrane:

1. In accordance with the membrane manufacturer's instructions and the following.

   a. Install the membrane with lapped joints, fused to provide a continuous water barrier.
   b. On walls below grade, install 2 layers of membrane with staggered joints. Install one layer in planters.
   c. Properly seal breaches and penetrations
   d. Roll membrane for complete adhesion to substrate as soon as possible after installation.
   e. Seal membrane edges continuously.

B. Drainage/protection panels: Install in accordance with their manufacturer's instructions and the following.

1. Cover entire membrane with drainage/protection panels.
2. Attach panels to the waterproofing with contact adhesive or tape in accordance with the panel manufacturer's instructions.
3. Remove the bottom 12 inches of the panel below the foundation drain but keep the fabric intact; then wrap the fabric around the drain pipe to provide a continuous path for water to foundation drain/storm drain system
4. Backfill walls as soon as possible after inspection to at least 6 inches above the top edge of the drainage panel.

3.3 CLEANING

A. Remove bituminous and other markings from finished surfaces.
B. Where finished surfaces are soiled by work of this Section, consult manufacturer of surfaces for cleaning advice and complying with their documented instructions.
C. Repair or replace defaced or disfigured finishes caused by work of this Section.

3.4 PROTECTING

A. Use caution to avoid damage to the membrane at all times. In planters do not permit traffic over unprotected or uncovered membrane.
B. Protect membrane as necessary until wearing surfaces are installed or excavation is backfilled.
C. If damage occurs, repair and test to the satisfaction of the City and Design Consultant.

END OF SECTION

SECTION 07 19 16 - WATER-REPELLENT & GRAFFITI CONTROL COATING

PART 1 - GENERAL

1.1 SUMMARY

A. Section includes clear water-repellent and graffiti control coating on exposed, exterior concrete surfaces.
B. Related requirements:

1. Division 01 for LEED requirements.
2. Division 09 for opaque graffiti-resistant coating on plaster.

1.2 SUSTAINABLE DESIGN REFERENCE

A. USG Green Building Council (USGBC).

1.3 ADMINISTRATIVE REQUIREMENTS

A. Pre-installation meeting:

1. Prior to start of installation, arrange a pre-installation meeting between the coating manufacturer, the applicator, and related trades whose work will be in contact with the treated surface, including but not limited to joint sealers, windows and doors.
2. Record minutes of the meeting, file in the Project file, and send a copy to the Design Consultant.

1.4 SUBMITTALS

A. Data: Manufacturer Product Data of the proposed coating, including recommended coverage rates, include material test reports indicating and interpreting test results for compliance of coating with criteria specified.
B. Samples: Coating applied to cast-in-place concrete sample panel where designated by the Design Consultant at the site.
C. Coating manufacturer certifications:

1. Letter from the coating manufacturer to verify its acceptance of the applicator and acceptance of substrates as satisfactory to receive coating.
2. Duplicate copies of manufacturer affidavit with each shipment of materials delivered to the jobsite certifying that material furnished complies with specified requirements.

D. LEED: LEED certification product data as specified in Section 01 81 13, “Sustainable Design Requirements”, for the following LEED credits:

1. Credit MR 4.1 & 4.2, Recycled Content.
2. Credit MR 5.1, Regional Materials, Manufactured Locally.
3. Credit MR 5.2, Regional Materials, Harvested / Extracted Locally.
4. Credit MR 6, Rapidly Renewable Materials.
5. Credit EQ 4.1, Low Emitting Materials, Paints.

E. Closeout: Furnish the City a one gallon container of the following.

1. ProSoCo Defacer Eraser Graffiti Wipes.
2. ProSoCo Enviro Klean SafStrip (Gelled graffiti removal product.)
3. Or equivalent products if another manufacturer’s product is applied.

1.5 QUALITY ASSURANCE

A. Pre-installation Samples: When requested by the coating manufacturer, or necessary to adjust coating formulation, provide coating manufacturer with sufficient Samples of substrate to be coated to determine exact formulation and coverage rates.

B. Manufacturer's inspections: Obtain materials only from manufacturer who will send a qualified technical representative to the Project site for the following.

1. Before start of this work to verify substrate acceptability, and as required thereafter to review installation procedures and completed work, and to issue warranty specified.
2. Unsatisfactory conditions disclosed by the manufacturer's visits to the site shall be promptly and satisfactorily repaired and the areas reinspected by the manufacturer before work starts or resumes in affected areas.

C. Mockup:

1. Apply coating to the left half of the concrete mockup specified in Division 03; identify the coated side.
2. Do not proceed with application at the site until the Design Consultant's approval of the coated mockup is obtained and test results are satisfactory.

D. Pre-installation testing:

1. Test mockup by demonstrating removal of graffiti in the presence of the City designated representative.
2. Report results of test and apply additional coating, when appearance is unchanged, or re-formulate and re-apply coating, when test results are not satisfactory.

1.6 JOB CONDITIONS

A. Comply with manufacturer recommendations regarding environmental requirements, and temperature and conditions of surfaces to receive coating.

1.7 SPECIAL WARRANTY

A. Warrant coating against water penetration through treated surfaces, peeling, cracking, discoloration and other defects of the coating, caused by faulty materials and workmanship, for 5 years after Substantial Completion.

B. The warranty shall include repair of defects and failures in the coating during the warranty period, at no additional cost to the City.

C. Warranty does not include deterioration or failure of coating due to failure of substrate, formation of new joints and cracks in excess of 1/16-inch wide, fire, vandalism, or abuse by maintenance equipment.

1.8 MAINTENANCE

A. With closeout submittals, deliver one identified unopened 5 one-gallon container of of cleaner to be used for graffiti removal, to the City. Identify with area and material for future identification.

B. Provide the City copy of instructions for graffiti removal and maintenance recommendations.

PART 2 - PRODUCTS

2.1 PERFORMANCE REQUIREMENTS

A. Provide water repellents with the following properties based on testing manufacturer's standard products, according to test methods indicated, applied to substrates simulating Project conditions using same materials and application methods to be used for Project.

1. Absorption: Minimum 90 percent reduction of absorption after 24 hours in comparison of treated and untreated specimens.
2. Hardened concrete: ASTM C 642.
3. Water-vapor transmission: Maximum 10 percent reduction in rate of vapor transmission in comparison of treated and untreated specimens, ASTM E 96.
4. Water penetration and leakage through masonry: Maximum 90 percent reduction in leakage rate in comparison of treated and untreated specimens, ASTM E 514.
5. Durability: Maximum 5 percent loss of water repellency after 2500 hours of weathering in comparison to specimens before weathering, ASTM G 53.
6. Permeability: Minimum 80 percent breathable in comparison of treated and untreated specimens, ASTM D 1653.

B. Appearance: When compared visually to an untreated sample under same lighting conditions, the coating shall not change the color and sheen of the coated substrate, and shall be invisible after application and over the life of the building.

2.2 COATING/MANUFACTURER

A. ProSoCo “Blok-Guard & Graffiti-Control” (basis of design).
~~B.Tnemec “626 Dur-A-Pell”~~
B. Or equal by the following:

1. BSAF.
2. Harris Specialty Chemicals, Inc.
3. Pecora Corp.
4. Sivento.
5. Tnemec,
~~5.~~6. Or equal.

2.3 MISCELLANEOUS MATERIALS

A. ProSoCo Defacer Eraser Graffiti Wipes.
B. ProSoCo Enviro Klean SafStrip (Gelled graffiti removal product.)
C. Or equal.

PART 3 - EXECUTION

3.1 EXAMINATION/PREPARATION

A. Verify that surfaces to be coated are clean, dry and free of dust, dirt, oil, grease and other foreign material which would affect the application and performance of the coating.
B. Correct detrimental conditions before proceeding with installation.

3.2 PROTECTION

A. Protect adjoining work, including sealant bond surfaces, from spillage or blow-over of coating.
B. Cover adjoining and nearby surfaces where there is a possibility of coating being deposited on these surfaces.

3.3 PHASING

A. Where feasible delay coating application until installation of sealants is completed in joints of adjoining surfaces to be coated.
B. Coating may precede sealant application only if sealant adhesion and compatibility have been tested and verified using substrate, coating, and sealant materials identical to those used in the work.

3.4 APPLICATION

A. Test application:

1. Before performing work of this Section, including bulk purchase and delivery of products, prepare a small application in an unobtrusive location and in a manner approved by Design Consultant to demonstrate the final effect (visual, physical, and chemical) of planned application.
2. Proceed with work only after Design Consultant review of test application.

B. Apply coating by manufacturer approved applicators using recommended methods and equipment, uniformly on all above grade exposed formed concrete surfaces.

1. Do not allow coating to puddle or build-up.
2. Do not exceed the application rate recommended by the manufacturer.

3.5 FIELD QUALITY CONTROL

A. Provide services of a factory-authorized technical service representative, from the coating manufacturer, to inspect and approve the substrates before application and to instruct the applicator on the product and application method to be used.
B. The City may employ a testing agency to test the in-place coating in compliance with ASTM standards specified.
C. Cost of test will be paid by the City, except, should the test disclose that the coating tested does not comply with these Specifications, the cost of the test and subsequent retests shall be paid by the Contractor.
D. In the event test shows that the coating is deficient, apply additional coating.
E. Repetition of the above procedure on all previously treated surfaces will be at Contractor's expense.

3.6 CLEANING

A. Clean coating from adjoining and nearby surfaces immediately after spillage.
B. Comply with manufacturer’s recommendations for cleaning.

END OF SECTION

SECTION 07 21 00 - THERMAL BUILDING INSULATION

PART 1 - GENERAL

1.1 SUMMARY

A. Section includes ~~thermal insulation at locations specified in Article 1.3 below and the following~~.

B. termal insulation for the building envelope to provide the thermal resistance (R value) indicated to limit building thermal gains and losses. Provide insulation for the following locations.

1. Building envelope.
2. Exterior soffits of air-conditioned spaces.

C. Exclusions: Insulation is not required at parapets, and openings in walls, including louvers, vision glass and doors.

~~B.~~D. Related requirements:

1. Division 01 for LEED requirements.
2. Division 07 for firestopping.
3. Division 07 for insulation in roof hatch.
4. Division 09 for acoustical insulation.
5. Division 22 for pipe and duct insulation.

1.2 SUSTAINABLE DESIGN REFERENCE

A. USG Green Building Council (USGBC).

1.3 ADMINISTRATIVE REQUIREMENTS

A. Scheduling and sequencing: Schedule installation of insulation so that it will remain exposed to the elements for the shortest time possible.

~~1.4 DEFINITIONS~~

~~A. Thermal insulation: Provide insulation for the building envelope to provide the thermal resistance (R value) indicated to limit building thermal gains and losses. Provide insulation for the following locations.~~

~~1. Building envelope excluding roof insulation specified elsewhere.~~
~~2. Exterior soffits of air-conditioned spaces.~~

~~B. Exclusions: Insulation is not required at parapets, and openings in walls, including louvers, vision glass and doors.~~

1.4 SUBMITTALS

A. Data: Manufacturer Product Data for materials specified.

B. Samples:

1. Of each type of insulation, 24 inches square Samples.
2. Impaling pins, full size.
3. Twelve inches long Samples of tape.

C. Test reports: For each product submit based on evaluation of comprehensive tests performed by a qualified testing agency that products conform to requirements of authorities having jurisdiction.
D. LEED: LEED certification product data as specified in Section 01 81 13, “Sustainable Design Requirements”, for the following LEED credits:

1. Credit MR 4.1 & 4.2, Recycled Content.
2. Credit MR 5.1, Regional Materials, Manufactured Locally.
3. Credit MR 5.2, Regional Materials, Harvested / Extracted Locally.
4. Credit MR 6, Rapidly Renewable Materials.
5. Credit EQ 4.1, Low Emitting Materials, Adhesives & Sealants.

1.5 QUALITY ASSURANCE

A. Surface-burning characteristics: As determined by testing identical products according to ASTM E 84 by a qualified testing agency. Identify products with appropriate markings of applicable testing agency.
B. Certification: All insulation materials shall conform to requirements of Title 24 CCR, Section 531.1(a), and materials shall be installed to meet flame spread rating and other requirements of Section 531.1(b).

1.6 HANDLING

A. Packaging: In unopened containers and packages with labels bearing producer(s) name and source of product, date of manufacture, with UL classification on package, and R value.
B. Storage:

1. Keep insulation protected while stored; keep dry during application.
2. Outdoors, store off ground on pallets, protected with breathing type covers.
3. Insulation shall be dry when installed.
4. Remove insulation that becomes wet or damp immediately from the job site.

1.7 ENVIRONMENTAL REQUIREMENTS

A. Install insulation in dry weather, unless building is enclosed and watertight.
B. If insulation will be exposed to the elements after installation, cover with waterproof membrane each day; do not enclose wet insulation.

PART 2 - PRODUCTS

2.1 MANUFACTURERS

A. Fiber glass insulation:

1. Owens Corning.
2. CertainTeed.
3. Knauf Insulation.
4. Johns Manville.
5. Or equal.

B. Mineral wool insulation:

1. Roxul.
2. Thermafiber.

3. Partek Insulations, Inc.
4. Rock Wool Manufacturing Co.
5. Fibrex Insulation, Inc.
6. Industrial Insulation Group, LLC.
7. Or equal.

2.2 PERFORMANCE/DESIGN CRITERIA

A. Comply with these Specifications for the thermal resistance, and to the Drawings for maximum or minimum thickness of insulation required.

1. Select appropriate products from list of materials to provide thermal value of envelope, compatibility when incorporated into finished system while ensuring substrate conditions as well as their ability to adhere components permanently, where applicable in rigid manner and maintain flexibility where required in finished work.
2. Provide insulation materials and their facings that do not support fungal growth when tested in accordance with ASTM C1338.

2.3 INSULATION

A. Thermal resistance (“R” value): Minimum of 11, except as noted.
B. Sprayed foam sealant: Fire-rated polyurethane foam insulation meeting ASTM E 84, one- or 2-component, foamed-in-place, polyurethane foam sealant, 1.5 to 2.0 pcf density; flame spread index of 25 or less according to ASTM E 162; with primer and noncorrosive substrate cleaner recommended by foam sealant manufacturer.

1. Dow.
2. Tiger Foam Insulation.
3. Fomo Products, Inc.
4. Or equal.

C. At all other locations:

1. Type: Glass fiber or mineral wool batt or blanket insulation complying with ASTM C 665, Type III, Class A, flame spread (FSK) 25 or less, formaldehyde-free by Johns Manville, Knauf, or equal.
2. Width: Batt width shall match the stud spacing and be provided with nailing flanges~~sized for a friction-fit to be self-supporting~~.

2.4 INSTALLATION MATERIALS

~~A.Impaling pins and clips: Cemco 1500 Series, Tactoo Insul-Hangers Series T by AGM Industries, Inc. or equal by Eckel Industries, Inc., of appropriate length required for insulation thickness used.~~

A. Supports for between rafters insulation: 13-gage steel, IS16 and IS24 (depending on wood framing spacing) by Silver Metal Products, Inc., Southeastern Wire, Moore Products, or equal.

~~C. Adhesive used with impaling pins shall be made, or approved by the clip manufacturer. Do not use "peel and press" hangers with self-adhesive back.~~

B. Staples, zinc-coated wires and other devices for fastening insulation: As recommended by the insulation manufacturer.
C. Insulation tape:

1. Polyethylene Adhesive Tape: “Scotch brand No. 483” by 3M, or equal.

2. Foil Vapor Barrier Tape:

   a. Pressure sensitive aluminum foil tape, 2 mils thick, 3-inch wide, “Scotch brand No. 425" by 3M.
   b. “Dead Soft Aluminum Foil Tape” by Hanson Ltd.
   c. “FSK Copolymer” by Compac Corp.
   d. “General Purpose FSK Facing Tape” by Venture Tape.
   e. Or equal FSK-faced cold weather tape.

PART 3 - EXECUTION

3.1 EXAMINATION/PREPARATION

A. Examine conditions and measurements affecting the work of this Section at site.
B. Correct detrimental conditions before proceeding with installation.
C. Before installing insulation in stud walls, thoroughly vacuum space clean of dust and debris. Also clean spandrel cavities in the same manner.

3.2 INSTALLATION

A. Install insulation where shown and specified. Cut to fit irregular spaces, butt edges into firm contact with each other and adjoining surfaces.

   1. Use foam insulation for small spaces that are difficult to insulate otherwise. Fill space completely and trim insulation flush with face of wall when cured. Use batt or blanket insulation at all other locations.
   2. Hand pack around pipes, ducts, conduits, electrical boxes, and other penetrations as required to thoroughly fill all voids and spaces between framing members and to form a continuous thermal barrier.
   3. Do not compress insulation more than 10 percent.
   4. Where door and window frames occur in insulated assemblies, cut additional strips of insulation and hand-pack to fill all voids in and around the frames or use foam insulation.
   5. Insulate boxed headers and studs in exterior walls.
   6. Comply with the National Electrical Code (NEC) for installation in proximity to light fixtures. Do not install insulation closer than recommended by NEC.
   7. Where in-wall electrical conduit is parallel to the wall, slit the insulation halfway to bury the conduit in it. Where the conduit is perpendicular to the wall, do not oversize the penetration; tape the conduit to prevent heat leakage.
   8. Install foil-faced insulation with foil facing the building interior.

~~B. Attach insulation to solid surfaces as follows:~~

   ~~1. Provide insulation fasteners at typical spacing specified, or equivalent area for panels of a different size and for any cut panel sizes, except not less than 2 fasteners for any single piece.~~
   ~~2. Lay out panels for minimum of joints, and with any single piece not less than 24 inches wide or less than 48 inches long, unless otherwise approved.~~
   ~~3. Offset intermediate end joints in adjacent panels not less than 48 inches.~~
   ~~4. For 48-inch wide units follow insulation manufacturer's instructions. Provide a minimum of 8 fasteners. Space edge fasteners no more than 3-inch from edges.~~
   ~~5. For 24-inch wide units, comply with the above, except use no less than 6 fasteners.~~
   ~~6. Secure each metal clip base in full bed of adhesive as recommended by their manufacturer.~~

7. ~~Do not install panels until clip adhesive is fully set.~~
8. ~~Cut panels in straight lines using tools which minimize fraying. Neatly and carefully precut small slots through panels to facilitate placing insulation over fasteners.~~
9. ~~Install panels fully bearing against substrates, and neatly and tightly fitted at joints and around surfaces of penetrations.~~
10. ~~Install fastener caps firmly against panel faces and without compressing insulation, and turn clip prongs or steps flat against caps.~~

B. Staple or nail flanges of insulation ~~Where insulation~~ in stud walls at 12 inches o.c. to prevent sagging~~is not self-supporting, hold it in place with wires spaced not more than 16 inches o.c. horizontally or by other methods acceptable to the Design Consultant~~.

C. Between rafters, support insulation with insulation supports spaced at 16 inches o.c. maximum.

D. After installation is complete, tape penetrations and ruptures in insulation facing and tape joints between batts continuously.

3.3 FIELD QUALITY CONTROL

A. Prior to closing-in of insulated assemblies, or prior to Substantial Completion for insulation that will remain exposed in the building, refit, reinstall and/or replace wet, damaged and displaced insulation.

END OF SECTION

SECTION 07 27 26 - FLUID-APPLIED AIR & WATER BARRIER

PART 1 - GENERAL

1.1 SUMMARY

A. Section includes:

1. Fluid-applied, vapor permeable air and water barrier membrane system (A&WB) on above-grade exterior wall surfaces, except where doors and glazed assemblies occur.
2. Bridging and sealing air leakage pathways at roof and foundation junctions, window and door openings, control and expansion joints, piping and other penetrations through the wall assemblies.

B. Related requirements:

1. Division 01 for LEED requirements.
2. Division 06 for plywood sheathing.
3. Other Sections of Division 07 for the following:

   a. Membrane roofing.
   b. Sheet metal flashing and trim.
   c. Joint sealants.

1.2 DEFINITIONS

A. WFT: Wet film thickness.
A. DFT: Dry film thickness.

1.3 SUSTAINABLE DESIGN REFERENCE

A. USG Green Building Council (USGBC).

1.4 ADMINISTRATIVE REQUIREMENTS

A. Scheduling and sequencing: Schedule the work of this Section so the A&WB exposure to the elements is kept to a minimum and does not exceed time period recommended by its manufacturer.

B. Coordination:

1. Notify concerned trades of items required to be incorporated into work of separate Sections. Certain components specified under this Section include items which are closely integrated with A&WB transitions, entrances, glazed assemblies, glazing components, flashing pieces and architectural metalwork specified in other Sections and consequently require close coordination with such allied trades. Perform coordination required to ensure correct installation procedures and results.
2. Coordinate and cooperate with other trades and determine where and when phased installation of A&WB will be necessary as well as its extent; document in writing and have all affected trades sign the document before submitting one copy to the Design Consultant.

C. Pre-installation meeting: Hold pre-installation conference at the site prior to commencement of field operations to establish procedures to maintain optimum working conditions and to coordinate this work with related and adjacent work. Pre-installation conference shall include the Contractor, installer, Design Consultant, and system manufacturer's field representative. Agenda for meeting shall include but not be limited to the following.

1. Review of submittals.
2. Review of surface preparation, minimum curing period and installation procedures.
3. Review of special details and flashings.
4. Sequence of construction, responsibilities and schedule for subsequent operations.
5. Review of mockup requirements.
6. Review of inspection, testing, protection and repair procedures.

1.5 SUBMITTALS

A. Data: Manufacturer Product Data for each type of material. Including the following.

1. Application instructions.
2. Instructions for evaluating, preparing, and treating substrates.
3. Temperature and other limitations of installation conditions.
4. Technical data and tested physical and performance properties.
5. Certification of compatibility, listing all materials on the Project that the specified materials come in contact with.

B. Shop drawings: Large scale, dimensioned shop drawings specific to the Project to supplement manufacturer data. Show the following.

1. Locations and extent of A&WB.
2. Details of typical and atypical conditions.
3. Intersections with other envelope systems and materials.
4. Membrane counterflashings.
5. Details showing bridging of gaps in the construction, treatment of inside and outside corners and sealing of miscellaneous penetrations.
6. Test results:

a. Air permeability testing of primary A&WB material in accordance with ASTM E 2178.
b. ABAA test protocol for the A&WB system.

C. Samples: Minimum 6-inch square of each A&WB Sample material required for the Project.
D. Installer qualifications: Written approval from the A&WB manufacturer that the applicator of the system is qualified for the work of this Section.
E. Certification: From an approved independent testing laboratory certifying that the air leakage rates of the membrane, including primary membrane and transition sheets, does not exceed the requirements of the Massachusetts Energy Code.
F. Warranty: Sample copies of warranty for assembly to be furnished under this Section, clearly defining terms, conditions, and time periods for the warranty.
G. Letter of acceptance: From the manufacturer to verify its acceptance of the applicator and acceptance of substrates as satisfactory to receive this work.
H. LEED: LEED certification product data as specified in Section 01 81 13, “Sustainable Design Requirements”, for the following LEED credits:

1. Credit MR 4.1 & 4.2, Recycled Content.
2. Credit MR 5.1, Regional Materials, Manufactured Locally.
3. Credit MR 5.2, Regional Materials, Harvested / Extracted Locally.
4. Credit MR 6, Rapidly Renewable Materials.
5. Credit EQ 4.1, Low Emitting Materials, Adhesives & Sealants.

1.6 QUALITY ASSURANCE

A. Source limitation: Obtain primary A&WB material and through wall flashing through one source from a single manufacturer.
B. Applicator qualifications: Firm experienced in applying barrier materials similar in material, design, and extent to those indicated for this Project, whose work has resulted in applications with a record of successful in-service performance.
C. Mockup: Before starting work of this Section, provide barrier work for exterior wall assembly mockup specified elsewhere, incorporating backup wall construction, external cladding, window, door frame and sill, insulation, and flashing to demonstrate surface preparation, crack and joint treatment, and sealing of gaps, terminations, and penetrations of barrier membrane.

1. Coordinate construction of mockup to permit inspection by City's testing agency of barrier before external insulation and cladding is installed.
2. If Design Consultant determines mockup does not comply with requirements, reconstruct mockup(s) and re-apply barrier until mockup is approved.
3. Accepted mockup may remain a part of the work when properly identified and protected.

1.7 HANDLING

A. Deliver materials and products in labeled packages.
B. Store and handle in compliance with their manufacturer’s instructions and recommendations.
C. Protect from damage from sunlight, weather, excessive temperatures and construction operations.
D. Remove damaged material from the site.

1.8 PROJECT CONDITIONS

A. Apply A&WB within the range of ambient and substrate temperatures recommended by barrier manufacturer.
B. Protect substrates from environmental conditions that affect performance of air and water barrier.
C. Do not apply A&WB to a wet substrate or during rain, fog, or mist.

1.9 SPECIAL WARRANTIES

A. Special warranties: Provide the following warranties for 5 years after Substantial Completion.

1. Material warranty: Manufacturer standard form in which manufacturer agrees to replace fluid-applied barrier membrane materials that fail within specified warranty period when installed and used in conformance with manufacturer's instructions.
2. Workmanship warranty: Installer warranty, in form acceptable to the City, agreeing to replace fluid-applied barrier membrane that fail within specified warranty period when installed and used in conformance with manufacturer's instructions.
3. Failures include, but are not limited to, the following:

a. Failure to remain watertight.
b. Failure to maintain air permeance rating not to exceed 0.004 cfm/square foot when tested per ASTM E 2178, within specified warranty period.
c. Failure to maintain a vapor permeance rating greater than 10 perms when tested in accordance with ATM E 96, Method B.

PART 2 - PRODUCTS

2.1 PERFORMANCE REQUIREMENTS

A. Physical and performance properties: Provide products with the following minimum properties.

1. Air permeance: Not to exceed 0.0004 cfm/square foot (at specified thickness) at 1.57-lbf/square foot pressure difference of surface area when applied to CMU wall; when tested per ASTM E 2178.
2. Membrane vapor permeance: Not less than 11.2 perms when tested per ASTM E 96.
3. Water resistance: Watertight when tested at the same pressure as for air permeance above.
4. Assembly performance: Provide a continuous air and water barrier assembly that has an air leakage not to exceed 0.0008 cfm/square foot of surface area under a pressure differential of 0.3-inch water (1.57 pounds per square foot) when tested in accordance with ASTM E 2357.
5. UV exposure limit: Not more than 180 calendar days per ASTM D 412 and ASTM E 96 Method B.
6. Property Typical Value Test Method

Air permeance at 1.57 psf (75 Pa) difference	<0.0002 cfm/ft2 (<0.001 L/s/m2)	ASTM E 2178 pressure
Assembly air permeance at 1.57 psf (75 Pa) difference	<0.0008 cfm/ft2 (<0.004 L/s/m2)	ASTM E 2357 pressure
Water vapor permeance	0.08 Perms (4.6 ng/Pa.s.m2)	ASTM E 96—method B
Water vapor permeance after aging2	0.033 Perms (1.9 ng/Pa.s.m2)	CAN/CGSB-51.33-89
Pull adhesion to concrete block (CMU)	35 psi (0.24 N/mm2)	ASTM D4541
Pull adhesion to glass faced wall board	18 psi (0.12 N/mm2) (pulls board apart)	ASTM D4541
Peel adhesion to concrete	5 lbs/in. (880 N/m)	ASTM D903 modified
Elongation	500 percent	ASTM D413
Pliability, 180° bend over 1-inch (25 mm) mandrel at -23°F (-30°C)	Unaffected	ASTM D1970
Low temperature flexibility and crack bridging 1⁄8-inch (3.2 mm) crack cycling at -15°F (-26°C)	Pass	ASTM C836
Extensibility over 1⁄4-inch (6.4 mm) crack aging	Pass	ASTM C836 after heat
Solids content	100 percent	ASTM D1644

2.2 AIR AND WATER BARRIER MANUFACTURER/TYPE

A. Type/manufacturer: Single component, fluid-applied, fully-adhered, vapor-permeable air and water acrylic membrane. Provide one of the following.

1. Perm-A-Barrier VP by Grace Construction Products (basis of design),
2. Perm-A-Barrier® VPO (black) by Grace Construction Products (basis of design),
3. Henry Air Bloc 33 UV-resistant.
4. Or equal.

2.3 AUXILIARY MATERIALS

A. General: Auxiliary materials recommended by air and water barrier manufacturer for intended use and compatible with air and water barrier membrane. Liquid-type auxiliary materials shall comply with VOC limits of authorities having jurisdiction.
B. Liquid membrane for details and terminations: Bituthene Liquid Membrane.

C. Wall primer (for use with through-wall flashing and tapes applied to substrate): Liquid waterborne primer recommended for substrate by manufacturer of air and water barrier material.

1. Flash point: No flash to boiling point.
2. Solvent type: Water.
3. VOC content: Not to exceed 10 g/l.
4. Application temperature: Minus 25-degree F and above.
5. Freezing point (as packaged): Minus 7-degree F.
6. Product: Perm-A-Barrier WB Primer.

D. Flexible membrane wall flashing: 0.8 mm of self-adhesive rubberized asphalt integrally bonded to 0.2 mm of cross-laminated, high-density polyethylene film to provide a min. 1.0 mm thick membrane. Membrane shall be interleaved with disposable silicone-coated release paper until installed, conforming with the following.

1. Water vapor transmission ASTM E 96, Method B: 0.05 perms maximum.
2. Water absorption ASTM D570: Maximum 0.1 percent by weight.
3. Puncture resistance ASTM E 154: 80 lb. minimum.
4. Tear resistance:

    a. Initiation ASTM D 1004: Minimum 13 lb M.D.
    b. Propagation ASTM D 1938: Minimum 9 lb. M.D.

5. Lap adhesion at minus 25-degree F, ASTM D 1876: 5 lb./inch of width.
6. Low temperature flexibility ASTM D1970: Unaffected to minus 45-degree F.
7. Tensile strength: ASTM D 412, Die C Modified: Minimum 800 psi.
8. Elongation, ultimate failure of rubberized asphalt ASTM D 412, Die C: Minimum 200 percent.
9. Product: Perm-A-Barrier Wall Flashing.

E. Joint reinforcing strip: Air and water barrier manufacturer approved tape.

F. Transition membrane: 32 mils of self-adhesive rubberized asphalt integrally bonded to 8-mil of cross-laminated, high-density polyethylene film to provide a minimum 40-mil thick membrane. Membrane shall be interleaved with disposable silicone-coated release paper until installed, conforming to the following:

1. Water vapor transmission ASTM E 96, Method B: 0.05 perms maximum.
2. Water absorption ASTM D 570: Maximum 0.1 percent by weight.
3. Puncture resistance ASTM E 154: 80 lb. minimum.
4. Tear resistance:

    a. Initiation ASTM D 1004: Minimum 13 lb. M.D.
    b. Propagation ASTM D 1938: Minimum 9 lb. M.D.

5. Lap adhesion at 25-degree F: ASTM D 1876: 5 lb./inch of width
6. Low temperature flexibility ASTM D 1970: Unaffected to minus 45-degree F.
7. Tensile strength ASTM D 412, Die C Modified: Minimum 800 psi.
8. Elongation, ultimate failure of rubberized asphalt ASTM D 412, Die C: Minimum 200 percent.
9. Product: Perm-A-Barrier Wall Flashing manufactured by Grace Construction Products.

G. Substrate patching membrane: Bituthene Liquid Membrane manufacturer standard trowel-grade substrate filler.

H. Sprayed polyurethane foam sealant: One- or 2-component, foamed-in-place, polyurethane foam sealant, 1.5 to 2.0 lb/cubic foot density; flame spread index of 25 or less according to ASTM E 162; with primer and noncorrosive substrate cleaner recommended by foam sealant manufacturer.

I. Joint sealant ASTM C 920, single-component, neutral-curing silicone; Class 100/50 (low-modulus), Grade NS, Use NT related to exposure, and, as applicable to joint substrates indicated, Use O.

PART 3 - EXECUTION

3.1 EXAMINATION

A. Examine substrates, areas, and conditions for compliance with manufacturer's recommendations and other conditions affecting performance.

1. Verify that substrates are sound and free of oil, grease, dirt, excess mortar, or other contaminants.
2. Verify that concrete has cured and aged for minimum time period recommended by barrier manufacturer.
3. Verify that concrete is visibly dry and free of moisture. Test for capillary moisture by plastic sheet method according to ASTM D 4263.

B. Correct detrimental conditions before proceeding with installation.

3.2 SURFACE PREPARATION

A. General:

1. Comply with the A&WB manufacturer's requirements for preparation of substrates.
2. Surfaces shall be sound and free of voids and sharp protrusions.
3. Remove contaminants such as grease, oil and wax from exposed surfaces.
4. Remove dust, dirt, and debris.
5. Use repair materials and methods that are acceptable to manufacturer of the A&WB system.
6. Provide clean, dust-free, and dry substrate for barrier application.
7. Mask adjoining surfaces not covered by A&WB to prevent spillage and overspray affecting other construction.

~~B.Gypsum sheathing panels:~~

~~1.Verify that the boards are sufficiently stabilized with corners and edges fastened.~~
~~2.Pre-treat board joints with 2 to 3 inches wide manufacturer's recommended self-adhesive tape.~~
~~3.Fill gaps greater than 1/4 inch wide with mastic or calk, allowing sufficient time to fully cure before taping.~~
~~4.Tape joint prior to installing fluid barrier membrane.~~

B. Plywood sheathing:

1. Treat construction joints and install flashing as recommended by manufacturer.
2. At changes in substrate plane, apply sealant or Bituthene Liquid Membrane at sharp corners and edges to form a smooth transition from one plane to another.
3. Cover gaps in substrate and form a smooth transition from one substrate plane to another with stainless-steel sheet mechanically fastened to structural framing to provide continuous support for the barrier.

3.3 BARRIER MEMBRANE

A. Apply barrier membrane to achieve a continuous barrier according to its manufacturer's instructions, within manufacturer's recommended application temperature ranges.
B. Apply a continuous unbroken barrier to substrates, 90-mil WFMT to result in a minimum DFT of 45-mil.

3.4 TRANSITION MEMBRANE

A. Install strips, transition membrane, and auxiliary materials according to the barrier manufacturer's instructions to form a seal with adjacent construction and to maintain a continuous air and water membrane.

1. Coordinate the installation of the barrier with installation of roofing membrane and base flashing to ensure continuity of barrier with roofing membrane.
2. Install strip on roofing membrane or base flashing so that a minimum of 3 inches of coverage is achieved on both substrates.
3. Install flashings only after application of A&WB.

B. Apply primer to substrates to receive transition membrane at required rate and allow to dry. Limit priming to areas that will be covered by transition tape in same day. Reprime areas exposed for more than 24 hours.

~~1.Prime gypsum sheathing not covered with air membrane material with number of prime coats needed to achieve required bond, with adequate drying time between coats.~~

C. Connect and seal A&WB continuously to roofing membrane air and water barrier, floor-to floor construction, exterior glazed assemblies, door framing, and other assemblies in exterior wall openings, using accessory materials.
D. At end of each working day, seal top edge of strips and transition strips to substrate with termination mastic.
E. Apply joint sealants forming part of barrier assembly within manufacturer's recommended application temperature ranges. Consult manufacturer when sealant cannot be applied within these temperature ranges.
F. Prime concealed perimeter frame surfaces of exterior glazed assemblies and doors. Apply transition strip so that a minimum of 3-inch of coverage is achieved over both substrates. Maintain 3 inches of full contact over firm bearing to perimeter frames with not less than one-inch of full contact.
G. Roll transition membrane firmly to enhance adhesion.
H. Fill gaps in perimeter frame surfaces of glazed assemblies, doors, and miscellaneous penetrations of barrier membrane completely with foam sealant.
I. Repair punctures, voids, and deficient lapped seams in strips and transition strips. Slit and flatten fishmouths and blisters. Patch with transition strips extending 6 inches beyond repaired areas in strip direction.

3.5 FIELD QUALITY CONTROL

A. Testing agency: City may engage a qualified testing agency to perform tests and inspections and prepare test reports.
B. Inspections: Barrier materials and installation are subject to inspection for compliance with requirements. Inspections may include the following.

1. Continuity of barrier system is achieved throughout the building envelope with no gaps or holes.
2. Continuous structural support of barrier system is provided.

3. Site conditions for application temperature and dryness of substrates have been maintained.
4. Maximum exposure time of materials to UV deterioration is not exceeded.
5. Surfaces have been primed, if applicable.
6. Laps in strips and transition strips comply with minimum requirements and are shingled in the correct direction (or mastic is applied on exposed edges), with no fishmouths.
7. Termination mastic is applied on cut edges.
8. Strips and transition strips are firmly adhered to substrate.
9. Compatible materials have been used.
10. Transitions at changes in direction and structural support at gaps are provided.
11. Connections between assemblies (membrane and sealants) comply with requirements for cleanliness, preparation and priming of surfaces, structural support, integrity, and continuity of seal.
12. All penetrations are sealed.

C. Tests: Testing may be performed and will be determined by City's testing agency for evidence of air leakage according to ASTM E 1186, smoke pencil with pressurization or depressurization.

D. Deficiencies:

1. Do not cover barrier until it is tested and inspected by City's testing agency, unless City decides not to have tests performed in which case cover barrier after work is reviewed and found acceptable.
2. Correct deficiencies in or remove barrier components that do not comply with specified requirements; repair substrates and reapply.

3.6 CLEANING/PROTECTING

A. Protect barrier system from damage during application and remainder of construction period, according to its manufacturer's instructions.

B. Protect barrier from exposure to UV light and harmful weather exposure as required by manufacturer. Remove and replace barrier exposed to UV for more than 150 days.

C. Clean spills, stains, and soiling from construction that would be exposed in the completed work using cleaning agents and procedures recommended by manufacturer of affected construction.

D. Remove masking materials after installation.

END OF SECTION

SECTION 07 42 00 - PREFORMED WALL PANELS

PART 1 - GENERAL

1.1 SUMMARY

A. Section includes:

1. Preformed wall~~, fascia, soffit and ceiling~~ panels, their support system, special shapes, and all other panels elements for the building.
2. Cladding contiguous steel doors with metal panels.
3. The work of this Section requires deferred approval; it is design/build.

B. Related requirements:

1. Division 01 for LEED requirements..
2. Division 07 for the following:
   a. Insulation.
   b. Other flashing and sheet metal.
   c. Air/water barrier.
   d. Sealants.
3. Division 08 for glazed assemblies adjacent to the panels.

1.2 SUSTAINABLE DESIGN REFERENCE

A. USG Green Building Council (USGBC).

1.3 SYSTEMS DESCRIPTION

A. General: Single-skin concealed fastener metal wall panel systems applied as exterior components of an insulated wall system.

1.4 ADMINISTRATIVE REQUIREMENTS

A. Engineering responsibilities: Design Build/Delegated Design.

1. The work of this Section requires deferred approval. It is not fully detailed on the Drawings which indicate desired profile and design intent, and it has not been engineered.
2. The Contractor is responsible for engineering, fabrication and installation to withstand loads and other criteria prescribed by Code, indicated, or specified, within the physical limitations indicated on the Drawings.
3. A California-licensed professional engineer employed by the Contractor shall prepare drawings and calculations for this work. Drawings and calculations, as specified above, shall be sealed and signed by the Contractor's design engineer.
4. Fasteners and connections where indicated are shown schematically.
   a. Fasteners or connections shall not conflict with or require revision of the finish profiles of the panels and the supporting work.
   b. Connections to the primary supports shall not impose eccentric loading, or induce twisting or warping.
   c. Connections to the primary supports shall be able to accommodate misalignment of the structure within limits allowed by the tolerances specified.

1.5 SUBMITTALS

A. Shop Drawings: Dimensioned Shop Drawings for the preformed panel system, including design and detailing of the panel support framing elements and their attachment to the structural frame. Coordinate Drawings and their submittal with other adjacent exterior wall components.

1. Show in detail the panel layout on each plane, support framing system, panel attachment members, jointing, dimensions, sizes and locations of cut-outs, relation to work of other trades, and other pertinent data and information.
2. Indicate and dimension adjoining, abutting and penetrating work, to be performed by other trades.
3. Number each panel to correspond to the markings shown on the fabrication/shop drawings. Mark the identification number on the back of each panel.
4. The Shop Drawings and calculations shall bear the seal of a California-registered professional engineer. The engineer shall also perform and submit structural calculations to document all panel conditions.

B. Samples:

1. Prior to fabrication, submit preliminary Samples of panels showing corners, special shapes, or other conditions, all finished as specified.
2. Samples will serve as the control for limiting acceptable range of appearance.

C. Data:

1. Manufacturer product data sheet or equivalent printed literature indicating product information for panel anchorages, setting accessories and other related materials.
2. Data shall substantiate that the materials comply with the specified requirements.

D. Calculations: Calculations, stamped and certified by a California-registered professional engineer, to demonstrate structural adequacy of panels and anchorage system, and compliance with criteria specified. Coordinate calculations submitted with shop drawing submittals.

E. Manufacturer instructions: Manufacturer instructions for care, repair and replacement procedures, and samples showing repaired panels.

F. LEED: LEED certification product data as specified in Section 01 81 13, “Sustainable Design Requirements”, for the following LEED credits:

1. Credit MR 4.1 & 4.2, Recycled Content.
2. Credit MR 5.1, Regional Materials, Manufactured Locally.
3. Credit MR 5.2, Regional Materials, Harvested / Extracted Locally.
4. Credit MR 6, Rapidly Renewable Materials.
5. Credit EQ 4.1, Low Emitting Materials, Adhesives & Sealants.
6. Credit EQ 4.1, Low Emitting Materials, Paints.

1.6 QUALITY ASSURANCE

A. Fabricator/installer qualifications:

1. Single firm with a minimum of 5 years successful experience in the fabrication and erection of panel systems of similar sizes, shapes and finishes required for this Project, and which has ample production facilities to produce, furnish and supply the panels as required for installation without delay to the Work.
2. Firm must be regularly engaged in the engineering, fabrication, finishing and installation, of similar work.

B. Mockup~~s~~: Build mockup~~s~~ to verify selections made under sample submittals, to demonstrate aesthetic effects and set quality standards for fabrication and installation.

1. Build mockup of typical wall panel, including soffit, approximately one bay wide by one story high by full thickness, including supports, attachments, and accessories.
2. Conduct water spray test of mockup of metal wall panel assembly, testing for water penetration according to AAMA 501.2.
3. Approval of mockup~~s~~ does not constitute approval of deviations from the Contract Documents contained in mockup~~s~~ unless Design Consultant specifically approves such deviations in writing.
4. Approved mockup~~s~~ may become part of the completed Work if undisturbed at time of Substantial Completion.

1.7 HANDLING

A. Delivery:

1. After fabrication, protect panels with strippable plastic film.
2. Deliver panels to ensure that there will be no damage or staining.
3. Deliver other materials, except bulk materials, in manufacturer's unopened containers with name, brand, type, grade and color fully indicated thereon. Store bulk materials as required to avoid any deleterious effects of weather, soiling or contamination.
4. Delivered items shall be properly boxed or crated. Mark containers with installation location, fabrication/piece numbers, shop drawings reference, etc., as applicable.

B. Storage:

1. Store above grade on suitable surfaces using polyethylene film to separate panels from supporting or protecting members.
2. Protect from weather, soiling and damage of every kind.
3. Crate panels to prevent accumulation of moisture between panels.

1.8 SPECIAL WARRANTIES

A. Warrant that wall panels and their support system elements will meet the specified performance criteria specified and will be free from defects in materials and workmanship for 2 years after Substantial Completion, except where longer warranties are specified below.

1. Certify in writing that installed work is in accordance with the Contract Documents and authorized alterations and/or additions thereto and that, should defect develop during the warranty period due to improper workmanship or materials installed as a part of this Section, such defects will upon written request, be repaired or replaced at no additional cost to the City.
2. If exploratory work is required to determine the cause of the defects, the cost of such work shall be borne by the Contractor when his work is found to be at fault.

B. Further warrant the City in writing that wall panels will not evidence delamination of any type for 10 years after Substantial Completion.
C. Warrant finish against fading, chalking, peeling, cracking, checking, chipping, or erosion to base metal of the exterior panel finish for 10 years after Substantial completion.
D. Defective materials and workmanship are hereby defined to include evidence of abnormal deterioration or aging or weathering or work, structural failure of components resulting from exposure to normal load and forces, sealant failures, deterioration or discoloration of finishes in excess of normal weathering and aging, delamination, and failure to fulfill other specified performance requirements.

E. The warranty, the enforcement or lack of enforcement thereof, shall not deprive the City of other actions, rights or remedies available to him. Warranty shall be in form approved by City.

PART 2 - PRODUCTS

2.1 METAL PANELS

A. Manufacturers: Hendrick Manufacturing Company, or equal.
B. Custom dimpled aluminum wall panels:

1. Die-pressed panels with random pattern, as indicated, 2- to 3-inch diameter varying depth dimples.
2. Metal thickness: 1/8 inch.
3. Finish: Powder coat Tiger Drylac 75.
4. Color: Custom Color selected by the Architect.~~TBD~~.

C. Custom perforated aluminum screen panels over exterior plaster wall.

1. Pattern as indicated on the Drawings.
2. Metal thickness: 1/8 inch.
3. Finish: Powder coat Tiger Drylac 75.
4. Color: Custom Color selected by the Architect~~TBD~~.

D. Note: The Design Consultant will furnish the Contractor CAD files of the patterns.

2.2 PERFORMANCE REQUIREMENTS

A. Design requirements, general: Design system so individual panel can be removed without removing or disrupting adjacent panels or materials.
B. The Drawings and Specifications establish visual and performance requirements for the design, fabrication and installation of the metal panels.

1. The Contractor is responsible for the engineering, and design of all components and materials as well as the fabrication, installation and performance of the panel system.
2. Contractor shall obtain necessary approvals and permits, and pay costs therefore from public authorities having jurisdiction.

C. Drawings are diagrammatic:

1. The details shown are intended to establish basic profiles and dimensions, and interfacing requirements of the metal panels to and with other work.
2. Contractor is responsible for the design and engineering of the metal panels within these parameters.
3. The details indicated are incomplete. The Contractor shall develop conditions not detailed during the engineering and shop drawing process to reflect the level of aesthetics of the Project, and to comply with performance criteria specified.

D. Panel design: Design panels to meet or exceed the following structural and weather resistance requirements, as demonstrated by engineering calculations. Loads used in design shall be those prescribed by Code.

1. Structural requirements:

   a. Perpendicular to the plane of the wall, net deflection of framing members shall not exceed L/175 times span, or 3/4 inch, whichever is less. Span is defined as the distance between anchor centerline. For cantilevers, span is defined as twice the distance between anchor centerline and end of cantilever.
   b. Perpendicular to the plane of a soffit, net deflection of framing members shall not exceed L/600 times span under dead load support of panels. Span is defined as the distance between anchor centerlines.
   c. In the plane of the wall, deflection of horizontal framing members shall not exceed L/360 or 1/8 inch, whichever is less. This includes horizontal rail sag due to dead load.
   d. At connection points of framing members to anchors, combined movement of anchor relative to building structure, and framing member relative to anchor, shall not exceed 1/16 inch in any direction.
   e. Stresses shall not exceed the allowable values established by the specifications listed in reference standards. In no case shall allowable values exceed the yield stress. Where permitted by Code, a 1/3 increase in allowable stress for wind or seismic load is generally acceptable, but not in combination with any reduction applied to combined loads.

   ~~f.Limit deflection of metal panels to L/120 of the span or 1/4 inch, whichever is less when tested in accordance with ASTM E 330 at specified design pressure. Measure deflection relative to the horizontal and vertical support members with the allowable deflection being determined by the lesser dimension.~~

   ~~g.At 150 percent of the design pressure loads for metal members supporting panels the net permanent deflection of framing members shall not exceed 1/1000 times span. There shall be no failure or gross permanent distortion of framing members, anchors or connections. At connection points of framing members to anchors, combined movement of anchor relative to building structure, and framing member relative to anchor, shall not exceed 1/16-inch set after load is removed.~~

   ~~h.~~f. Vibration harmonics, wind whistles, noises caused by thermal movement, thermal movement transmitted to other building elements, loosening, weakening or fracturing of attachments or components of system are not permitted in the installed work.

E. Weather requirements:

1. Design wind loads shall be as indicated acting normal to the plane of the wall.

~~2.Wall panels shall be designed for a maximum deflection of L/180 under load.~~

2. Air infiltration of the wall panel system shall be limited to 0.06 CFM/ft^2 at a positive pressure differential of 1.57 psf when tested in accordance with ASTM E 283.
3. There shall be no uncontrolled water penetration to the building interior when the wall panel system is tested per ASTM E 331 at a positive pressure differential of 6.24 psf or 20 percent of the design wind pressure whichever is greater. The test pressure need not exceed 12 psf.
4. Thermal Movements: Allow for thermal movements from ambient and surface temperature changes by preventing buckling, opening of joints, overstressing of components, failure of joint sealants, failure of connections, and other detrimental effects. Base calculations on surface temperatures of materials due to both solar heat gain and nighttime-sky heat loss.

   a. Temperature Change (Range): 120 degrees F ambient; 180 degrees F., material surfaces.

2.3 ACCESSORIES

A. Concealed fasteners shall be ~~cadmium plated carbon steel or~~ 300 series stainless steel with 5/8 inch~~"~~ bonded neoprene and ~~galvanized or~~ stainless steel washers.
B. Sealants: Exposed sealant shall be as specified in Section 07 92 00. Concealed sealants may be butyl.

2.4 FABRICATION

A. Panel system components shall be fabricated in the factory for field-assembly to the greatest extent possible, under controlled environment in fabricator's plant in conformance with accepted Shop Drawings and calculations so tolerances, as stated herein, are not exceeded. Field fabrication of panels is not permitted.
B. Fabrication tolerances:

1. Panel bow: Maximum 0.2 percent of width or length, whichever is greater.
2. Width or length: Plus 0.064 to 48-inch; Plus 0.032 to 144-inch.
3. Thickness: Plus 0.008-inch
4. Squareness: 0.1875-inch difference between diagonals.
5. Camber: 0.062-inch maximum.
6. Radius of exterior bent corners: 1/16-inch maximum.

2.5 FINISHING

A. Finish panel to match approved samples.
B. Paint surfaces within panel cavity exposed to air or moisture.
C. For uniformity finish each panel type for an entire elevation at the same time.

PART 3 - EXECUTION

3.1 EXAMINATION

A. Examine structure that will support the metal panel support system. Verify elevation, tolerances, offset lines, and other conditions that would affect the satisfactory installation and performance of the panels.
B. Correct unsuitable conditions before proceeding with erection.

3.2 PREPARATION

A. Examine surfaces and supports to receive panels. Make sure they are secure and properly aligned.
B. Do not begin installation of panels until Design Consultant has accepted secondary air/water barrier.

3.3 INSTALLATION

A. Install panels and panel support members in compliance with the approved shop drawings, calculations, and fabricator's published instructions.
B. Install panels so that in their final location and position joints are uniform, perfectly aligned, with flush joints, and panels are not twisted out of plane.

C. Adjust work to conform to the following tolerances (maximum variations):

1. Face width of joints: Plus 1/32-inch.
2. Joint taper: 1/100-inch/foot length, with a maximum length of tapering in one direction of 6 feet.
3. Jog in alignment of edge: Plus 1/16-inch.
4. Rough opening dimension: Plus 1/16-inch at head, Plus 1/16-inch at sill, and Plus 1/16-inch at jamb.
5. Deviation from plumb, 1/16-inch maximum per one story height and a maximum of 1/8-inch in a 45 feet run.
6. Deviation from horizontal: 1/8-inch maximum in a 30 feet run.

3.4 SEALANTS

A. Comply with the requirements of Section 07 92 00 for sealants, backer rods, and their installation.

3.5 CLEANING AND PROTECTING

A. Leave protective film on panels in place as long as possible where doing so will not produce discoloration or other undesirable visual defects.
B. Remove protective film when, and in the manner, recommended by panel manufacturer’s instructions.
C. Clean panels in accordance with their manufacturers' published recommendations.
D. Protect panels from damage. Repair or replace damaged panels to Design Consultant's satisfaction.

3.6 ACCEPTANCE

A. Each and every panel will be subject to the Design Consultant's approval or rejection.
B. Panel or panels may be rejected after installation.
C. Carefully remove rejected panels and replace with new panels without delay and without cost to the City.
D. Remove panel or panels damaged in the removal of defective or rejected panels, and replace with new panels.

END OF SECTION

SECTION 07 52 00 – PATCHING EXISTING ROOFING

PART 1 - GENERAL

1.1 SUMMARY

A. Section includes patching existing roofing and base flashings of the existing adjacent building to keep the building watertight whether damage and leaks result from an existing condition, when the Contractor is given access to the site, or is damaged by the work of this Contract

B. Demolition is specified in Division 02 but preparation of existing roof and base flashing to receive the work of this Section is a responsibility of this Section.

C. Related requirements:

1. Division 01 for LEED requirements.
2. Other Section of Division 07 for single ply roof assembly.

1.2 SUSTAINABLE DESIGN REFERENCE

A. USG Green Building Council (USGBC).

1.3 ADMINISTRATIVE REQUIREMENTS

A. Pre-installation meeting: Prior to start of installation, arrange a pre-installation meeting between the manufacturer of existing roofing membrane (if known), the roofer responsible for patching the existing roof, and trades responsible for metal flashings, roof penetrations, or mounting equipment on the roof.

1. If more than one trade will be responsible for the work of this Section, these trades shall attend the meeting.
2. Those present shall review the Drawings, Specifications, roofing manufacturer's instructions, and the roof and base flashings surfaces to be patched.
3. Record minutes of the meeting, decisions made, and corrective measures to be taken before the work of this Section starts.
4. Send copy of the minutes to the Design Consultant no later than 48 hours following the meeting.

1.4 SUBMITTALS

A. Data: Manufacturer Product Data consisting of a detailed list of materials proposed for use, with make and manufacturer's designation.

B. Shop Drawings:

1. Details of flashing at penetrations and terminations.
2. Coordinate other trades Shop Drawings with the work of this Section which is a part of, or will penetrate the roof, or mount to the roof.

C. LEED: LEED certification product data as specified in Section 01 81 13, “Sustainable Design Requirements”, for the following LEED credits:

1. Credit SS 7.2, Reduce Heat Islands, Roof.
2. Credit MR 4.1 & 4.2, Recycled Content.
3. Credit MR 5.1, Regional Materials, Manufactured Locally.

4. Credit MR 5.2, Regional Materials, Harvested / Extracted Locally.
5. Credit MR 6, Rapidly Renewable Materials.
6. Credit EQ 4.1, Low Emitting Materials, Adhesives & Sealants.

1.5 SPECIAL WARRANTY

A. Installer (roofer) shall warrant to the City that the existing roof, after patching, will be watertight for 5 years following Substantial Completion.
B. Installer shall, within the warranty period, make repairs should roof leaks at no cost to the City no later than 24 hours after notification by the City of such an event.

PART 2 - PRODUCTS

2.1 PERFORMANCE REQUIREMENTS

A. Patch existing roofing membrane, and associated base flashing, to prevent the passage of water into the building.

2.2 MATERIALS

A. As selected by the Contractor, compatible with existing materials, and acceptable to the Design Consultant.

PART 3 - EXECUTION

3.1 PATCHING

A. Supervise the cutting of the existing roof membrane to make sure that the patchwork will perform as intended.
B. Clean the deck of foreign materials. Make sure that it is completely dry.
C. Replace removed roof insulation when applicable. If insulation is damaged, provide new matching insulation cut for a tight fit.
D. Apply a minimum of 3 layers of 15 lb. fiber glass or polyester-reinforced roofing plies and a cap sheet matching the existing.

1. Make the first ply 6-inch wider than the patch and each succeeding felt and the cap sheet 6-inch wider than the felt below.
2. Apply each ply in full mopping of hot asphalt or cold roof adhesive where acceptable to the Design Consultant, so that in no place felt touches felt.

E. Patch base flashing with matching materials to make the patch watertight.
F. Mask adjacent cap sheet and surfaces so as not to spill asphalt on these surfaces.

END OF SECTION

SECTION 07 54 19 - THERMOPLASTIC ROOFING

PART 1 - GENERAL

1.1 SUMMARY

A. Section includes:

1. Thermoplastic (PVC) roofing membranes adhered to clean, dry, undamaged plywood and gypsum sheathing.
2. Sheet metal flashings at the perimeter penetrations of the roof membrane.
3. Insulation crickets.
4. Adhesive, fasteners and anchors to attach the roof membrane to wood deck.

B. Related requirements:

1. Division 01 for LEED requirements.
2. Division 06 for plywood roof sheathing.
3. Division 07 for other sheet metal flashings and insulation.
4. Division 48 for roof-mounted solar panels and inverters.

1.2 SUSTAINABLE DESIGN REFERENCE

A. USG Green Building Council (USGBC).

1.3 ADMINISTRATIVE REQUIREMENTS

A. Pre-installation meeting:

1. Prior to start of installation arrange a pre-installation meeting between the roofing manufacturer authorized representative, the Contractor, the Design Consultant, and the roofer and the framer to review Project conditions, the Drawings, Specifications and the roofing manufacturer data.
2. If more than one trade will be responsible for the successful performance of the work of this Section, these trades shall attend the meeting.
3. Ascertain requirements for set-up, construction schedule and coordination of the Work.
4. The parties named above shall survey the roof decks and identify areas of concern and remedial measures.
5. Note that the roof is a major design element and the execution of the work of this Section is paramount to the success of the Project.
6. Record meeting minutes and distribute copy to all concerned, including the Design Consultant, within 7 days after the meeting.

B. Scheduling and sequencing:

1. Sequence work to avoid traffic by equipment or personnel as much as possible over completed roofing. Where such access is absolutely required, provide necessary protection and/or barriers to segregate the work area and to prevent damage to adjacent areas.
2. Do not store materials on completed membrane surfaces. Where storage or traffic is unavoidable, provide plywood, additional protection boards or similar protection to prevent damage to the membrane. Notify the membrane manufacturer that traffic or storage is anticipated.

3. All conduit, utilities boxes, inserts, penetrations and drains shall be in place, ~~grouted where required~~ and permanently fixed ~~to the substrate~~ before the insulation and membrane are installed.

1.4 SUBMITTALS

A. Shop Drawings:

1. Show outline of roofs and their respective size.
2. Show roof topography, identify slopes and gradients.
3. Locate and dimension all proposed seams; seam location is subject to the Design Consultant's approval and shall be relocated, at no cost to the City, when requested by the Design Consultant.
4. Provide large scale details, minimum 3 inches/foot, of fascia treatment, each flashing component, penetrations and terminations.

B. Samples: Samples of each primary material and each color of membrane to be used in the roof systems including each component manufacturer's literature.

1. Make roof membrane samples a minimum of 24 inches square with one welded joint.
2. Make flashing samples a minimum of 6 inches long.

C. Data: Manufacturer Product Data, including installation instructions.

D. LEED: LEED certification product data as specified in Section 01 81 13, "Sustainable Design Requirements", for the following LEED credits:

1. Credit SS 7.2, Reduce Heat Islands, Roof.
2. Credit MR 4.1 & 4.2, Recycled Content.
3. Credit MR 5.1, Regional Materials, Manufactured Locally.
4. Credit MR 5.2, Regional Materials, Harvested / Extracted Locally.
5. Credit MR 6, Rapidly Renewable Materials.
6. Credit EQ 4.1, Low Emitting Materials, Adhesives & Sealants.

E. Warranty:

1. Roofing membrane manufacturer warranty form.
2. Roofer warranty form.

1.5 QUALITY ASSURANCE

A. Acceptance: Submit the following.

1. Technical acceptance from roofing membrane manufacturer of the roofing system.
2. Certifications by producers of roofing materials that materials supplied comply with requirements of the identified ASTM and industry standards.
3. Certification that system specifications meet code and insurance requirements (available from the City).

B. Manufacturer Qualifications:

1. Roofing materials shall be the product of a manufacturer regularly engaged in direct manufacturer of this product for not less than the warranty term (20 years).
2. Use only a Manufacturer who has initiated a post consumer recycling program where roofs have been removed and recycled into new roofing membrane or PVC components.
3. Use only a Manufacturer certified under ISO 14001: 2004 and RC 14001: 2008 responsible care.

C. Membrane thicknesses specified are waterproofing membrane PVC polymer thicknesses. If polyester felt/fleece backing is specified the thickness of the felt/fleece is always in addition to the required membrane thickness and is measured in a weight per square yard. Where required the stated fleece weight is a non negotiable minimum requirement.
D. Unreinforced or polyester reinforced membrane base flashings are prohibited.
E. No "Private Label" or third party membrane manufacturers are approved alternates.
F. Roofer qualifications:

1. Roofing system shall be applied only by a firm authorized in writing, by the roofing membrane manufacturer, to apply the roof membrane specified.
2. Work pertaining to the installation of roofing membrane and flashings shall only be completed by applicator personnel trained and authorized by roofing membrane manufacturer in those procedures, and having a minimum of 5 years application experience.

G. Completion: On completion of installation, and delivery to roofing membrane manufacturer by the Contractor of a certification that work was done in accordance with these Specifications and roofing membrane manufacturer requirements, an inspection shall be made by a technical representative of roofing membrane manufacturer to observe the roof system.
H. Code requirements: Submit evidence that the proposed roof system will meet Code requirements and has been tested and approved or listed by the following testing organizations.

1. FM (Factory Mutual Research Corp.) FM I-90 wind uplift resistance.
2. UL (Underwriters Laboratories, Inc.) Class A membrane.

I. Mockup: Build a mockup of the main roof system (gray), minimum 15 foot square~~4 feet by 4 feet by 4 feet~~ at the site.

1. As a minimum, include one membrane seam, one ridge, fascia~~ all around the mockup,~~ and one valley.
2. Install the roof membrane on ~~T&G~~ plywood substrate, same as will be used for the building roof sheathing and fascia. Provide 2 by 4 framing to support the mockup unless the mockup is on the building.
3. The mockup will be reviewed by the Design Consultant; modify mockup until the Design Consultant's approval is obtained.
4. Approval of mockup does not constitute approval of deviations from the Contract Documents contained in mockup unless Design Consultant specifically approves such deviations in writing.
5. Approved mockup may become part of the completed Work if undisturbed at time of Substantial Completion.

1.6 HANDLING

A. Delivery: In original unopened containers or wrappings.
B. Storage:

1. Handle materials to prevent damage. Place materials on pallets and fully protected from moisture.
2. Store membrane rolls lying down on pallets, and fully protected from moisture with clean canvas tarpaulins. Unvented polyethylene tarpaulins are unacceptable.
3. Store adhesives above 40-degree F.
4. Store flammable materials in a cool, dry area away from sparks and open flames.
5. Remove damaged materials from the job site and replace at no cost to the City.

1.7 JOB CONDITIONS

A. Install materials when environmental conditions are within range acceptable to the roofing membrane manufacturer.
B. Install only materials as much of new roofing as can be made weathertight each day, including all flashing and detail work.
C. Surfaces to receive insulation, membrane, and flashings shall be dry. Should surface moisture occur, provide the necessary equipment to dry surface prior to application.
D. Install uninterrupted waterstops at the end of each day's work, and completely remove them before proceeding with the next day's work.
E. Prior to and during application of insulation and roofing membrane, remove dirt, debris and dust from surfaces either by vacuuming, sweeping or blowing with compressed air and/or similar methods.
F. Conduct fastener pullout tests in accordance with industry standards to help verify condition of deck/substrate and to confirm expected pullout values.

1.8 WARRANTIES

A. Special warranties - Defects: The manufacturer and the roofer, as noted below, shall repair defects within the warranty period at no cost to the City. If work related to roofing, flashing, or metal is found to be within the roofer and/or manufacturer warranty term, defective or otherwise not in accordance with the Contract Documents, the roofer and/or manufacturer, as specified below. shall repair defect(s) at no cost to the City. Defects are defined as follows.

1. Failure of the roof and flashings to remain weathertight during the warranty period.
2. Discoloration of the roof membrane other than caused by normal aging; uneven discoloration will be deemed a defect.
3. Lack of adhesion to substrate, such as evidenced by bubbles (trapped air) under the roof membrane.

B. Manufacturer warranty: Manufacturer shall warrant roofing and flashings against defective materials for all supplied components, and roofer's workmanship, for 20 years after Substantial Completion. Warranty shall not be prorated, shall not include dollar limit, and shall not exclude, without time restriction, ponding water.
C. Roofer's warranty: Roofer shall supply the City with a separate 2-year workmanship warranty. The installer's warranty obligation shall run directly to the City, and a copy shall be sent to the manufacturer.

PART 2 - PRODUCTS

2.1 MANUFACTURERS

A. Sika Sarnafil (basis of design.)
B. Or equal complying with this Section.

2.2 PERFORMANCE REQUIREMENTS

A. Provide roofing system that prevents the passage of water in the building.
B. Membrane shall comply with the following:

1. Field and Flashing membranes shall conform to ASTM D4434 (latest version), "Standard for Polyvinyl Chloride Sheet Roofing". Classification: Type II Grade I.
2. Factory Mutual Research Corporation: Class 1-90
3. Underwriters Laboratories, Inc.: Class A assembly

2.3 ROOF MEMBRANE SYSTEM

A. Basis of design: Sika Sarnafil 60 mils thick (not to exceed +/- 2 mills) G410-15FB fiberglass reinforced membrane with a lacquer coating. Membrane shall conform to ASTM D 4434, "Standard for Polyvinyl Chloride Sheet Roofing" Classification: Type II, Grade I.

1. Field Sheet: Glass fiber reinforced PVC, 60 mils of PVC with a minimum 7oz/sqyd Integral Non-Woven Polyester Fleece backing. Membrane weight minimum 0.36 psf excluding the fleece backing.
2. Colors: Light gray and white, as indicated on the Drawings.

B. Polymer thickness: Membrane manufacturer shall confirm is writing that the polymer thickness is within +/- 2 mils of the polymer thickness specified with at least 28mils above the reinforcement scrim. ASTM +/- tolerance for membrane thickness is not accepted.

2.4 MECHANICAL PAD UNDERLAYMENT

A. PVC underlayment under mechanical pad sheet metal cover: G476 Self-Adhered 120-mil waterproofing membrane, composed of a 60-mil vinyl waterproofing membrane and an integral 60-mil non-permeable, closed cell foam backing layer coated with a pressure-sensitive adhesive.

2.5 FLASHING MATERIALS

A. As supplied by roofing membrane manufacturer.
B. Flashing materials shall be same material as roofing membrane, except that the metal portion of the flashing shall be Type 316 stainless steel.
C. Perimeter edge flashing - Edge Grip - A prefabricated perimeter edge system provided and warranted by the roofing system manufacturer. The system shall have concealed fasteners with no penetrations on the horizontal roof surface and shall includes fasteners and splice plates. Edge Grip shall be made from 2 distinct parts. A rigid retainer base plate and a decorative snap-on fascia cover.

1. Provide 0.05 inch aluminum retainer base plate in 10 feet lengths.
2. Provide 0.04 inch aluminum Kynar Finish Snap-on fascia cover in 10 ft. lengths.
3. Provide matching corners, end caps, fascia sumps, and spillouts as required.

D. Color: Custom Color as selected by Architect.
E. Fascia Depth: As indicated on Drawings.

2.6 ADHESIVES

A. Water-based adhesive for membrane attachment to cover board substrate.
B. Low rise foam adhesive for insulation and cover board attachments.
C. Adhesives must be acceptable to the roof membrane manufacturer for the conditions of use.

1. PVC surfaces: Sarnacol 2121 VOC-compliant adhesive for vertical concrete and steel deck surfaces.
2. Stabond Adhesive.: Low VOC reactivating-type adhesive used to attach membrane to flashing substrate.

2.7 CRICKETS

A. ~~TBD~~To provide slopes indicated and prevent ponding, provide plywood on tapered 2 by 4, or tapered, faced isocyanurate insulation acceptable to the roof membrane manufacturer.

~~2.7FASTENERS~~

~~A.Fastener: Corrosion-resistant fastener recommended by the roofing membrane manufacturer. Length of fasteners shall penetrate the sheathing a minimum of 3 full threads.~~

~~1.The fastener manufacturer, or and accredited testing agency acceptable to the City, shall perform pullout tests.~~
~~2.Results of these tests plus and an assessment by the fastener manufacturer regarding the suitability of the fastener for the Project is required.~~

2.8 ACCESSORIES

A. Fasteners: Stainless steel screws (do not use nails) recommended by the roofing membrane manufacturer. Select length of fasteners to penetrate the sheathing a minimum of 3 full threads.

1. The fastener manufacturer, or and accredited testing agency acceptable to the City, shall perform pullout tests.
2. Results of these tests plus and an assessment by the fastener manufacturer regarding the suitability of the fastener for the Project is required.
3. If insulation crickets are used, provide screws with large sheet metal or plastic caps long enough to penetrate the roof sheathing 3 full threads.

B. Sarnaclad: PVC-coated, heat-weldable 25-gage, Type 316 stainless steel sheet with a 20-mil unsupported Sarnafil membrane laminated to one side.
C. Sarnastack: Vent pipe flashing fabricated from 0.048-inch thick Sarnafil G410 membrane.
D. Sarnacircles “G”: Circular 0.048-inch thick G410 membrane patches welded of T-joints formed by overlapping membranes.
E. Sarnafiller: 2-component urethane sealant used for pitch pocket topping.
F. Sarnacorner: Prefabricated inside and outside corners made of 0.060-inch thick Sarnafil membrane that is heat-welded to membrane or flashing.
G. Sarnafasteners for roof membrane:

1. XPS, #15 heavy-duty, corrosion resistant fastener, shank diameter of 0.21-inch and thread diameter of 0.26-inch, with a driving head of 0.435-inch and #3 Phillips design.
2. Sarnadisc XPS, 18 gage, 2-inch by 3-3/4-inch linear steel plate.

H. Sarnastop: Extruded aluminum, low profile bar installed over the membrane and made watertight with a welded cover-strip, used at all angle changes.
I. Sealants: Sarnafil multi-purpose sealant for termination details.
J. Aluminum tape: 2-inch wide pressure-sensitive tape.
K. Sarnasolv: Solvent cleaner for the specified membrane surface.
L. Walkway pads: Sarnatred (welded) or Cross Grid - (loose laid), matching colors for each roof area.
M. Peelstop: Extruded aluminum, low profile bar used with appropriate fasteners to attach to the roof deck or to walls/curbs at terminations, penetrations and at incline changes of the substrate.
N. All other accessories: As recommended by the roofing membrane manufacturer.

PART 3 - EXECUTION

3.1 EXAMINATION

A. Manufacturer’s inspections:

1. Request the manufacturer's presence before start of this work to review installation procedures and completed work, and to issue warranty specified.

2. Unsatisfactory conditions disclosed by the manufacturer visits, and that of other entities listed in Article 1.2 above, to the site shall be promptly and satisfactorily repaired and the areas re-inspected by the manufacturer before work starts or resumes in affected areas.

B. Examine substrates, conditions and surfaces to/under which materials will be applied/installed/to receive materials.
C. Conduct fastener pullout tests in accordance with industry standards to help verify condition of deck/substrate and to confirm expected pullout values. Remove loose and misplaced fasteners and drive into a solid framing member.
D. Pay special attention to the raised steeply sloped areas of roofing and skylights. These areas will be decked with tongue and grooved plywood. These areas do not receive gypsum cover boards and will have bare backed roofing membrane applied directly to the roof sheathing. The roof sheathing must be attached to the framing with countersunk screws flush with the surface of the deck. Joints in the deck must be smoothed and sanded as imperfections will telegraph through the roofing membrane.
E. Coordinate the installation so that each roofed area is made watertight at the end of each day.

3.2 SUBSTRATE PREPARATION

A. Inspect deck for defects that will adversely affect the quality of this work.
B. Verify that screws are slightly depressed without breaking the plywood veneer and that other defects have been corrected – depressions filled with compatible wood filler, and roughness sanded flush with adjacent surfaces.
C. Substrates shall be clean, smooth, dry, free of flaws, sharp edges, loose and foreign material, oil and grease. Roofing shall not start until defects are corrected, and work of penetrating and adjacent installations has been completed.
D. Apply roofing systems over compatible and acceptable substrates only.

3.3 WOOD NAILERS

A. Install continuous treated wood nailers, of same thickness as insulation height, at the perimeter of the entire roof and around roof projections and penetrations.
B. Screw nailers to sheathing.
C. Provide a 1/2-inch space between nailer lengths.
D. Individual nailer lengths shall not be less than 3-foot.
E. Space fasteners at 12 inches o.c. Stagger fasteners 1/3 the nailer width and install within 6-inch of each end.
F. Nailer attachment shall meet this requirement and current FM Loss Prevention Data Sheet 1-49.

3.4 GYPSUM SHEATHING

A. General Criteria: Install boards according to manufacturer's instructions and shop drawings.

1. Neatly cut boards to fit around penetrations and projections.
2. Cover boards with Sarnafil membrane by the end of the day or the onset of inclement weather.
3. Attachment

a. Mechanically fasten gypsum sheathing boards to the deck with low profile fasteners and plates at a rate according to FMG (where applicable) and Sarnafil's recommendations for fastening rates and patterns. The quantity and locations of the fasteners and plates shall also cause the boards to rest evenly on the roof deck/substrate so that there are no significant and avoidable air

spaces between the boards and the substrate. Install each board tightly against the adjacent boards on all sides.

b. Install fasteners consistently in accordance with fastener manufacturer's recommendations. Fasteners shall have one inch minimum penetration into structural deck as recommended by the fastener and roof membrane manufacturer.

c. Use fastener tools with a depth locator and torque-limiting attachment as recommended or supplied by fastener manufacturer to ensure proper installation.

d. Fasteners shall not telegraph thru the membrane.

3.5 INSULATION

A. Mechanically-attach insulation with approved fasteners to the decks as recommended by roofing membrane manufacturer and in compliance with FM for fastening rates and patterns.

B. Do not install more insulation board than can be covered with membrane by the end of the day or the onset of inclement weather.

C. Use at least 2 layers of insulation when the total thickness exceeds 2.5-inch. Stagger joints at least 12-inch between layers.

D. Attach insulation as recommended by the insulation manufacturer, FM and roofing membrane manufacturer instructions, and so that insulation boards rest evenly on the substrate. Install each insulation board tightly against the adjacent boards on all sides.

3.6 ROOFING MEMBRANE & WALKWAY PADS - GENERAL

A. Install roof membrane over clean, dry substrate in accordance with its manufacturer's instructions in fresh adhesive for 100 percent coverage.

B. Place seams only where accepted on Shop Drawings.

C. Weld G410 coverstrips at G410 seams that do not have a factory selvage edge.

D. Hot air-weld seams continuously.

E. Match approved Mockup.

F. Install walkway pads in the patterns indicated over the completed roof membrane. Space panels one-inch apart. Attach ~~dhere fully~~ to roof membrane with loops of PVC membrane as recommended by the membrane manufacturer.

G. Temporary cutoff:

1. Construct temporary waterstops to provide a 100 percent watertight seal.
2. Where applicable, maintain the stagger of insulation joints by installing partial panels of insulation.
3. Carry the new membrane into the waterstop.
4. Seal the waterstop to the deck and/or substrate so that water will not travel under the new or existing roofing.
5. Seal the edge of the membrane in a continuous heavy application of sealant.
6. Cutout contaminated membrane before resuming work.

3.7 MEMBRANE FLASHINGS AND STEEP SLOPED AREAS

A. Install flashings concurrently with the roof membrane as the job progresses.

B. Adhere flashing materials to compatible surfaces only. Use caution to ensure adhesive fumes are not drawn into the building.

C. Apply Stabond adhesive in smooth, even coats with no gaps, globs or similar inconsistencies. Press the bonded sheet firmly in place with a hand roller. Do not apply adhesive in seam areas. Apply membrane panels uniformly.

D. Install peelstop bar as indicated with approved fasteners into the parapet or the structural deck at the base of parapets, walls and curbs.

E. The minimum flashing height is 8 inches above finished roofing level unless otherwise accepted in writing.
F. Mechanically-fasten all flashing membranes along the counter-flashed top edge with Peelstop/Reglet or equal at 6 to 8 inches on center.
G. Additionally secure adhered flashings that exceed 30 inches in height. Consult manufacturers technical department for securement methods.

3.8 FLASHINGS

A. Install concurrently with roof membrane as the work progresses, in accordance with the roofing membrane manufacturer instructions, to seal all edges and penetrations.
B. Install airtight and continuous metal hook strips behind metal fascias. Fasten hook strips 12 inches on center into a wood nailer or masonry wall.
C. Overlap base flashings with counter flashings at least 4 inches.
D. Extend hook strips past wood nailers over wall surfaces by 1-1/2 inch minimum and be securely sealed from air entry.
E. Space adjacent sheets of PVC coated metal 1/4 inch apart. Fasten the end joints of the metal 6 inches on center. Cover the joints with 1 inch wide aluminum tape. Hot air weld a 4 inch wide membrane flashing strip over the joint.~~ance with the roofing membrane manufacturer instructions, to seal all edges and penetrations.~~

3.9 EDGE GRIP FASCIA

A. Position the Sarnafil bare backed membrane over the roof edge and down outside face of wall, covering treated wood nailer(s) completely.
B. Extend the edge of the membrane over the face of the building approximately 3 inches and secured with the retainer bar.
C. Hot-air weld seams making sure there are no voids in welds.
D. Make sure the retainer bar is clean and free of dirt or dust.
E. Apply a 3/8 inch bead of manufacturer's approved sealant to the intersection of the right angle on the bar. Install bar from right to left as seen from rooftop lapping joints one inch.
F. Fasten bar at 12 inches o.c. through slots using fasteners provided. Field cut sections as necessary.
G. Install joint covers between each fascia section.
H. Hook the joint cover from the top and allow it to hang down the face of the retainer. Do not hook on the drip.
I. Install fascia by hooking the back flange over the top of the retainer. Leave a 1/4 inch gap for thermal movement

3.10 FIELD QUALITY CONTROL

A. Seams:

1. Check welded seams for continuity daily where directed by roofing membrane manufacturer's representative, and in accordance with his directives..
2. Make on-site evaluation of welded seams daily at locations directed by the Manufacturer's Representative.
3. When and where directed by the Design Consultant, take one-inch wide cross-section samples of welded seams at least 3 times a day.
4. Correct welds displaying failure from shearing of membrane prior to separation of weld. Patch each test cut.
5. Test cut shall be patched by the roofer at no extra cost to the City.

B. Roofing membrane is subject to review by Design Consultant and roofing membrane manufacturer.

1. Note defects and non-compliance with Specifications, and itemize roofing membrane manufacturer's recommendations in a punch list.
2. These items must be corrected immediately to the satisfaction of the Design Consultant and roofing membrane manufacturer prior to demobilization.

END OF SECTION

SECTION 07 62 00 - FLASHINGS AND SHEET METALWORK

PART 1 - GENERAL

1.1 SUMMARY

A. Section includes flashings and sheet metal items shown or required to make the building weathertight and not specified in other Sections.

B. Related requirements:

1. Division 01 for LEED requirements.
2. Division 07 for roof hatch.
3. Division 08 for flashings in connection with exterior glass assemblies and counterflashings at perimeter of skylights.
4. Division 09 for finish painting flashings and sheet metalwork.
5. Division 23 for mechanical sheet metal work, and flashings and collars for mechanical and electrical work, except as specified herein for roof drains.

C. Demolition is specified in Division 02 but preparation of existing sheet metal to be patched is a responsibility of this Section.

1.2 SUSTAINABLE DESIGN REFERENCE

A. USG Green Building Council (USGBC).

1.3 ADMINISTRATIVE REQUIREMENTS

A. Pre-installation meeting:

1. Prior to start of installation, arrange a pre-installation meeting between the Contractor, the installer , and the Design Consultant to review areas where flashings will be installed, as well as other conditions that would affect the quality of this work, the Drawings and Specifications.
2. Review existing building and conditions, all typical and atypical details to verify the fabrication and installation methods that the Contractor will follow, as well as corrective actions that are required.
3. Special conditions not specifically referenced or addressed by the Project Drawings, manufacturer's typical details, or the Shop Drawings, shall also be identified, reviewed and discussed.
4. Take photographs and notes of unresolved conditions, if any, along with sketches of the same unresolved conditions so that a determination can be made of actions to be taken to assure an installation that will be visually acceptable to the Design Consultant, and watertight.
5. Record meeting minutes and distribute copy to all concerned, and the Design Consultant, within 48 hours after the meeting.

1.4 SUBMITTALS

A. Data: Manufacturer product specifications, installation instructions and general recommendations for installation of prefabricated assemblies.

B. Shop Drawings:

1. Show typical and atypical details, material weight, methods of joining and attachment, and relationship with adjacent materials and supports of all sheet metal assemblies.
2. Detail interface with adjacent materials. For interface between flashings with different profiles and conditions difficult to illustrate in 2-dimension, furnish isometric drawings.

C. Samples: Assembled Samples of the following at least 6 inches long, except as otherwise specified. Mount on plywood and include all components to be installed under this Section for each Sample.

1. Complete coping, including inside and outside corner condition, with legs at least 12 inches long, with typical moving and non-moving joints. Inside and outside corners must be fully soldered; sealed joints at those locations are unacceptable.
2. Gutter including holding strap, and attached conductor head and downspout.
3. Counterflashing with receiver.

D. LEED: LEED certification product data as specified in Section 01 81 13, “Sustainable Design Requirements”, for the following LEED credits:

1. Credit MR 4.1 & 4.2, Recycled Content.
2. Credit MR 5.1, Regional Materials, Manufactured Locally.
3. Credit MR 5.2, Regional Materials, Harvested / Extracted Locally.
4. Credit MR 6, Rapidly Renewable Materials.
5. Credit EQ 4.1, Low Emitting Materials, Adhesives & Sealants.
6. Credit EQ 4.1, Low Emitting Materials, Paints.

1.5 HANDLING

A. Do not store sheet metal flashing and trim materials in contact with other materials that might cause staining, denting, or other surface damage. Store sheet metal flashing and trim materials away from uncured concrete and masonry.
B. Protect strippable protective covering on sheet metal flashing and trim from exposure to sunlight and high humidity, except to the extent necessary for the period of sheet metal flashing and trim installation.

PART 2 - PRODUCTS

2.1 PEFORMANCE REQUIREMENTS

A. Design criteria and performance requirements: Fabricate and install the work of this Section to withstand wind loads, structural movement, thermally induced movement, and exposure to weather without failing, rattling, leaking, excessive oil-canning, and fastener disengagement.

1. Thermal movements:

a. Provide sheet metal flashing and trim that allow for thermal movements resulting from the following maximum change (range) in ambient and surface temperatures by preventing buckling, opening of joints, hole elongation, overstressing of components, failure of joint sealants, failure of connections, and other detrimental effects.
b. Provide clips that resist rotation and avoid shear stress as a result of sheet metal and trim thermal movements.

c. Base engineering calculation on surface temperatures of materials due to both solar heat gain and nighttime-sky heat loss.
d. Temperature change (range) of 120-degree F ambient; 180-degree F, material surfaces.

2. Water infiltration: Provide sheet metalwork and flashings that do not allow water infiltration to building interior, and to damage materials, such as insulation, in exterior walls.

2.2 MATERIALS

A. Sheet steel: Commercial quality carbon steel sheets complying with ASTM A 653, lock-forming grade, galvanized with a G90 zinc coating, 24-gage (0.025 inch) minimum unless otherwise indicated.

B. Nails:

1. For attaching sheet steel to wood: Large flat head "stronghold" type roofing nails with barbed point, formed of hot-dip galvanized steel of sufficient length to penetrate a minimum of one-inch into the wood nailer.
2. For attaching sheet steel to concrete: 1-1/4-inch by 8d hot-dipped, galvanized hardened steel nails with lead washers.

C. Hot-dip galvanized self-tapping screws, self-locking rivets and bolts, and other suitable fasteners designed to withstand design loads.

1. Fasteners for flashing and trim: Blind fasteners or self-drilling screws, gasketed with hex washer head.
2. Blind fasteners: High-strength aluminum or stainless-steel rivets.

D. Solder and flux: 50-50 lead/tin solder complying with ASTM B 32 and ASTM B 284used with a non-corrosive flux.

E. Sealing tape:

1. Pressure-sensitive, 100 percent solids, polyisobutylene compound sealing tape with release-paper backing.
2. Provide permanently elastic, nonsag, non-toxic, non-staining tape.

F. Expansion-joint sealant: For hooked-type expansion joints, which must be free to move, provide non-setting, non-hardening, non-migrating, heavy-bodied polyisobutylene sealant.

G. Bituminous coating:

1. Cold-applied asphalt mastic, SSPC-Paint 12, compounded for 15-mil dry film thickness per coat.
2. Provide inert-type noncorrosive compound free of asbestos fibers, sulfur components, and other deleterious impurities.

H. Slip sheet: Building paper, minimum 5 lb./100 square feet, rosin-sized.

I. Flexible flashing (for use under copings): 9-inch wide self-adhering (peel and stick) flexible modified bitumen flashings by one of the following.

1. CCW-705-TWF by Carlisle Coatings & Waterproofing.
2. Fast Flash by Protecto Wrap Co.
3. Sealtight Air-Shield by WR Meadows, Inc.
4. Seam Seal Tape by SafSeal Innovations (butyl).
5. Vycor Weather Barrier Strips by Grace Construction Products.

2.3 PREFABRICATED ASSEMBLIES

A. Counterflashing assemblies: Formed of 24-gage galvanized sheet steel, of the profiles shown on the Drawings, complete with factory-formed internal and external corners, and end closures by one of the following.

1. Type ST (stucco)~~[, CO (concrete), SM (surface mounted)~~.
2. Fry Reglet Corp. (basis of design.)
3. Keystone Flashing Co.
4. CF Cheney Flashing Co.
5. MM Systems Corp.
6. Pacific Loxtite Flashing Co.
7. National Cornice Works.
8. Or equal.

B. Roof expansion joint covers:

1. Prefabricated assembly consisting of an insulated neoprene or EPDM bellows, filled with mineral insulation, bonded to 26-gage galvanized sheet steel flanges, Expand-O-Flash by Johns Manville, Metalastic by GAF Materials Corp., or equal by York Manufacturing Inc.
2. Provide complete units with factory-fabricated transitions and end pieces.

C. Strainer units for conductor heads: Removable beehive design fabricated from 0.062-inch diameter galvanized steel wire or wire mesh with openings not more than 1/2-inch.

2.4 FABRICATION

A. General:

1. Shop fabricate flashings and sheet metal work to comply with profiles and sizes indicated on the Drawings and standard Sheet Metal and Air Conditioning Contractors National Association, Inc. (SMACNA) detail plates of the "Architectural Sheet Metal Manual."
2. Form sheet metal on bending brake with straight, sharp edges. Shape, trim, and hand seam sheet metal on bench; keep job site forming to a minimum.
3. Comply with metal producers' recommendations for tinning, soldering, and cleaning flux from metal.
4. Fabricate with joints and corners accurately machined, filed and fitted, and rigidly framed together and connected.

B. Fabricate in as long length as possible to minimize field joints.

C. Prefabricate intersections, including counterflashings, with mitered, riveted joints. Make corners and intersections with legs a minimum of 24-inch long extending in each direction.

D. Tinning and soldering:

1. Tin edges on both sides of sheet steel to be soldered.
2. Perform soldering slowly, thoroughly heating seams and completely sweating solder through full width of seams.

E. Exposed edges: Neatly double back sheet metal 1/2 inch to stiffen edges and to provide a finished appearance.

F. Provisions for attachment to structure: Furnish supports, hangers, bracing, anchors and other devices shown, specified or necessary for reinforcement and proper attachment of flashings and sheet metal to building.
G. Isolation of incompatible materials: As specified in Section 05 50 00.

PART 3 - EXECUTION

3.1 EXAMINATION

A. Examine conditions and measurements affecting the work of this Section at site.
B. Correct detrimental conditions before proceeding with installation.

3.2 GENERAL REQUIREMENTS

A. In addition to the assemblies listed above, provide required sheet metal flashings, counterflashings, transitional and interface flashings required to achieve a properly weatherproofed, flashed and counterflashed building envelope, including sheet metal flashings in the angles formed where exterior waterproofed decks abut walls, and as well at curbs, platforms, ventilators, pipes, roof hatch, and other vertical and horizontal surfaces, where indicated and necessary to make the Work weatherproof.
B. Comply with manufacturer's installation instructions where applicable, and applicable SMACNA and NRCA details, except as indicated and specified.
C. Install counterflashing assemblies at a constant height above the roof.

1. Anchor counterflashing securely into reglet by friction, or provide lead wedges spaced 2-foot o.c. maximum.
2. Use manufacturer standard splice plates and preformed corners for a weathertight assembly.

D. Coordinate this work with other trade whose work penetrate, intersects and adjoins flashings and sheet metal work, to permit the correct sequencing and the watertightness of the assemblies.

3.3 PATCHING EXISTING SHEET METALWORK

A. Provide new sheet metal work of the same profiles and dimensions as the existing work.
B. Make junction of new and existing sheet metal installations weatherproof. When joining existing sheet metalwork, lap new and existing flashings a minimum of 2 inches and make lap weathertight either with sealant, by soldering, or by mechanical means.

3.4 INSTALLATION

A. General:

1. Install sheet metal work in accordance with the approved shop drawings.
2. Fasten coping on inside wall with hex head screws and bonded sealing washers through oversized holes in the back of the coping. Except as specified, lap and solder corners and angles; lapping and sealant method is not an acceptable substitute for coping corners; provide for thermal movement no more than 10 feet from corner.
3. Slope copings and sills with a minimum slope of 10 percent to drain away form walls and building interior. Slope gutters 1/4-inch per foot to drain.
4. Solder joints of window flashings (pans) and saddles.

5. Attach work securely to supporting construction, plumb, level, with tight, flush joints allowing for thermal movements.
6. Install work with lines, arises, and angles sharp and true.
7. Fold exposed edges neatly to form a 1/2-inch hem on the concealed side; hem all exposed edges, unless otherwise indicated.
8. Assemble work so that face of metal in contact has hairline joints, except where required for expansion or fitting. Provide backup plates at joints.
9. Conceal fastenings and reinforcement where they would be visible by the public and the building occupants.
10. Vulcanize joints of the roof expansion joint covers and lap the sheet metal portion, after sealing for water tightness.
11. Finish work shall be straight, smooth and continuous, without dimples, dents and other damage.

B. Soldering:

1. Protect underlying waterproof membrane (flexible flashing) when soldering sheet metal.
2. Except as specified, solder all joints not intended for expansion and contraction.
3. Clean material and tin prior to soldering.
4. Solder slowly. Heat the seams thoroughly, and completely fill with solder.
5. Make exposed soldering on finish surfaces neatly, full flowing and smooth.
6. Wash acid flux with a soda solution after soldering and remove soldering flux on exposed surfaces.

C. Nailing:

1. Confine nailing of sheet metal generally to sheet metal having a maximum width of 18-inches. Nailing of flashings shall be confined to one edge only.
2. Space nails evenly not over 12-inches o.c., and approximately 2-inches from the edge.
3. Face nailing is not permitted. Do not nail sheet metal assemblies on horizontal surfaces.
4. Where sheet metal is applied to surfaces other than wood, furnish detailed shop drawings showing locations of required sleepers and nailing strips specified in Section 06 10 00.

D. Cleats:

1. Provide cleats for sheet metal 18-inch and over in width. Space cleats evenly not over 12 inches o.c.
2. Make cleats not less than 2 inches wide by 3 inches long, and of the same material and thickness as the sheet metal being installed.
3. Secure one end of the cleat with 2 nails and the cleat folded back over the nail heads. Lock the other end into the seam. Pre-tin cleats for soldered seams.

E. Bolts, rivets, and screws:

1. Install bolts, rivets, and screws where required. Space equally and symmetrically.
2. Provide compatible washers to protect surface of sheet metal and to provide a watertight connection.

F. Dissimilar material protection:

1. Protect sheet metal in contact with dissimilar metals, concrete, masonry and plaster with a heavy coating of bituminous paint, approved separation tape, or building felt or paper.
2. Set sheet metal assemblies supported by pressure-treated wood on building paper or felt attached to the wood nailer, except set copings on flexible flashing specified. Lap on vertical surfaces at least 2 inches.

G. Seams - general: Make seams straight, uniform in width and height, with no solder showing on the face.

1. Flat-lock seams: Finish not less than 3/4-inch wide made in the direction of water flow.
2. Lap seams: Finish soldered seams not less than one-inch wide. Overlap seams not soldered at least 3-inches.
3. Loose-lock expansion seams: No less than 3 inches wide, designed to provide minimum one-inch movement within the joint. Fill joint completely with sealant applied at not less than 1/8-inch thick bed.
4. Standing seams: Not less than one-inch high, double locked without solder.

H. Expansion and contraction:

1. Provide for thermal and building movement without overstressing the material, breaking connections or producing wrinkles and distortion in finished surfaces. Make sheet metal installations weathertight at all locations.
2. Provide expansion and contraction joints at not more than 40-foot intervals, except that where the distance between the last expansion joint and the end of the continuous run is more than half the required interval spacing, provide an additional joint. Where expansion and contraction joints are exposed to view, their location is subject to the Design Consultant's approval.
3. Exposed surfaces shall be free from visible wave, warp, and buckle.

I. Flexible flashing: Install under all parapet caps. Lap joints 2-inches. Carry flexible flashing down wall as far as the edge of the coping; overlap wall weather barrier at least 2-inches.

J. Completed work: Completed flashings and sheet metal work shall be watertight, free of tool marks, dents, scratches and other damages, with joints and corners accurately machined, filed and fitted, and rigidly framed together and connected.

END OF SECTION

SECTION 07 72 33 - ROOF HATCH

PART 1 - GENERAL

1.1 SUMMARY

A. Section includes:

1. Single leaf roof hatch.
2. Hatch railing.

B. Related requirements:

1. Division 01 for LEED requirements.
2. Division 05 for “Safety Post” attached to ladder and for all other railings.
3. Division 09 for finish painting hatch.

1.2 SUSTAINABLE DESIGN REFERENCE

A. USG Green Building Council (USGBC).

1.3 SUBMITTALS

A. Shop drawings:

1. Large scale, dimensioned drawings, showing fabrication and installation details. Indicate dimensions, weights, loading, required clearances, method of field assembly, and components.
2. Include plans, elevations, sections, details, and attachments to other work.

B. Data:

1. Manufacturer product data for the hatch and railing.
2. Supplement with details showing attachment to supports and interface with adjacent construction, including roof membrane.

C. LEED: LEED certification product data as specified in Section 01 81 13, “Sustainable Design Requirements”, for the following LEED credits:

1. Credit MR 4.1 & 4.2, Recycled Content.
2. Credit MR 5.1, Regional Materials, Manufactured Locally.
3. Credit MR 5.2, Regional Materials, Harvested / Extracted Locally.
4. Credit MR 6, Rapidly Renewable Materials.
5. Credit EQ 4.1, Low Emitting Materials, Adhesives & Sealants.
6. Credit EQ 4.1, Low Emitting Materials, Paints.

PART 2 - PRODUCTS

2.1 MANUFACTURERS

A. The Bilco Co. (basis of design.)
B. Babcock-Davis Hatchways, Inc.

C. Nystrom Inc.
D. Precision Stair Corp.
E. Williams Brothers Corp.
F. Inryco, Inc.
G. Or equal.

2.2 PERFORMANCE REQUIREMENTS

A. Fire resistance: UL 790, Class A.
B. Design loads:

1. Hatch: Design, fabricate, and install so that the completed assembly will be weathertight when closed, will withstand dead and live loads caused by personnel and wind pressure and wind uplift. Provide additional support and reinforcement to manufacturer standard assembly as required to conform to specified performance requirements.

   a. FM rating: Comply with insurance rating bureau requirements for class and securement rating (wind uplift resistance) of Factory Mutual (FM) Class I-90 requirements.
   b. Live load: 40 psf minimum.
   c. Concentrated load: 250 lb.
   d. Internal pressure: 20 psf
   e. Design loads shall be supported without permanent deformation, or disengagement of seals or anchors.

2. Railing and gate: Design, fabricate, and install to comply with Code and OSHA.

2.3 MATERIALS/CONSTRUCTION HATCH

A. Cover: 14-gage hot-dip galvanized steel with 3-inch beaded and welded flange, insulated with one-inch thick fiber glass insulation, and lined with a 22-gage galvanized steel liner.
B. Curb:

1. 12 inches high, fabricate from 14-gage hot-dip galvanized steel with integral flanges.
2. Continuously weld the curb at corners to insure watertightness.
3. Insulate the exterior face of the curb with one-inch thick rigid fiberboard or Perlite insulation.

C. Hardware: Assemble the hatch with heavy stainless steel pintle hinges and compressive spring operators enclosed in telescopic tubes.

1. Provide positive snap latch with exterior and interior turn handles and padlock hasps inside and outside.
2. Equip cover with compression-spring-operated enclosed in telescopic tubes, and an automatic hold-open arm complete with vinyl grip handle for one hand release, and weatherstrip with neoprene draft seals.
3. For the gate, provide self-closing stainless steel hinges, and self-latching stainless steel latch.

D. Finishes:

1. Hardware: Zinc- or cadmium-plating standard with the manufacturer.
2. All other surfaces: Bonderized for paint adhesion and painted with manufacturer's standard rust-inhibitive primer.

2.4 RAILING

A. “Bil-Guard Hatch Railing System” , or equal, (no known equal) fixed railing system complying with OSHA fall protection regulations (29 FR 1910.23) with self-closing gate and self-latching gate ~~lock~~latch.

PART 3 - EXECUTION

3.1 EXAMINATION

A. Examine adjacent construction and supports.
B. Verify that opening is within allowable tolerances, plumb, level, will provide a solid anchoring surfaces.
C. Correct detrimental conditions before proceeding with installation.

3.2 INSTALLATION

A. Comply with the hatch manufacturer’s instructions.
B. Install the hatch over the opening, plumb, level and square.
C. Attach securely to supporting structure with a minimum of 2 bolts per side.
D. Mount railing securely to curbs in accordance with its manufacturer’s instructions; do not attach to, or on roof.
E. Verify operation of hatch cover and railing gate; adjust and lubricate the cover for ease of operation and watertightness where applicable.

END OF SECTION

SECTION 07 92 00 - JOINT SEALERS

PART 1 - GENERAL

1.1 SUMMARY

A. Section includes requirements pertaining to all sealants required for the Project (except as specified below).

B. This Section becomes an integral part of all Sections containing references to this Section, and applies to all locations where sealants are indicated on the Drawings, specified and required to make the building weathertight.

C. Section also includes sealants for interior joints in vertical applications, where required to close gap between different materials (paintable and non-paintable), and horizontal traffic surfaces as follows:

1. Control and expansion joints on exposed interior surfaces of exterior walls.
2. Perimeter joints of exterior openings.
3. Perimeter joints of, and penetrations in plenum floor slab under the raised flooring. These joints must be air-tight.
4. Tile control and expansion joints.
5. Perimeter joints between interior wall surfaces and frames of interior doors and windows.
6. Perimeter joints of toilet fixtures.
7. Other joints indicated.

D. Related requirements:

1. Division 01 for LEED requirements.
2. Division 03 for preformed compressible expansion joint fillers for concrete slabs.
3. Division 07 for firestopping sealants.
4. Division 08 for storefronts and glazing sealants.
5. Division 09 for acoustical sealants.
6. Division 23 for duct sealants.

1.2 SUSTAINABLE DESIGN REFERENCE

A. USG Green Building Council (USGBC).

1.3 ADMINISTRATIVE REQUIREMENTS

A. Pre-installation meeting:

1. Prior to start of installation of exterior ~~vertical~~ sealants of the building envelope, arrange a pre-installation meeting between the sealant manufacturer authorized representative, the Contractor, the installer , and the Design Consultant to review conditions of surfaces to be sealed, as well as other conditions that would affect the quality of this work, the Drawings and Specifications, and the sealant manufacturer's data.
2. If more than one trade will be responsible for the successful performance of the work of this Section, these trades shall attend the meeting.
3. Review all typical and atypical details to ~~verify~~ review the method of sealing joints that the Contractor will follow, as well as corrective actions that are required.

4. Special conditions that are not specifically referenced or addressed by the Project Drawings, manufacturer's typical details, or the Shop Drawings, shall also be identified, reviewed and discussed.
5. Take photographs and notes of unresolved conditions, if any, along with sketches of the same unresolved conditions so that a determination can be made of actions to be taken to assure an installation that will be acceptable, watertight and acceptable to the sealant material manufacturer for issuance of the warranty.
6. Record meeting minutes and distribute copy to all concerned, and the Design Consultant, within 7 days after the meeting.

1.4 DEFINITIONS

A. Substrates:

1. M type substrates: Concrete, concrete masonry units, brick, mortar, natural stone. The term "masonry" means brick, stone, and concrete masonry work.
2. G type substrates: Glass and transparent plastic glazing sheets.
3. A type substrates: Metals, porcelain, glazed tile, and smooth plastics.
4. O type substrates: Wood, unglazed tile; substrates not included under other categories.

1.5 SUBMITTALS

A. Data:

1. Manufacturer Product Data sheets and published instructions for each type of sealant, backing, bond breaker, and other accessory materials, together with statement that the proposed materials comply with these Specifications.
2. Include manufacturers' recommendations for surface preparation and priming for all substrates to be in contact with sealant on the Project.

B. Certification: Sealant manufacturer certification that sealants, backing rods, and other materials proposed for use in the application of sealants, are chemically compatible with the materials which will come in contact with the sealants and will not cause deterioration, premature aging and staining of adjacent materials, or the sealants.
C. Test results: Results of adhesion and staining tests performed on same materials as those intended for use on the Project.
D. Samples: Cured samples of the various types and colors of materials proposed for use, approximately 12 inches long, mounted on hardboard backing.
E. LEED: LEED certification product data as specified in Section 01 81 13, "Sustainable Design Requirements", for the following LEED credits:

Credit MR 4.1 & 4.2, Recycled Content.
Credit MR 5.1, Regional Materials, Manufactured Locally.
Credit MR 5.2, Regional Materials, Harvested / Extracted Locally.
Credit MR 6, Rapidly Renewable Materials.
Credit EQ 4.1, Low Emitting Materials, Adhesives & Sealants.

1.6 QUALITY ASSURANCE

A. Uniformity: All sealants used in or on the exterior walls of the buildings shall be made by the same manufacturer.
B. Installer qualifications: Firm with a minimum 5 years of experience with joint sealant applications similar in material, design, and extent to that indicated for Project that have resulted in construction with a record of successful in-service performance.
C. Color selection:

1. Final color selection of sealants to be used for exterior locations will be made by the Design Consultant from job-applied samples on in-place materials.
2. The Design Consultant will select locations and extent of these samples but their lengths will not exceed 10 feet for vertical and horizontal joints of each sealant color.

D. Quality control by sealant manufacturer:

1. Submit statements on the manufacturer's letterhead, dated no earlier that one year prior to submittal, for tests listed below.
2. Test data more than a year old will be acceptable provided manufacturer states that formulations or manufacturing methods have not changed sufficiently to change test results.
3. Submit samples of materials to be used for the Project to the manufacturer as required for tests.
4. Test methods: The following ASTM standards methods apply to sealants to be provided for the Project.

a. C 794: Sealant compatibility and adhesion to each substrate to be encountered on the Project.
b. Compliance with C 920 for elastomeric sealants. Include test results for hardness, stain resistance, adhesion and cohesion under cyclic movement (ASTM C 719), low temperature flexibility, modulus of elasticity at 100 percent strain, effects of heat aging, and effects of accelerated weathering.
c. C 1087: Sealant compatibility with backing.
d. C 1087: Sealant compatibility and lack of adhesion to bond breaker.
e. C 1184: Structural Glazing Specifications.
f. C 1193: Guide for Use of Sealants.
g. C 1248: Stain Test Method.
h. C 1401: Guide for Structural Glazing.
i. C 1472: Guide for Calculating Joint Movement.

5. Include identification of any special substrate cleaning process, and required adhesion promoter or primer.

E. Preconstruction field testing: Prior to installation of joint sealants, field-test each type of ~~non-elastomeric~~ sealant and joint substrate indicated to test their adhesion to joint substrates as follows.

1. Locate test joints where indicated or, if not indicated, as directed by Design Consultant.

1.7 HANDLING

A. Store sealant containers in a protected location in compliance with their manufacturer's instructions until their use. Do not store at temperature higher than 80 degrees F.

1.8 JOB CONDITIONS

A. Do not install sealants under adverse weather conditions, or when temperatures are beyond manufacturer's recommended limits.
B. Proceed with the installation only when forecasted weather conditions are favorable for proper sealant cure and development of early bond strength.

1.9 SPECIAL WARRANTY

A. Warrant sealants against defective materials and workmanship for the following length of time after Substantial completion:

1. Manufacturer:

a. Exterior vertical sealant: Manufacturer's 20-year weatherseal warranty, including non-staining warranty for Dow Corning 795 and 756 SMS.
b. All other exterior locations: Manufacturer's 5 years weatherseal warranty.

2. Installer: 5 years labor and material warranty.

B. Warranty shall further state that installed sealants are warranted against the following:

1. Water leakage through exterior sealed joints.
2. Adhesive or cohesive failure of sealant.
3. Staining of adjacent surfaces caused by migration of sealants or primer.
4. Chalking or visible color change of the cured sealants.

C. Make repairs during the ~~5-year~~ warranty period at no cost to the City.

PART 2 - PRODUCTS

2.1 PERFORMANCE REQUIREMENTS

A. Exterior joint, and underfloor plenum sealants are required to establish and maintain airtight and waterproof continuous seals on a permanent basis, with recognized limitations of wear and aging as indicated for each application.

2.2 MANUFACTURER/TYPE - SEALANTS

A. Colors: Match sealant color to color of adjacent materials as closely as possible using colors selected from the manufacturer's standard palette, as approved by the Design Consultant.
B. General:

1. Do not mix multiple component materials until required for use.
2. Use materials "as received" from manufacturer, without additions, deletions and adulterations of materials.
3. Do not use sealants that have started to cure and those whose shelf life expired.

C. Compatibility: Provide joint sealers, joint fillers and other related materials as follows:

1. That will not cause staining, degradation and premature aging of the adjacent surfaces and the sealant itself, when in contact with these surfaces.
2. Compatible with one another and with joint substrates under conditions of service and application, as demonstrated by sealant manufacturer based on testing and field experience.

D. Bulk sealants for interior and exterior horizontal application subject to pedestrian or vehicular traffic: Single component silicone sealant.

1. Products:

a. Dow Corning Corp.; “890-SL” or “SL Parking Structure Sealant” (basis of design).
b. Pecora Corp.; “300 SL Pavement Sealant.”
c. Crafco Inc.; “RoadSaver Silicone SL.”
d. Or equal.

E. For all other exterior applications:

1. Dow Corning “795” (basis of design).
2. General Electric “Silpruf,” “Silpruf LM,” “Silpruf NB.”
3. Tremco “Spectrem 1.”
4. Or equal.

F. For interior damp, wet and semi-wet locations, other than floors, such as toilet rooms where a mildew-resistant sealant is required: Provide white sealant, unless otherwise noted. Single-component mildew-resistant neutral-curing silicone sealant:

1. Dow Corning Corp. “786” basis of design.
2. Pecora Corp. “898.”
3. General Electric Corp. “1700.”
4. Or equal.

G. For all other interior applications (paintable sealant): Latex sealant complying with ASTM C 834, Type P, Grade NF.

1. Pecora Corp. “AC-20+.”
2. Schnee-Morehead, Inc. “SM 8200.”
3. Sonneborn, Division of ChemRex Inc. “Sonolac.”
4. Tremco “Tremflex 834” or “Acrylic Latex 384.”
5. Or equal.

H. Tape sealants:

1. American Saint-Gobain “Norseal 730.”
2. “Norseal 770,”
3. Or equal by Pres-On Tape & Gasket Corp. or Schnee-Morehead.

2.3 ACCESSORY MATERIALS

A. Sprayed polyurethane foam sealant: One- or 2-component, foamed-in-place, polyurethane foam sealant, 1.5 to 2.0 pcf density; flame spread index of 25 or less according to ASTM E 162; with primer and noncorrosive substrate cleaner recommended by foam sealant manufacturer.

B. Joint cleaner, primer and sealer: As recommended by the sealant manufacturer, for the surfaces to be cleaned, primed or sealed.
C. Bond breaker tape:

1. Polyethylene or other plastic tape recommended by the sealant manufacturer to prevent 3-sided adhesion where backer rod cannot be used, except for non-moving joints.
2. Use self-adhering tape wherever possible.

D. Backer rod: Provide size, density and shape of rod which will control the joint depth for sealant placement, break bond of sealant at bottom of joint, form optimum shape of sealant bead on back, and provide a highly compressible backer to minimize the possibility of sealant extrusion when joint is compressed.
E. Elastomeric tubing sealant backings:

a. Neoprene, butyl, EPDM, or silicone tubing complying with ASTM D 1056, non-absorbent to water and gas, and capable of remaining resilient at temperatures down to minus 26-degree F.
b. Provide products with low compression set.

2. In paving subject to traffic: Provide hard joint filler such as cork; prevent 3-sided adhesion by using bond breaker tape.

F. Masking tape: Non-staining, non-absorbent material compatible with joint sealants and surfaces adjacent to joints.

PART 3 - EXECUTION

3.1 EXAMINATION

A. Examine conditions and measurements affecting the work of this Section at site.
B. Correct detrimental conditions before proceeding with installation.

3.2 JOINT PREPARATION

A. Clean-out joints immediately before installing sealants to comply with recommendations of joint sealant manufacturer and the following.
B. Remove foreign material from joint substrates that could interfere with adhesion of sealant, including dust, paints (except for permanent, protective coatings tested and approved for sealant adhesion and compatibility by sealant manufacturer), old joint sealants, oil, grease, waterproofing, water-repellents, water, surface dirt, and frost.
C. Clean concrete, masonry, unglazed surfaces of ceramic tile, and similar porous joint substrate surfaces by brushing, grinding, blast cleaning, mechanical abrading, or a combination of these methods to produce a clean, sound substrate capable of developing optimum bond with joint sealants.

1. Remove loose particles remaining from above cleaning operations by vacuuming or blowing out joints with oil-free compressed air.

D. Remove laitance and form release agents from concrete.

E. Clean metal, glass, glazed surfaces of ceramic tile, and other non-porous surfaces with chemical cleaners or other means that do not stain, harm substrates, or leave residues capable of interfering with adhesion of joint sealants.
F. Do not proceed with sealant installation over surfaces that have been painted, waterproofed or treated with water-repellent or other coating unless specifically approved in writing by the sealant manufacturer.
G. Use masking tape or other protection to limit coverage of sealant to joints to be sealed. Remove tape immediately after tooling without disturbing joint seal.

3.3 INSTALLATION

A. Comply with sealant manufacturer's instructions and ASTM C 1193, except where more stringent requirements are specified herein. At the Design Consultant's option, ASTM C 1193 may also be used for rejection of unacceptable installations.
B. Prime or seal surfaces when recommended by the sealant manufacturer; when the manufacturer's instructions on priming are optional, prime the surface. Do not allow primer/sealer to spill or migrate onto adjacent surfaces.
C. Install backer rod for all sealants, except (1) for exterior sealants subject to traffic (verify that joint filler in paving is installed at the proper depth), (2) where the size of joint prevents the insertion of a backer rod, and (3) where recommended otherwise by the sealant manufacturer.

    1. Install backer rods with blunt or rounded tools to avoid puncturing the material.
    2. Do not twist, stretch or braid the backer rod.

D. Install bond breaker tape where space limitation does not permit use of a backer rod.
E. In no case shall sealant have 3-sided adhesion, except for non-moving joints.
F. Employ only proven installation techniques that will ensure that sealants are installed in uniform, continuous ribbons without gaps or air pockets and with complete "wetting" of the rabbet surfaces equally on opposite sides.

    1. Fill concave joints to the configuration shown on Figure 8A of ASTM C 1193.
    2. Provide flush joints to the configuration shown on Figure 8B of ASTM C 1193.
    3. Provide recessed joints configuration as shown on Figure 8C of ASTM C 1193, unless otherwise indicated or required to match adjacent non-moving joint.
    4. Where horizontal joints occur between horizontal and vertical surfaces, fill joints to form a slight cove to prevent trapping moisture and dirt.
    5. Immediately after sealant application and prior to beginning of skinning or curing, tool sealant using tooling agents that will not discolor sealants or adjacent surfaces and are approved by sealant manufacturer.

G. Do not allow sealant or other compound to overflow, spill or migrate into voids of adjacent construction.
H. Remove excess sealant spillage promptly as this work progresses. Clean adjacent surfaces by recommended means to remove sealant, but not damage the surfaces.

3.4 CURING/PROTECTING

A. Cure sealants in compliance with their manufacturer's instructions to obtain high early bond strength, internal cohesive strength and durability.
B. Protect sealants during and after curing period from contact with contaminating substances or from damage resulting from construction operations or other causes so that they are without deterioration or damage at time of Substantial Completion.

3.5 EXISTING SEALANTS

A. Consult with the sealant manufacturer. Sealant manufacturer shall perform necessary tests to verify compatibility of sealant with all materials that will be in contact with sealant to determine if priming of the surfaces to receive sealant is required, and to determine if the existing sealant to be removed from the joints will adversely affect the new sealant.
B. Remove dirt, debris, existing sealant, and other foreign and deleterious matter from joint to be sealed.
C. Clean sealant contact surfaces with sealant manufacturer's approved solvent and cleaner.
D. Apply sealant primer recommended by sealant manufacturer to sealant contact surfaces.
E. Install compressible backer.
F. Place bond breaker tape and backer rod in joint as shown on Drawings. Install backer rod to provide a cavity with a width-to-depth ratio equal to one for joints less than 1/2 inch For expansion joints 1/2 inch or greater in width, install backer rod to provide a cavity with a width-to-depth ratio equal to 2.

END OF SECTION

SECTION 08 11 13 - STEEL DOORS AND FRAMES

PART 1 - GENERAL

1.1 SUMMARY

A. Section includes:

1. Flush steel doors.
2. Steel door ~~and~~ frames, including sidelights.
3. Vision panel frames in steel doors.

B. Work furnished but installed in other Sections: Division 04 for building-in of anchors and grouting of frames in masonry.

C. Work installed but furnished in other Sections:

1. Division 07 for metal cladding on steel doors.
2. Division 08 for finish hardware.

D. Related requirements:

1. Division 01 for LEED requirements.
2. Division 08 for access panels and frames, and glazing vision panels in steel doors.
3. Division 09 for finish painting the work of this Section.

1.2 SUSTAINABLE DESIGN REFERENCE

A. USG Green Building Council (USGBC).

1.3 SUBMITTALS

A. Shop Drawings: Show the following.

1. Door and frame elevations, materials, construction, gage, finish, anchoring for each wall condition, conditions of openings, vision panel ~~and louver~~ sizes and locations, and accessories.
2. Location and size of reinforcement for finish hardware.
3. Details of glazing.
4. Details of conduit and preparations for power, signal, and control systems in doors and frames.
5. Use same reference numbers for openings and details as shown on Contract Drawings.

B. Schedule: Door schedule indicating opening identification symbol, door and frame types, sizes, including thickness, swing, label requirements, ~~[louvers,~~ vision ~~and transom~~ panels, and undercuts.

C. Data: Manufacturer or fabricator Product Data for doors, frames and shop primer.

D. LEED: LEED certification product data as specified in Section 01 81 13 “Sustainable Design Requirements” for the following LEED credits:

1. Credit MR 4.1 & 4.2, Recycled Content.
2. Credit MR 5.1, Regional Materials, Manufactured Locally.
3. Credit MR 5.2, Regional Materials, Harvested / Extracted Locally.

4. Credit MR 6, Rapidly Renewable Materials.
5. Credit EQ 4.1, Low Emitting Materials, Adhesives & Sealants.
6. Credit EQ 4.1, Low Emitting Materials, Paints.

1.4 QUALITY ASSURANCE

A. Regulatory requirements:

1. Fire-rated doors shall be listed by a nationally recognized testing and certification agency acceptable to authorities having jurisdiction. The listed doors shall meet or exceed the requirements of UL10B, NFPA 252 and NFPA 80. Doors shall carry either a UL or ITS (Intertek Testing Services-Warnock Hersey) label.
2. Comply with CBC requirements. Provide tested products that have passed as an assembly in compliance with CBC Standard 7-2 positive pressure smoke testing requirements.
3. Comply with ASTM E 2074, Standard Test Method for Fire Tests of Door Assemblies, Including Positive Pressure on Side-Hinged and Pivoted Swinging Door Assemblies.

1.5 HANDLING

A. Procedure: In accordance with SDI recommendations.
B. Delivery:

1. Inspect doors, frames and accessories delivered to the site for damage. Unload and store, as specified, with a minimum of handling.
2. Unless frames are packaged head to toe, provide temporary steel spreaders securely fastened to the bottom of each frame.

PART 2 - PRODUCTS

2.1 MANUFACTURERS

A. One of the following, or equal:

1. CECO.
2. Curries Co.
3. Door Components, Inc.
4. Los Angeles Fireproof Door Co.
5. Security Metal Products.
6. Steelcraft Manufacturing Co.
7. Stiles Hollow Metal.
8. Or equal.

2.2 PERFORMANCE REQUIREMENTS

A. Acoustical requirements: TBD.

2.3 MATERIALS

A. Coated steel sheets: ASTM A 653, QC classification, with a G60 or A60 zinc coating, mill-phosphatized.

B. Uncoated steel sheets:

1. Hot-rolled steel sheets and strips: Commercial quality, Class 1 carbon steel, pickled and oiled, complying with ASTM A 366, A 568 and A 620.
2. Cold-rolled steel sheets: Commercial quality, Class 1 carbon steel, complying with ASTM A 366 and A 568.

C. Inserts, bolts and fasteners: Manufacturer standard units, except hot-dip galvanize all items in exterior walls.
D. Acoustical seals: TBD.
E. Paints:

1. Shop primer: Rust-inhibitive enamel or paint, either air-drying or baking, suitable as a base for specified finish paints complying with ANSI A224.1, "Test Procedure and Acceptance Criteria for Prime Painted Steel Surfaces for Steel Doors and Frames", and compatible with finish paint system specified in Section 09 90 00.
2. For touchup of damaged galvanized surfaces: SSPC Paint No. 20, Type II (Organic) zinc-rich primer by Tnemec, Porter International, Valspar Corp., Ameron Protective Coatings, ~~or~~ DuPont Co., or equal.

F. Door filler: In compliance with SDI 100, except use UL listed materials in fire-rated doors.
G. Astragals: ~~1.314-inch by 12-gage full-height.~~As specified in Section 08 71 00.

2.4 FABRICATION - GENERAL

A. Do not begin fabrication until the fabricator has received the hardware schedule approved by the Design Consultant and submitted by the hardware supplier.
B. Fabricate work to required profiles by roll-forming, brake-forming and welding to produce hollow metal work with straight and square edges, with surfaces free from warp, wave, buckle, oil-canning and other defects.
C. Fabricate without grind marks, hollow or other out-of-plane areas, holes, burned-out spots, weld build-up and other defacing work. Fill to close cracks and to preserve shapes. Tightly fit loose stops, to hairline joints.
D. Comply with SDI 100 and SDI 117, Manufacturing Tolerances Standard Steel Doors and Frames, except for the following:

1. 0.005-inch in 3-inch span anywhere on the exposed surfaces. Fill depressions with Bondo or other automotive type filler. Sand bumps down, flush with adjacent surfaces.

E. Conform to AWS standards for welding. Face weld frames continuously, with exposed welds ground flush and smooth with parent metal. Welded joints shall be invisible after assembly is painted.
F. Fabricate doors, frames and sidelights at the following locations from coated steel;~~,~~ assemblies in exterior walls, toilet rooms. Elsewhere, fabricate doors and frames from coated or uncoated steel.
G. Finish hardware preparation:

1. Prepare doors to receive finish hardware, including cutouts, reinforcement as specified below, mortising, drilling, and tapping in compliance with templates provided by hardware supplier.
2. Reinforce doors to receive hardware; provide internal reinforcement of sufficient size to avoid the use of through bolts that are not permitted. Drilling and tapping for surface-applied hardware may be done at Project site.
3. Provide 16-gage (0.053-inch) stainless steel reinforcement for pull plates and bars. Provide internal reinforcement for closers on all door frames. Thru bolts (Chicago fasteners) are not permitted.
4. Locate finish hardware as accepted on final shop drawings.

H. Except on weatherstripped frames, drill stops to receive 3 silencers on strike jambs of single-door frames and 2 silencers on heads of double-door frames. Surface-applied (adhesively-applied) stops are not allowed.
I. Provide minimum 26-gage (0.0179-inch) steel plaster guards or mortar boxes at back of hardware cutouts where mortar or other materials might obstruct hardware operation and to close off interior of openings.
J. Steel members shall be pre-straightened, free of wind or twist. Factory-align to a diagonal tolerance of plus or minus 1/16-inch.

2.5 FLUSH DOORS

A. Standard: Complying with SDI 100, Recommended Specifications Standard Steel Doors and Frames, except as specified.
B. Steel doors:

1. SDI Level 2 and Physical Performance Level B (Heavy Duty), Model 2 (Seamless), 18-gage (0.042-inch) for doors up to 3 feet wide, and Level 3 and Physical Performance Level A (Extra Heavy Duty), model 2 (Seamless), 16-gage (0.053-inch) for doors wider than 3 feet. Provide doors with seamless welded edges ground to be invisible from adjacent surfaces; do not use Bondo or similar material to close gap between face sheets at door edge.
2. Close the top of out-swinging exterior doors with an inverted flush channel.
3. Close openings for vision panels with an inverted flush channel.
4. Provide exterior doors with a U factor of 0.24 BTU/hr. by square foot by degree F when tested in compliance with ASTM C 236.

~~C.Astragals: Provide overlapping astragal on one leaf of pairs of doors where required by NFPA 80 for fire performance rating where indicated. Extend minimum 3/4 inch beyond edge of door on which astragal is mounted.~~

2.6 FRAMES

A. General:

1. Fabricate frames to the dimensions and profiles indicated in compliance with SDI 100, Recommended Specifications Standard Steel Doors and Frames, except as noted.
2. Reinforce and miter corners, interlock and/or weld internally. Weld faces continuously and grind smooth.

2.7 VISION PANELS IN DOORS

A. Make cutouts for vision panels square and parallel with door edges.
B. Provide integrally-formed glass stops on security side of doors and removable glass stops on opposite side.

1. Size rabbet to fit glass thickness indicated.
2. Miter glass stop corners; square, butt joints are unacceptable.
3. Attach removable glass stops securely in place with countersunk oval head machine screws spaced equally at not more than 12 inches o.c. and 2 inches from corners.

2.8 SIDELIGHT FRAMES

A. Fabricate as specified for door frames.

2.9 SHOP PRIMING

A. After assembly, clean and prepare steel surfaces by removing mill scale, rust, oil, grease, dirt, and other foreign materials before painting. For coated steel, comply with ASTM D 2092 and the primer manufacturer's instructions.

1. Grind welds and fabrication marks flush and smooth with parent metal.
2. Fill depressions with metal filler before applying the shop primer.
3. Apply one or more coats of epoxy mineral filler to conceal spot welds.
4. Where zinc coating is damaged, touchup with zinc-rich primer.

B. Acid-etch galvanized surfaces before pretreating.
C. Apply shop primer, within time limits recommended by pretreatment manufacturer, to provide a smooth coat of even consistency and to produce a dry film thickness of not less than 1-1/2 mils.
D. Assemblies with visible spot welds before or after application of finish paint will be unacceptable.

PART 3 - EXECUTION

3.1 EXAMINATION

A. Examine adjacent construction and supports.
B. Verify that openings are within allowable tolerances, plumb, level, clean, and will provide a solid anchoring surface for frames.
C. Correct detrimental conditions before proceeding with installation.

3.2 INSTALLING FRAMES

A. Set frames accurately in their scheduled locations, plumb, straight, square and rigid.

1. Comply with these Specifications, the Drawings; ANSI/SDI A250.11, Recommended Erection Instructions for Steel Frames, the approved shop drawings and UL tested procedures for fire-rated openings. When in conflict, the most restrictive provision applies.
2. Brace frames to prevent their displacement during erection of adjacent walls.
3. Coordinate the installation of built-in anchors for wall and partition construction with related trades. Refer to Division 04 for frames in CMU walls.
4. Provide 2 anchors at head of frames exceeding 42 inches in width for frames mounted in steel stud walls.
5. Provide 3/8-inch by 2-inch vertical steel struts extending from top of frame at each jamb to supporting construction above, unless frame is anchored to masonry, continuous boxed studs, or to other structural support at each jamb.

a. Bend top of struts to provide flush contact for securing to supporting construction above.
b. Provide adjustable wedged or bolted anchorage to frame jamb members in compliance with UL 63.

B. Frame anchors: 18-gage (0.0478-inch) galvanized steel.

1. Stud partitions: Insert “nail-on” type with notched clip to engage stud, welded to back of frames. Provide at least 4 anchors for each jamb for frames up to 90 inches high; 5 anchors up to 96 inches high; one additional anchor each 24 inches or fraction thereof over 96 inches. Nail ~~Attach jamb~~ anchors securely to studs with a minimum of four ~~3/8-inch diameter~~ nails (2 per side).

C. Provide UL-tested adjustable floor clips for all frames. Anchor clips to floor with powder-driven pins or bolts in expansion shields.
D. Leave frame spreader bars intact, wherever possible, until frames are set perfectly square and plumb and all anchors are securely attached and grouted where required.
E. Installation tolerances: Adjust door frames for squareness, alignment, twist, and plumb to the following tolerances:

1. Squareness: Plus or minus 1/16 inch, measured at door rabbet on a line 90 degrees from jamb perpendicular to frame head.
2. Alignment: Plus or minus 1/16 inch, measured at jambs on a horizontal line parallel to plane of wall.
3. Twist: Plus or minus 1/16 inch, measured at opposite face corners of jambs on parallel lines, and perpendicular to plane of wall.
4. Plumbness: Plus or minus 1/16 inch, measured at jambs at floor.

3.3 HANGING DOORS

A. Install finish hardware in compliance with its manufacturer's templates and instructions.
B. Hang doors in compliance with their manufacturer's instructions, and adjust to the clearances specified in SDI 100, except as specified below, as indicated on the Drawings, or as required by UL listing for fire-rated doors.
C. Do not install doors warped, bowed, dented or otherwise damaged.
D. Adjust hardware so that doors operate freely for their entire travel, but not loosely, without sticking or hinge binding, with hardware adjusted and functioning properly.
E. Fit doors accurately in frames, within clearances specified below. Shim as necessary.

1. Non-fire-rated standard steel doors:

a. Jambs and head: 1/8 inch plus or minus 1/1 -inch.
b. Between edges of pairs of doors: 1/8 inch plus or minus 1/16 inch.
c. Between bottom of door and top of threshold: Maximum 3/8 inch.
d. Between bottom of door and top of finish floor (no threshold): Maximum 3/4 inch.

2. Fire-rated doors: Install doors with clearances complying with NFPA 80.
3. Smoke-control doors: Install doors according to NFPA 105.

F. Glazing:

1. Comply with installation requirements in Section 08 80 00 and with standard steel door and frame manufacturer's instructions.
2. Secure stops with countersunk flat- or oval-head machine screws spaced equally and symmetrically not more than 8 inches o.c., and not more than 2 inches from each corner.

3.4 TOUCHUP

A. Clean damaged primer, sand smooth, re-clean and spot-prime with paint compatible with the primer and the scheduled finish coats.
B. Before application of primer, touchup galvanized surfaces with zinc-rich coating where zinc coating is removed or damaged.

END OF SECTION

SECTION 08 12 15 - KD STEEL DOOR FRAMES

PART 1 - GENERAL

1.1 SUMMARY

A. Section includes:

1. Interior Knock Down (KD) hollow metal door frames, including frames for sidelites, and trim.
2. Anchors, fasteners and accessories.

B. Related requirements:

1. Division 01 for LEED requirements.
2. Other Sections of Division 08 for the following.

a. Unit (welded) steel door frames.
b. Glass and glazing.

1.2 SUSTAINABLE DESIGN REFERENCE

A. USG Green Building Council (USGBC).

1.3 SUBMITTALS

A. Schedule: Show opening identification symbol, frame types and label requirements.
B. Samples: Of selected color(s) on base metal, not less than 4 inches square for frame and trim.
C. Shop drawings:

1. Frame elevations, types, materials, construction, finish, anchoring, conditions of openings, and accessories.
2. Indicate location and size of reinforcement for finish hardware.
3. Use same reference numbers for openings and details as Contract Drawings.

D. LEED: LEED certification product data as specified in Section 01 81 13, “Sustainable Design Requirements”, for the following LEED credits:

1. Credit MR 4.1 & 4.2, Recycled Content.
2. Credit MR 5.1, Regional Materials, Manufactured Locally.
3. Credit MR 5.2, Regional Materials, Harvested / Extracted Locally.
4. Credit MR 6, Rapidly Renewable Materials.
5. Credit EQ 4.1, Low Emitting Materials, Adhesives & Sealants.
6. Credit EQ 4.1, Low Emitting Materials, Paints.

E. Maintenance material: Provide aerosol touchup paint of matching color to repair minor damage of factory-finished frames.

1.4 QUALITY ASSURANCE

A. Provide fire-resistive frames bearing the label of a testing agency acceptable to authorities having jurisdiction for the fire resistance indicated.

1.5 HANDLING

A. Storage: Indoors, off the floor.
B. Protection: Keep frames in their shipping cartons as long as possible to avoid damaging them.

1.6 MAINTENANCE

A. Provide 2 cans of aerosol paint for City's maintenance.

PART 2 - PRODUCTS

2.1 TYPES/MANUFACTURERS

A. Prefinished C Series frames by Timely, Division of SDS Industries, models TA28 aluminum casings (basis of design,) or equal.

2.2 MATERIALS

A. Frames:

1. Form frame from 16-gage minimum cold-rolled sheet steel complying with ASTM A 366.
2. Prepare frames for die-formed, heat-treated clips to assure tight casing fit. Mechanically fasten clips for a secure and aligned installation.
3. Provide holes on perimeter of frame for fasteners.
4. Provide oval alignment slots to allow visual alignment of the frame in the rough opening.
5. Provide standard 22-gage prefinished casing with standard corner brackets for tight, flush miter.

B. Glass and glazing materials: As specified in Section 08 80 00.
C. Trim: Aluminum extrusions, model TA-32.

2.3 FABRICATION

A. Fabricate frames to require profiles by roll forming and brake forming to produce assemblies with straight and square edges.
B. Fit and fabricate frames with surfaces free from warp, wave, buckle, oil canning and other defects.
C. Verify hardware requirements for each opening to provide proper reinforcement, preparation and anchorage.
D. Locate hardware as specified in Section 08 11 13.
E. Provide reinforcement for closers on all frames.
F. Provide 14-gage hinge reinforcement plates applied to the frames.
G. Prepare frame for strikes.
H. Factory-finish frames as follows:

1. Chemically clean and bonderize.
2. Prime.
3. Apply 2 coats of "Alumatone" paint of the custom colors selected by the Architect~~TBD~~.

PART 3 - EXECUTION

3.1 EXAMINATION

A. Examine adjacent construction and supports.
B. Verify that openings are within allowable tolerances, plumb, level, clean, will provide a solid anchoring surface.
C. Correct detrimental conditions before proceeding with installation.
D. Glazing of sidelites is specified in Section 08 80 00.

3.2 INSTALLING FRAMES

A. Install frames over finished walls and anchor as indicated on approved shop drawings and in accordance with their manufacturer's instructions, with drywall screws that will be concealed after completion of frame installation, to steel studs. For fire resistive frames, space fasteners at 11 inches o.c.
B. Use a prefit template door, or the actual door for the opening, to assure proper alignment and door clearances.
C. Align parts with proper clearances to assure proper fit, tight, flush miters, and desired performances. Adjust frames for squareness, alignment, twist, and plumb to the following tolerances:

    1. Squareness: Plus or minus 1/16-inch, measured at door rabbet on a line 90 degrees from jamb perpendicular to frame head.
    2. Alignment: Plus or minus 1/16-inch, measured at jambs on a horizontal line parallel to plane of wall.
    3. Twist: Plus or minus 1/16-inch, measured at opposite face corners of jambs on parallel lines, and perpendicular to plane of wall.
    4. Plumbness: Plus or minus 1/16-inch, measured at jambs at floor.

3.3 TOUCHUP

A. Touchup damaged finish when the results are satisfactory to the Design Consultant, otherwise return the damaged component to the shop for refinishing.

END OF SECTION

SECTION 08 14 33 - STILE AND RAIL WOOD DOORS

PART 1 - GENERAL

1.1 SUMMARY

A. Section includes factory-painted sliding stile and rail wood doors.
B. Work installed but furnished in other Sections: Division 08 for finish hardware.
C. Related requirements:

1. Division 01 for LEED requirements.
2. Division 06 for wood frames.
3. Division 08 for glass and glazing.

1.2 DEFINITIONS

A. Architectural Woodwork Institute (AWI).
B. Architectural Woodwork Quality Standard (AWQ Standards).

1.3 SUSTAINABLE DESIGN REFERENCE

A. USG Green Building Council (USGBC).

1.4 SUBMITTALS

A. Shop Drawings: Show door elevations and details showing door construction. Dimension hardware location.
B. Data: Manufacturer Product Data for the finish system, and acoustical performance requirements.
C. Samples: Minimum 12-inch wood frame Sample, finished as specified.
D. LEED: LEED certification product data as specified in Section 01 81 13, “Sustainable Design Requirements”, for the following LEED credits:

1. Credit MR 4.1 & 4.2, Recycled Content.
2. Credit MR 5.1, Regional Materials, Manufactured Locally.
3. Credit MR 5.2, Regional Materials, Harvested / Extracted Locally.
4. Credit MR 6, Rapidly Renewable Materials.
5. Credit MR 7, Certified Wood.
6. Credit EQ 4.1, Low Emitting Materials, Adhesives & Sealants.
7. Credit EQ 4.1, Low Emitting Materials, Paints.
8. Credit EQ 4.1, Low Emitting Materials, Composite Wood.

1.5 QUALITY ASSURANCE

A. All stile and rail wood doors for the Project shall be made by the same manufacturer.

1.6 HANDLING

A. Procedure: In accordance with AWIQ Standards~~WI Bulletin No. 416-R~~.
B. Marking: Mark each door on top and bottom rail with opening number used on Shop Drawings.

C. Storage:

1. Store doors in an assigned space having controlled temperature and humidity as recommended by AWIQ Standards.
2. Store doors flat on factory pallets or 3 full 2 by 4s, one centered and the other two 12 inches from each end.
3. Protect doors from construction activity with plywood and store away from direct sunlight.

D. Handling: Do not drag doors across one another.

1.7 JOB CONDITIONS

A. Do not deliver or install doors until conditions for temperature and relative humidity have been stabilized and will be maintained in storage and installation areas during remainder of construction period.
B. Comply with referenced AWI ~~quality~~ Standards including ~~Technical Bulletin 419 for~~ moisture content and relative humidity.

PART 2 - PRODUCTS

2.1 MATERIALS

A. Stile and rail: Structural composite lumber.

1. Grade: Custom.
2. ~~Face~~Veneer:

a. Medium density overlay (MDO).
b. Close grained Maple, Birch or other close-grain hardwood; no horizontal joints

B. Glass and glazing: As specified in Section 08 80 00.

2.2 PERFORMANCE REQUIREMENTS

A. Acoustical ratings: TBD.

2.3 DOOR CONSTRUCTION

A. General:

1. Construct doors in accordance with the ~~referenced~~ section 1400 of thee AWQ ~~WDMA~~ Standards to profiles and dimensions indicated and as follows.
2. Join stile and rail with fully glued mortise and tenon construction.
3. Finish faces true, with stile and rail intersections and other copes well fitted, with stickings clean cut and smooth.
4. Sand doors smooth, ready for finishing.

2.4 FACTORY-MACHINING/FINISHING

A. Factory-machine doors by manufacturer or qualified distributor for locks and hardware requiring routing or mortising. Refer to Article 3.2 below for door clearances.

B. Complete fabrication, including fitting doors for openings and machining for hardware that is not surface applied, before finishing.

1. Finish faces, all four edges, edges of cutouts, and mortises.
2. Finish doors at factory in accordance with section 1500 of the AWS Standard, with a pre-or post-catalyzed lacquer, or a conversion varnish.~~where indicated in schedules or on Drawings as factory-finished~~.

a. Colors: ~~TBD.~~Color selected by the Design Consultant.
b. Sheen: ~~TBD.~~Low sheen as selected by the Design Consultant.

PART 3 - EXECUTION

3.1 EXAMINATION

A. Examine frames, adjacent construction and supports.
B. Verify that openings are within allowable tolerances, plumb, level, clean.
C. Correct detrimental conditions before proceeding with installation.

3.2 INSTALLING FINISH HARDWARE/HANGING DOORS

A. Install finish hardware in compliance with its manufacturer's instructions and the requirements of Section 08 71 00.

1. Fit accurately to doors.
2. Locate as specified for steel doors in Section 08 11 14.

B. Condition doors to average prevailing humidity in installation area prior to hanging.
C. Bevel door stile 1/8 inch in 2 inches. Accurately fit doors to frames with clearances not exceeding 1/8 inch at lock.
D. Install doors to operate freely for their entire travel, but not loosely, without sticking or binding, with all hardware adjusted and functioning properly.

3.3 REPLACING DAMAGED DOORS

A. Replace doors showing chips, scratches, glue stains, excessive warp or other damage that cannot be satisfactorily repaired, as determined by the Design Consultant, with acceptable doors.

END OF SECTION

SECTION 08 14 16 - FLUSH WOOD DOORS

PART 1 - GENERAL

1.1 SUMMARY

A. Section includes:

1. Factory-painted, flush, hinged wood doors.
2. Factory-painted sliding wood barn doors.
3. Pocket doors.
4. Vision panel frames in wood doors.

B. Work installed but furnished in other Sections: Division 08 for finish hardware.

C. Related requirements:

1. Division 01 for LEED requirements.
2. Division 06 for wood trim.
3. Division 08 for glazing vision panels in wood doors.
4. Division 09 for finish painting wood doors schedule to receive an opaque finish.

1.2 SUSTAINABLE DESIGN REFERENCE

A. USG Green Building Council (USGBC).

1.3 SUBMITTALS

A. Shop Drawings:

1. Door schedule indicating opening identifying number, door type, grade, size, thickness, swing, label requirements, and undercuts.
2. Door elevations indicating hand of each door, and type of construction, and conditions at cutouts for vision panels.
3. Prefitting and premachining requirements, including dimensions and locations of mortises and holes for hardware.
4. Rating for fire-rated doors.
5. Use same reference numbers for openings and details as Contract Drawings.

B. Certificate: Manufacturer’s certificate showing door compliance with these Specifications and the AWI.

C. LEED: LEED certification product data as specified in Section 01 81 13, “Sustainable Design Requirements” for the following LEED credits:

1. Credit MR 4.1 & 4.2, Recycled Content.
2. Credit MR 5.1, Regional Materials, Manufactured Locally.
3. Credit MR 5.2, Regional Materials, Harvested / Extracted Locally.
4. Credit MR 6, Rapidly Renewable Materials.
5. Credit MR 7, Certified Wood.
6. Credit EQ 4.1, Low Emitting Materials, Adhesives & Sealants.
7. Credit EQ 4.1, Low Emitting Materials, Paints.
8. Credit EQ 4.1, Low Emitting Materials, Composite Wood.

D. Warranty: Warranty form from the door manufacturer.

1.4 QUALITY ASSURANCE

A. Regulatory requirements:

1. Fire-rated doors shall be listed by a nationally recognized testing and certification agency acceptable to authorities having jurisdiction. The listed doors shall meet or exceed the requirements of UL10B, NFPA 252 and NFPA 80. Doors requiring fire-rating shall carry either a UL or ITS (Intertek Testing Services-Warnock Hersey) label.
2. Comply with CBC requirements. Provide tested products that have passed as an assembly in compliance with CBC Standard 7-2 positive pressure smoke testing requirements.
3. Comply with ASTM E 2074, Standard Test Method for Fire Tests of Door Assemblies, Including Positive Pressure on Side-Hinged and Pivoted Swinging Door Assemblies.

B. Uniformity: the same manufacturer shall make all wood doors for the Project.

1.5 HANDLING

A. Procedure: In accordance with WI Bulletin No. 416-R and Recommended Handling and Finishing Instructions for Wood Fire Doors.
B. Marking: Mark each door on top and bottom rail with opening number used on shop drawings.
C. Delivery:

1. Deliver doors factory-wrapped in polyethylene bags, unitized and palletized. Shrink-wrap each pallet and provide corner guards for protection.
2. Mark each door with architectural opening number in distribution and installation.
3. Do not deliver doors to the Project until proper storage space is available.

D. Storage:

1. Store doors in an assigned space having controlled temperature and humidity as recommended by WI.
2. Store doors flat on factory pallets.
3. Protect doors from construction activity and store away from direct sunlight.

E. Handling:

1. Handle doors with clean hands.
2. Do not drag doors across one another.
3. When provided, maintain factory packaging or other means of protection of doors until Substantial Completion.

1.6 JOB CONDITIONS

A. Do not deliver or install doors until conditions for temperature and relative humidity have been stabilized and will be maintained in storage and installation areas during remainder of construction period.
B. Comply with referenced WI quality standard including Technical Bulletin 419 for moisture content and relative humidity.

1.7 WARRANTY

A. Special warranty:

1. Furnish to the City the door manufacturer written warranty against doors delaminating, telegraphing core through face veneer and against non-conformance with tolerance limitations of referenced quality standards for life of the installation.
2. Include reinstallation that may be required due to repair or replacement of defective doors, during the warranty period, when defect was not apparent prior to hanging.

PART 2 - PRODUCTS

2.1 MANUFACTURERS

A. One of the following, or equal:

1. Algoma Hardwoods, Inc.
2. Buell Door Co.
3. Eggers Industries.
4. Weyerhaeuser Co., Los Angeles, Ca.
5. Or equal.

2.2 DOORS

A. Flush wood doors - general: The following complying with the Woodwork Institute, Architectural Woodwork Quality Standards, section 1300, "Custom Grade", ~~AWS "Extra Heavy Duty"~~ classification.

B. Non-rated doors:

1. Grade: Custom.
2. Face: One of the following; provide same face veneer for all doors.

   a. Medium density overlay (MDO).
   b. Close grained Maple, Birch or other close-grain hardwood; no horizontal joints.

3. Core: SCLC.

C. Labeled, flush, fire-rated doors complying with Code as follows. Provide concealed (built-in blockings) for all hardware; thru bolting (Chicago fasteners) are not acceptable.

1. Grade: Custom.
2. Face: As scheduled and specified for non-rated doors above.
3. Core: As required to meet fire rating.
4. Fire seals: Category A~~[**incorporated – concealed or visible**]~~ ~~[~~Category B surface applied seal~~]~~.
5. Fire ratings: As scheduled.
6. Acoustical ratings: TBD.

2.3 ACCESSORIES

A. Vision panel frame: The following, or equal low profile, factory-primed, UL listed and labeled where installed in fire-rate doors.

1. Model FGS-75 by Anemostat Door Products.
2. Model VLF by Air Louvers, Inc.
3. Or equal.

B. Metal edge and astragal: Refer to Section 08 71 00~~10-gage stainless steel, type 304, with No. 4 finish~~.

~~1.Equip pairs of labeled doors with overlapping full height astragal and metal edges to meet label requirements; apply astragal on inactive leaf pre-drilled for screws and pre-machined for specified hardware.~~

C. Metal frames for light openings: 18-gage, cold rolled steel sheet, factory-primed for paint finish.
D. Miscellaneous: For fire-rated wood doors provide beads and clips approved for such use.
E. Acoustic seals: TBD.

2.4 FACTORY-MACHINING/FINISHING

A. Factory-machine doors by manufacturer or qualified distributor for cutouts, hinges, louvers, vision panels, locks and all hardware requiring routing or mortising.

1. When machining labeled doors comply with UL 10C and use caution to avoid voiding the manufacturer warranty.
2. Refer to Article 3.2 below for door clearances.

B. Prepare doors to receive finish hardware as follows:

1. Pilot drill screw and bolt holes.
2. Rout-out hinge locations.
3. Bore accurately for locks and latches.
4. Locate hardware where indicated on the Drawings.

~~2.5FACTORY-MACHINING/FINISHING~~

~~A.Factory-machine doors by manufacturer or qualified distributor for locks and hardware requiring routing or mortising. Refer to Article 3.2 below for door clearances.~~
~~B.~~C. Complete fabrication, including fitting doors for openings and machining for hardware that is not surface applied, before finishing.

~~1.~~Finish faces, all four edges, edges of cutouts, and mortises.

1. Factory-finish the work of this Section as follows.

2. Finish doors with an AWS “Conversion Varnish” or “Catalyzed Lacquer” to match approved Samples and mockup.
~~2.Finish doors at factory where indicated in schedules or on Drawings as factory finished.~~

~~a.Colors: TBD.~~
~~b.Sheen: TBD.~~

PART 3 - EXECUTION

3.1 EXAMINATION

A. Examine frames, adjacent construction and supports.
B. Verify that openings are within allowable tolerances, plumb, level, clean, will provide a solid anchoring surface.
C. Correct detrimental conditions before proceeding with installation.

3.2 INSTALLING FINISH HARDWARE/HANGING DOORS

A. Install finish hardware in compliance with its manufacturer's instructions and the requirements of Section 08 71 00. Fit accurately to doors.
B. Condition doors to average prevailing humidity in installation area prior to hanging.
C. Install vision panels square and parallel with door edges, with flush, hairline joints and fasten securely with concealed fasteners unless otherwise acceptable to the Design Consultant.
D. Factory-fit doors to suit frame opening sizes indicated, with uniform clearances and bevels. Comply with clearance requirements of referenced quality standard for fitting. Comply with requirements in NFPA 80 for labeled doors.

   1. Trim non-fire rated doors by cutting equally at both edges.
   2. Trim door height by cutting bottom edge, maximum 3/4-inch; trim fire rated doors at bottom edges only, in accordance with fire rating requirements

E. Hang doors to operate freely for their entire travel, but not loosely, without sticking or hinge binding, with all hardware adjusted and functioning properly.

3.3 REPLACING DAMAGED DOORS

A. Replace doors showing chips, scratches, unbonded face veneers, glue stains, excessive warp or other damage that cannot be satisfactorily repaired, as determined by the Design Consultant, with acceptable doors.

END OF SECTION

SECTION 08 31 16 - ACCESS DOORS & PANELS

PART 1 - GENERAL

1.1 SUMMARY

A. Section includes access panels not provided by other trades, but required for access to concealed equipment and assemblies.
B. Work installed but not supplied under this Section: Access panels furnished by other trades.
C. Related requirements:

1. Division 01 for LEED requirements.
2. Division 09 for the following:

a. Finish painting access panels.
b. Access panels in acoustical ceilings.

3. Other Divisions for furnishing access panels to be installed under this Section.

1.2 SUSTAINABLE DESIGN REFERENCE

A. USG Green Building Council (USGBC).

1.3 ADMINISTRATIVE REQUIREMENTS

A. Field verification: Verify actual locations of supports by field measurements and indicate measurements on Shop Drawings. Coordinate tolerances of other trades that may affect the work of this Section prior to start of Shop Drawings.
B. Pre-installation Meeting:

1. Prior to start of work, arrange for Project site meeting of all parties associated with work of this Section, trades whose work affect the work of this Section, and trades whose work will be affected by the work of this Section.
2. Meeting shall be attended by the Contractor, firm installing the access doors (if more than one firm, than each one shall attend), trade responsible for substrates and supports to which access doors are installed, and access door manufacturer representatives.
3. Resolve conflicts and issue minutes of the meeting to all present and the Design Consultant within 5 days of the meeting.

C. Sequencing:

1. Coordinate installation and cooperate with mechanical and electrical trades.
2. Coordinate stud layout and other support locations to provide a firm support for the panel frame.

1.4 SUBMITTALS

A. Data: The following manufacturer Product Data.

1. For each type of door and frame indicated, including compliance with Code requirements for those in fire-resistive assemblies.
2. Include construction details relative to materials, individual components and profiles, finishes, and fire ratings for access doors and frames.

3. Supplement with Shop Drawings as follows:

   a. Submit dimensioned plan and elevation of each access panels in areas accessible to the public. Panel location is subject to relocation within 10 feet of location proposed by the Contractor, as requested by the Design Consultant, at no cost to the City.
   b. Show special installation conditions.

B. Shop Drawings:

   1. Show fabrication and installation details of customized doors and frames.
   2. Include plans, elevations, sections, details, and attachments to other Work. Superimpose plan location on piping layout shop drawings.

C. Coordination drawings: Reflected ceiling plans drawn to scale, coordinating penetrations and ceiling-mounted items with concealed framing, suspension systems, piping, ductwork, and other construction. Show the following.

   1. Method of attaching door frames to surrounding construction.
   2. Ceiling-mounted items including access doors and frames, lighting fixtures, diffusers, grilles, speakers, sprinklers, and special trim.
   3. Unless otherwise accepted by the Design Consultant, no access panels will be allowed in hard ceilings (plaster and gypsum board) in public, and semi-public areas.

D. Samples: Samples for each door face material, at least 3 by 5 inches, in specified finish.
E. Schedule: Complete schedule of access panels, including types, general locations, sizes, construction details, latching or locking provisions, and other data pertinent to installation.
F. LEED: LEED certification product data as specified in Section 01 81 13, “Sustainable Design Requirements” for the following LEED credits:

   1. Credit MR 4.1 & 4.2, Recycled Content.
   2. Credit MR 5.1, Regional Materials, Manufactured Locally.
   3. Credit MR 5.2, Regional Materials, Harvested / Extracted Locally.
   4. Credit MR 6, Rapidly Renewable Materials.
   5. Credit EQ 4.1, Low Emitting Materials, Adhesives & Sealants.
   6. Credit EQ 4.1, Low Emitting Materials, Paints.

G. Closeout: Keys properly tagged.

1.5 QUALITY ASSURANCE

A. All access panels for the Project shall be made by the same manufacturer.
B. In fire-resistive construction, provide fire-resistive assemblies bearing the label of a testing agency acceptable to the Building Department for the fire resistance indicated.

PART 2 - PRODUCTS

2.1 ACCESS PANELS

A. Manufacturers:

   1. Babcock/Davis.
   2. Bilco.
   3. Nystrom (basis of design).
   4. Elmdor Manufacturing Co.

5. JL Industries.
6. Karp Associates, Inc.
7. Inrico/Milcor.
8. Williams Brothers Corp.
9. Or equal.

B. Models:

1. In interior plaster and gypsum board surfaces, except as specified below for toilet room walls: Nystrom Type NW.

   a. Material: Commercial grade cold-rolled steel with 16-gage (0.053 inch) frame and 14-gage (0.067 inch) door.
   b. Trim: 22-gage (0.0299 inch) steel drywall bead.

2. In exterior plaster surfaces: Nystrom Type RP where the door is plastered; Type NP where door is painted.

   a. Material: Commercial grade cold-rolled steel with 16-gage (0.053 inch) frame and 14-gage (0.067 inch) door.
   b. Trim: 22-gage (0.0299 inch) steel plaster bead with expanded metal lath.

3. Toilet rooms walls: Nystrom Type NT.

   a. Material: Stainless steel, 16-gage (0.053 inch) frame and 14-gage (0.067 inch) door.
   b. Trim: 22-gage (0.0299 inch) stainless steel drywall bead.

4. In fire-resistive assemblies: Nystrom Type IW or IP as required by surrounding material.

   a. Material: Commercial grade cold-rolled steel with 16-gage (0.053 inch) frame and 20-gage (0.032 inch) door.
   b. Insulation: 2-inch thick fire-resistive insulation sandwiched between the faces.
   c. Trim: 22-gage (0.0299 inch) steel drywall bead or plaster casing bead, as required by job conditions.

5. Size: Unless otherwise indicated on the Drawings, provide minimum size to be 12-inch square opening for hand access; minimum 18-inch square for valve and actuator access; and 24-inch square for equipment access.
6. Where door cannot swing open, provide lift off type with safety wire or chain; Similar to Karp Type DSC-212.
7. ~~In elevator shaft(s), provide self-closing, self-locking access door operable from the inside without a key.~~

C. Provide trimless, prime-coated units, except where stainless steel is specified, equipped with flush, key-operated cam lock.

2.2 MATERIALS

A. General:

1. Provide sheet metal selected for its surface flatness, smoothness and absence of surface blemishes where exposed to view.
2. Do not use materials where exposed surfaces exhibit pitting, seam marks, roller marks, variations in flatness exceeding those permitted by referenced standards for stretcher-leveled metal sheet, stains, discoloration or other imperfections.

B. Galvanized steel sheet: ASTM A 653 CQ (commercial quality), or ASTM A 653 LQ (lock-forming quality), coating designation G90, mill-phosphatized, stretcher-leveled.
C. Steel sheet: Commercial quality cold-rolled carbon steel sheet, stretcher-leveled, complying with the following requirements at the fabricator's option.

1. Electrolytic zinc-coated steel sheet: ASTM A 591, with Class C zinc coating; chemically treated in mill with phosphate solution and light chromate rinse.
2. Cold-rolled steel sheet: ASTM A 1008.

D. Stainless steel sheet: ASTM A 167, Type 302 or 304, stretcher-leveled.
E. Hardware:

1. Hinges: Concealed spring hinges or concealed continuous piano hinge set to open 175-degree. For fire-resistive units, provide self-closing mechanism.
2. Locking device: Flush, screwdriver-operated cam lock of number required to hold door in flush, smooth plane when closed.

a. ~~In public areas,~~ Provide keyed-alike cylinder lock on all access panels. Furnish 2 keys per lock.
b. For recessed panel, provide access sleeves for each locking device. Provide plastic grommets installed in holes cut through finish.
c. For locks on panels 24 inches in any dimension, provide interior latch mechanism to allow door to be opened from the inside without a key.

2.3 FABRICATION

A. Fabricate to profiles indicated without exposed cut edges.
B. Produce flat, flush surfaces without cracking and grain separation at bends.
C. Continuously weld exposed joints and seams; grind, fill, and dress welds to produce smooth flush exposed surfaces in which welds are invisible after final finishing is completed.
D. Provide exterior access panels with weatherproof extruded door gasket.
E. Finish:

1. When installed in ceramic tile surfaces, provide stainless steel panels finished with a NAAMM No. 4 (brushed) finish.
2. When installed in an exterior wall or soffit, fabricate assemblies from commercial quality carbon steel sheets complying with ASTM A 653 CQ, hot-dip galvanized to comply with ASTM A 924, G90, or hot-dip galvanize after fabrication to provide an equivalent zinc coating weight.
3. Elsewhere provide access panels with a baked-on rust-inhibitive primer.

F. Identification: Mark inside surface of access doors with colored dot in accordance with the following color code.

1. Domestic Cold Water: Yellow.
2. Domestic Hot Water and Return: Yellow.
3. Fire Protection: Red.
4. Waste and Vent: Green.
5. Interior Rainwater Leaders: Green.
6. Natural Gas: Yellow.
7. Condensate: Green.

PART 3 - EXECUTION

3.1 EXAMINATION

A. Examine adjacent construction and supports.
B. Verify that openings are properly framed, within allowable tolerances, plumb, level, clean, will provide a solid anchoring surface.
C. Correct detrimental conditions proceeding with installation.

3.2 INSTALLATION

A. Install plumb, level, and square with adjacent construction.
B. Attach assemblies securely to supports.
C. When installed in ceramic tile surfaces, coordinate panel location with the tilework so that the panel will align and fit within the tile module with no tile cutting, or a minimum of cutting.

3.3 FIELD QUALITY CONTROL

A. Adjust hardware for proper function so panels operate freely, but not loosely, without sticking or hinge binding.

END OF SECTION

SECTION 08 32 00 – MULTI-PANEL SLIDING GLASS DOORS

PART 1 - GENERAL

1.1 SUMMARY

A. Section includes exterior aluminum-framed, multi-panel sliding glass door system complete with hardware at the exterior south elevation of the Community Room,

B. Related requirements:

1. Division 01 for LEED requirements.
2. Other Sections of Division 08 for the following.
   a. Aluminum storefronts and their entrances.
   b. Aluminum windows.
   c. Glass and glazing.

1.2 SUSTAINABLE DESIGN REFERENCE

A. USG Green Building Council (USGBC).

1.3 ADMINISTRATIVE REQUIREMENTS

A. The work of this Section requires deferred approval and delegates design to the Contractor, It is not fully detailed on the Drawings, which indicate desired profile and design intent, and it has not been engineered

1. The Contractor is responsible for engineering, fabrication and installation of the doors to withstand loads and other criteria prescribed by Code, indicated, and specified, within the physical limitations indicated on the Drawings.
2. A California-licensed professional engineer employed by the Contractor shall prepare drawings and calculations for this work. Drawings and calculations, as specified above, shall be sealed and signed by the Contractor's design engineer.

~~A.Deferred approval: The work of this Section requires deferred approval (delegated design), including comprehensive engineering analysis by a qualified professional engineer using performance requirements and design criteria indicated.~~

B. Pre-installation meeting:

1. Prior to start of installation, arrange a pre-installation meeting between the door manufacturer's authorized representative, the Contractor, the installer, the glazier, and the Design Consultant to review the Drawings and Specifications, the door, glass and sealants manufacturers' data, and conditions of opening to receive the work of this Section, as well as other conditions that would affect the quality of this work.
2. If more than one trade will be responsible for the successful performance of the work of this Section, these trades shall attend the meeting.
3. Review all typical and atypical details to verify the method(s) of installation that the Contractor intends to follow, as well as corrective actions that are required.
4. Special conditions not specifically referenced or addressed by the Project Drawings, manufacturer's typical details, or the Shop Drawings, shall also be identified, reviewed and discussed.

5. Take photographs and notes of unresolved conditions, if any, along with sketches of the same unresolved conditions to determine what actions need to be taken to assure an installation that will meet the requirements of the Contract Documents, and will be acceptable to the assembly/material manufacturer to issue the warranties specified.
6. Record meeting minutes and distribute electronic copy to attendees and others concerned, within 7 days after the meeting.

1.4 SUBMITTALS

A. Data: Manufacturer product data for door, including the following.

1. Construction details and fabrication methods.
2. Profiles and dimensions of individual components.
3. Data on hardware, accessories, and finishes.

B. Shop drawings: Large scale, dimensioned shop drawings: Include information not fully detailed in manufacturer's standard product data and the following.

1. Layout and installation details, including anchors.
2. Elevations of units at 3/4-inch scale.
3. Full-size section details of typical composite members, including reinforcement.
4. Hardware ~~including operators~~.
5. Glazing details.
6. Accessories.

C. Samples: 12-inch long sections of door frame with specified finish. Full size Samples of hardware, except make track Samples 12 inches long. Where finish involves normal color variations, include sample sets showing the full range of variations expected.

D. Certification:

1. Certification by a recognized independent testing laboratory or agency showing that each type, grade, and size of unit complies with performance requirements indicated.
2. Where reports are not available, engage a recognized independent testing laboratory or agency to perform tests specified. Provide certified test results showing that unit complies with performance requirements indicated.

E. LEED: LEED certification product data as specified in Section 01 81 13, “Sustainable Design Requirements”, for the following LEED credits:

1. Credit MR 4.1 & 4.2, Recycled Content.
2. Credit MR 5.1, Regional Materials, Manufactured Locally.
3. Credit MR 5.2, Regional Materials, Harvested / Extracted Locally.
4. Credit MR 6, Rapidly Renewable Materials.
5. Credit EQ 4.1, Low Emitting Materials, Adhesives & Sealants.
6. Credit EQ 4.1, Low Emitting Materials, Paints.

F. Closeout: Recommendations for maintenance and cleaning of surfaces.

1.5 QUALITY ASSURANCE

A. Installer qualifications: Firm who has completed installation of sliding glass doors similar in design and extent to those required for the Project and whose work has resulted in construction with a record of successful in-service performance.

B. Standards: Requirements for doors, terminology and standards of performance, and fabrication workmanship are those specified and recommended in AAMA 101 and applicable general recommendations published by AAMA.

C. Professional engineer qualifications:

1. Professional engineer legally qualified to practice in California and experienced in providing engineering services of the kind indicated.
2. Engineering services are defined as those performed for installations of skylight that are similar to those indicated for the Project in material, design, and extent.

D. Testing agency qualifications: Independent testing agency with the experience and capability to conduct the testing indicated, as documented according to ASTM E 548.

E. Welding: Qualify procedures and personnel according to AWS D1.2, "Structural Welding Code - Aluminum".

~~C.Single source responsibility: Provide all sliding aluminum doors from one source and produced by a single manufacturer.~~

F. Labeling: Permanently attached AAMA/NWWDA 101/I.S.2.

1.6 HANDLING

A. Transport, store and handle assemblies to prevent damage. Store off the floor in a protected location.

PART 2 - PRODUCTS

2.1 MANUFACTURERS

A. Fleetwood Aluminum Products (basis of design).
B. Arcadia, Inc.
C. Or equal.

2.2 MODEL

A. Fleetwood “Norwood” series 3070-EX.

2.3 PERFORMANCE REQUIREMENTS

A. General: Provide assembly that complies with performance requirements specified, as demonstrated by testing manufacturer's corresponding stock systems according to test methods indicated.

B. Design criteria:

1. Comply with structural performance, air infiltration, and water penetration requirements indicated in AAMA/NWWDA 101/I.S.2, to the minimum standard of an SGD-C30 rating.
2. Refer to the Structural Drawings for design wind velocity at the Project site.
3. Seismic load: As indicated.
4. Comply with ADA requirements.

C. Thermal movement:

1. Base movements for a minimum material temperature increase of 100 degrees F and decrease of 50 degrees F relative to time of installation.

2. For thermal design, the design winter surface temperature shall be plus 30 degrees F.
3. The design summer surface temperature shall be at least 180 degrees F.
4. Components including adhesive and sealants shall be capable of withstanding without failure design winter temperature to design summer temperature with simultaneous specified loads.
5. Assume a building interior temperature range of 50 to 80 degrees F.

D. Forced-entry resistance: Provide units that comply with Code.
E. Movements of supporting structure including, but not limited to, story drift and deflection from uniformly distributed and concentrated live loads.
F. Dimensional tolerances of building frame and other adjacent construction.

2.4 PERFORMANCE REQUIREMENTS

A. General: Doors shall withstand the effects of the loads and movements specified without exceeding performance criteria and without failure due to defective manufacture, fabrication, installation, or other defects in construction, based on testing manufacturer standard units in assemblies similar to those indicated for the Project.

1. Failure includes the following:

a. Deflection exceeding specified limits.
b. Thermal stresses transferring to building structure.
c. Framing members transferring stresses, including those caused by thermal and structural movements to glazing.
d. Glazing-to-glazing contact.
e. Noise or vibration created by wind and by thermal and structural movements.
f. Loosening or weakening of fasteners, attachments, and other components.
g. Sealant failure.
h. Failure of operating units.

2. Deflection of framing members:

a. Deflection normal to wall plane: Limited to edge of glass in a direction perpendicular to glass plane shall not exceed L/175 of the glass edge length for each individual glazing lite or an amount that restricts edge deflection of individual glazing lites to 3/4 inch, whichever is less.
b. Deflection parallel to glazing plane: Limited to L/360 of clear span or 1/8 inch, whichever is smaller, but in no case by an amount which reduces glazing bite to less than 75 percent of design dimension and that which reduces edge clearance between framing members and glazing or other fixed components directly below them to less than 1/8 inch and clearance between members and operable units directly below them to less than 1/16 inch.

B. Structural-test performance: Provide assemblies, including anchorage, capable of withstanding wind-load design pressures indicated on the Structural Drawings, acting inward and outward. Demonstrate structural adequacy of assemblies by testing according to ASTM E 330 as follows.

1. When tested at positive and negative wind-load design pressures, systems shall not evidence deflection exceeding specified limits.
2. When tested at 150 percent of positive and negative wind-load design pressures, systems, including anchorage, shall not evidence material failures, structural distress, and permanent deformation of main framing members exceeding 0.2 percent of span.
3. Test durations: As required by design wind velocity but not fewer than 10 seconds.

C. Live loads: Provide assemblies, including anchorage, that accommodate the supporting structure deflection from uniformly distributed and concentrated live loads indicated without failure of materials or permanent deformation.
D. Movements of the structural-supports: Provide assemblies that accommodate structural movements including, but not limited to sway and deflection.
E. Drift: Provide assemblies that accommodate design displacementindicated.

1. Test performance: Meet criteria for passing, based on building occupancy type, when tested according to AAMA 501.4 at design displacement and 1.5 times design displacement.

F. Air infiltration and water penetration under static pressure: Complyw with AAMA/NWWDA 101/I.S.2.
G. Thermal movements: Provide assemblies that allow for thermal movements resulting from the specified maximum change (range) in ambient and surface temperatures. Base engineering calculation on surface temperatures of materials due to both solar heat gain and nighttime-sky heat loss.

1. Test performance: No buckling; stress on glass; sealant failure; excess stress on framing, anchors, and fasteners; or reduction of performance when tested according to AAMA 501.5.

H. Condensation resistance: Provide assemblies with fixed glazing and framing areas having condensation-resistance factor (CRF) of not less than 45 when tested according to AAMA 1503.
I. Sound transmission: Provide doors having the following sound-transmission characteristics when closed.

1. Sound transmission class (STC): Minimum [26] [30] [35] STC when tested for laboratory sound transmission loss according to ASTM E 90 and determined by ASTM E 413.
2. Outdoor-indoor transmission class (OITC): Minimum [26] [30] [34] OITC when tested for laboratory sound transmission loss according to ASTM E 90 and determined by ASTM E 1332.

J. Load transfer: Framing members shall not transfer stresses, including those caused by thermal and structural movement, to glazing units.
K. Glazing: Physically and thermally isolate glazing from framing members.
L. Dimensional tolerances: Provide assemblies that accommodate dimensional tolerances of building frame and other adjacent construction.

2.5 MATERIALS/COMPONENTS

A. Aluminum: Alloy and temper recommended by the manufacturer for strength and application of required finish, complying with ASTM B 221 for extrusions and ASTM B 209 for sheet or plate.
B. Hardware:

1. Rollers: Adjustable stainless steel with ball bearings and tandem carriage.
2. Roller track: 24-gage stainless steel designed to seat securely in the sill.
3. Locking mechanism: Heavy duty stainless steel hook bolt.
4. Pull handle: ADA-compliant.

C. Fasteners: Aluminum, non-magnetic stainless steel, epoxy adhesive, or other materials warranted by the manufacturer to be non-corrosive and compatible with aluminum members, trim, hardware, anchors, and other components of units.

1. Reinforcement: Where fasteners screw-anchor into aluminum less than 0.125-inch thick, reinforce the interior with aluminum or non-magnetic stainless steel to receive screw threads, or provide standard non-corrosive pressed-in splined grommet nuts.
2. Exposed fasteners: Except where unavoidable for application of hardware, do not use exposed fasteners. For the application of hardware, use fasteners that match the finish of member or hardware being fastened.

    a. Provide Phillips flat-head machine screws for exposed fasteners.

D. Anchors, clips, and accessories: Fabricate of aluminum, non-magnetic stainless steel, hot-dip zinc-coated steel or iron, complying with the requirements of ASTM B 633; provide sufficient strength to withstand design pressure indicated.
E. Compression weatherstripping: Manufacturer's standard replaceable compressible weatherstripping gaskets of molded neoprene complying with ASTM D 2000 or molded PVC complying with ASTM D 2287.
F. Sliding weatherstripping: Manufacturer's standard replaceable weatherstripping of wool, polypropylene, or nylon woven pile, with nylon fabric or aluminum strip backing, complying with AAMA 701.2.
G. Glass and glazing materials: As indicated and specified in Section 08 80 00.
H. Sealants and backup rods:

1. Within assemblies: Manufacturer's standard non-drying, non-skinning sealant complying with AAMA 809.2.
2. Between assemblies and adjacent materials: As specified in Section 07 92 00.
3. Glazing sealants: Refer to Section 08 80 00.

I. Glazing gaskets: Manufacturer standard black gaskets.
J. Hardware: Manufacturer standard hardware fabricated from aluminum, stainless steel, or other corrosion-resistant material compatible with aluminum and of sufficient strength to perform the function for which it is intended.

~~K.Insect screens:~~

~~1.Design door and hardware to accommodate screen in a tight-fitting, removable arrangement, with a minimum of exposed fasteners and latches. Locate screen on outside of door assembly and provide for each operable panel.~~
~~2.Aluminum wire fabric screen, charcoal gray 18-by-16 mesh of 0.011-inch diameter, coated aluminum wire.~~
~~3.Extruded-aluminum or aluminum tubular framing sections not less than 0.050-inch wall thickness.~~

2.6 FABRICATION

A. Doors:

1. Fabricate frame and sash square, without rack, and with flush, hairline joints.
2. Equip ventilators with weatherstripping to prevent water and air infiltration.

~~B.Screens:~~

~~1.Assemble aluminum framing sections with flush, hairline, mitered, reinforced corners.~~
~~2.Insert screen in frame groove and stretch taut. Lock in place with continuous spline.~~
~~3.Finish: Match aluminum door members.~~

B. Finish:

1. Sight-exposed aluminum surfaces: Finish as specified in Section 08 43 23.
2. Steel brackets: Prime with rust-inhibitive primer.

C. Glazing: Factory-glaze doors. Comply with glass manufacturer's recommendations and requirements of Section 08 80 00.

PART 3 - EXECUTION

3.1 EXAMINATION

A. Examine adjacent construction and supports.
B. Verify that openings are within allowable tolerances, plumb, level, clean, will provide a solid anchoring surface.
C. Correct detrimental conditions before proceeding with installation.

3.2 INSTALLATION

A. Do not install components that are bowed, dented, abraded, broken or otherwise defective.
B. Install doors level, plumb, square and with tight fitting joints. Attach to supporting construction with non-staining and non-corrosive shims, anchors, fasteners and spacers.
C. Install sills in a full bed of sealant.
D. Separate aluminum and other corrodible surfaces from sources of corrosion or electrolytic action at points of contact with other materials by complying with the requirements specified under "Dissimilar Materials" in the Appendix to AAMA 101.
E. Provide all accessories such as fasteners, sealants and concealed anchorage needed for a complete, weatherproof installation.

3.3 ADJUSTING

A. Adjust operating components to provide a tight fit at contact points and weatherstripping for smooth operation and weathertight closure.
B. Weatherstrips shall not bind or prevent sash or ventilator from closing easily and tight with weathertight contact between metal.
C. Lubricate hardware and moving parts.

3.4 FIELD QUALITY CONTROL & CLEANING

A. Clean aluminum surfaces immediately after installing sliding aluminum-framed glass doors. Avoid damaging finish.
B. Remove protective coating and excess glazing and sealants, dirt, and other substances.
C. Clean glass immediately after installing doors. Comply with manufacturer's recommendations for final cleaning and maintenance. Remove nonpermanent labels from glass surfaces.
D. Remove and replace glass broken, chipped, cracked, abraded, or damaged during the construction period.

END OF SECTION

SECTION 08 33 23 - OVERHEAD COILING DOOR

PART 1 - GENERAL

1.1 SUMMARY

A. Section includes interior motorized overhead coiling door complete with hardware, operators and accessories.
B. Related Requirements:

1. Division 01 for LEED requirements.
2. Division 09 for access flooring substrate.
3. Division 26 for power and disconnect switch for door motors, and conduits between motors and controls.
4. Division 28 for security system.

1.2 SUSTAINABLE DESIGN REFERENCE

A. USG Green Building Council (USGBC).

1.3 SUBMITTALS

A. Data: Manufacturer Product Data, including specifications, installation diagrams, and installation instructions.
B. Seismic Qualification Certificate: For overhead coiling door**,** accessories, and components, from manufacturer.
C. Shop drawings:

1. Submit for special components and installation conditions not fully dimensioned or detailed on manufacturer's data sheets.
2. Show attachment details to support and interface with adjacent construction.
3. Show location of replaceable fusible link.
4. Include wiring diagrams for power, signal and controls.

D. Wiring diagrams: Detail wiring for power, signal, and control systems. Differentiate between manufacturer-installed and field-installed wiring and between components provided by door manufacturer and those provided by other trades.
E. Samples: Submit door manufacturer’s standard size Samples for each type of exposed finish
F. Installer certificates: Signed by manufacturer certifying that installer complies with specified requirements.
G. LEED: LEED certification product data as specified in Section 01 81 13, “Sustainable Design Requirements”, for the following LEED credits.

1. Credit MR 4.1 & 4.2, Recycled Content.
2. Credit MR 5.1, Regional Materials, Manufactured Locally.
3. Credit MR 5.2, Regional Materials, Harvested / Extracted Locally.
4. Credit MR 6, Rapidly Renewable Materials.
5. Credit EQ 4.1, Low Emitting Materials, Adhesives & Sealants.
6. Credit EQ 4.1, Low Emitting Materials, Paints.

H. Closeout submittals: Operating and maintenance instructions for the door.

1.4 QUALITY ASSURANCE

A. Installer qualifications: Manufacturer authorized representative trained and approved for both installation and maintenance of unit required for this Project.
B. Source limitation: Obtain operator and controls from overhead coiling door manufacturer.
C. Fire-test-response characteristics:

1. Provide assembly complying with NFPA 80 that is identical to assembly tested for fire-test-response characteristics per UL 10b and NFPA 252, and that is listed and labeled for fire ratings indicated by UL, FMG, ITS, or another testing and inspecting agency acceptable to authorities having jurisdiction.
2. For unit exceeding sizes of tested assemblies, provide certification by a testing agency, acceptable to Authorities Having Jurisdiction, that door complies with standard construction requirements of tested and labeled fire-rated door assembly except for size.

D. Electrical components, devices, and accessories: Listed and labeled as defined in NFPA 70, Article 100.

1.5 HANDLING

A. Protect materials from damage during shipping and storage.

1.6 SPECIAL WARRANTY

A. Door manufacturer shall warrant door assembly against defects in workmanship and materials for 2 years from date of Substantial Completion

PART 2 - PRODUCTS

2.1 MANUFACTURERS

A. Cookson Co.
B. Cornell Iron Works.
C. Overhead Door Corp.
D. Pacific Rolling Door Co.
E. Lawrence Roll-Up Doors, Inc. (basis of design.)
F. Or equal.

2.2 PERFORMANCE REQUIREMENTS

A. Wind load: Design, engineer and fabricate doors to safely support a wind load of 20 psf without failure, and with a maximum deflection on curtain and guides of L/240 of span.
B. Operation-cycle requirements: Design overhead coiling door components and operator for a useful life of 10,000 cycles, at a minimum of 10 operations per day and a speed of not less than 2/3 fpm.
C. Motor size: Adequate to open or close the door from any position in its travel at a speed of 2/3 fpm.

~~2.2MODEL/TYPE~~

~~A.Lawrence Model IL, insulated, fire-rated assembly, complying with the following:~~

~~1.Minimum number of operating cycles: 20,000.~~
~~2.Fire-rating: As indicated on the Drawings.~~
~~3.Gear drive assembly: Inline, UL listed.~~

2.3 MATERIALS

A. Basic materials:

1. Sheet steel: ASTM A 653, Grade 33, galvanized.
2. Structural shapes and plates: ASTM A 36.
3. Insulation: Mineral wood with minimum R5.

B. Components:

1. Curtain: Interlocking galvanized steel type 33 flat slats with mineral wool insulation covered with 24-gage galvanized steel backslats.
2. Endlocks: Heavy malleable iron castings.
3. Bottom bar: Two 2-inch by 2-inch by 1/8-inch steel angles.
4. Guides: 11-gage minimum steel U-channel guides and steel wall angles bolted together, with 3/8-inch fasteners spaced not more than 24 inches apart.
5. Barrel: 6-5/8-inch steel pipe and solid steel shaft with sealed precision bearing and torsion springs designed for 20,000 operating cycles.
6. Brackets: 3/18-inch steel plates with sealed precision bearing on operator side and external tension adjustment wheel.
7. Hood:

   ~~7.~~a. 24-gage galvanized steel with integral flame baffle.
   b. Include automatic drop baffle to guard against passage of smoke or flame.

8. Weatherseals: Equip door with weather-stripping gaskets fitted to entire perimeter of door for a weathertight installation.

   a. At door head, use 1/8-inch- thick, replaceable, continuous sheet secured to inside of hood.
   b. At door jambs, use replaceable, adjustable, continuous, flexible, 1/8-inch- thick seals of flexible vinyl, rubber, or neoprene.

~~8.Operation: "Easy Reset" motor operator with an internal release and governor, designed for automatic closing without loss of spring tension, and reset by reconnecting fusible link cable and reopening door.~~

9. Locks: Slide type on coil side of bottom bar.
10. Finishes: Corrosion-inhibiting primer, minimum 0.2 mils pr side thermosetting polyester top coat, minimum 0.6 mils thickness each side, color ~~TBD~~ as selected by the Design Consultant from manufacturer's standard palette.

~~C.Operation:~~
~~1.Fusible link activated at 165 degrees F.~~
~~2."Easy Reset" motor with internal release and governor, designed for automatic closing without loss of spring tension, and reset by reconnecting fusible link cable and reopening door.~~
~~3.Average closing speed: 9 to 12 inches per second, but not less than 6 inches nor more than 24 inches.~~

C. Motorized operation: Door shall be driven by an integral power unit enclosed in NEMA 1 housing. Components shall be as follows.

1. Gear reducer; belt or chain drives are not acceptable.
2. Enclosed emergency hand-chain operator and electrical device.
3. Motor: High torque, totally enclosed with thermal protective device, UL listed.
4. Disc brake.
5. Geared limit switch.
6. Magnetic reversing contactor encased in power unit and prewired as required by legal requirements.
7. Motor and brake removable without affecting chain operator or limit switch setting. Power unit connected to operating shaft to raise and lower door not less than 1/2-foot per second.
8. Equip motor with an endless cadmium-plated steel hand chain for emergency operation when the power is off. Design chain hoist with a self-locking mechanism to allow curtain to be stopped at any point in its travel, and to remain in position until movement is reactivated.
9. Flush-mounted control station, unless otherwise indicated, key-operated "OPEN" and "CLOSE," NEMA 3R enclosure, with stop button.
10. Electrical leads between motor, brake, interlock and limit switch factory prewired.

D. Automatic closing operation:

1. Equip fire-rated door assemblies with manufacturer's standard, UL or FM listed, electronically-controlled, automatic door release (closing) device with delay feature. Provide with governor to limit closing speed to not more than 24 inches/second.

   a. Replaceable fusible links with temperature rise and melting point of 165 deg F; interconnected and mounted on both sides of door opening.

2. Provide a time-delay device to prevent closing due to momentary interruption of the electrical current.
3. Provide ADA-compliant audible/visible warning device for fire release closure.

E. Safety device:

1. Provide safety edge to automatically reverse the door if the device detects an obstruction in the downward travel of the door.
2. The system shall operate with airwave technology and shall not rely on pneumatic pressure or electrical strip contacts to operate properly, and shall not be subject to interference by temperature, barometric pressure, water infiltration or cuts in the rubber boot.
3. Connecting electrical cable attached to the sensor is not acceptable.

PART 3 - EXECUTION

3.1 EXAMINATION

A. Examine adjacent construction and supports.
B. Verify that opening is within allowable tolerances, plumb, level, clean, will provide solid anchoring surfaces.
C. Correct detrimental conditions before proceeding with installation.

3.2 INSTALLATION

A. Mounting: As indicated on the Drawings.
B. Install door and its operating equipment in compliance with requirements of Authorities Having Jurisdiction and in accordance with the door manufacturer's instructions, plumb, in true alignment, free of springing, forcing, racking or distortion.
C. Provide necessary hardware, jamb and head stops, anchors, inserts, hanger, equipment supports and other accessories required for a complete installation.
D. Attach door guide assemblies to walls for a rigid installation of the door curtain and operating equipment.

3.3 FIELD QUALITY CONTROL/DEMONSTRATION

A. Touchup: Touchup damaged finish to match adjacent undamaged surfaces, when the results are satisfactory to the Design Consultant, otherwise return the damaged component to the shop for refinishing.
B. Startup:

1. Test and adjust controls and safeties.
2. Replace damaged and malfunctioning controls and equipment.
3. Test door closing when activated by detector or alarm connected fire-release system. Reset door-closing mechanism after successful test.

~~B.~~Demonstration:
C. Engage a factory-authorized service representative to perform startup services and to train City's maintenance personnel as specified below:

1. Test and adjust controls and safeties.
2. Replace damaged and malfunctioning controls and equipment.
3. Train City's maintenance personnel on procedures and schedules related to troubleshooting, servicing, preventive maintenance, and procedures for testing and resetting release devices.
4. Review data in the maintenance manuals.

END OF SECTION

SECTION 08 43 13 – EXTERIOR GLASS ASSEMBLIES

PART 1 - GENERAL

1.1 SUMMARY

A. Section includes the following exterior glass assemblies.

1. Hinged storefront framing and doors at Library and Community Room.
2. Aluminum window wall system glazed with structural silicone.
3. Mullion covers, subframes, reinforcement and anchors, and sealants for the work of this Section.
4. Glass and glazing for the work of this Section.
5.Custom

B. Work installed but furnished in other Sections: Division 08 for finish hardware on doors.

C. Related requirements:

1. Division 01 for LEED requirements.
2. Division 08 for skylights and windows, and for glazing requirements for the work of this Section.

1.2 SUSTAINABLE DESIGN REFERENCE

A. USG Green Building Council (USGBC).

1.3 ADMINISTRATIVE REQUIREMENTS

A. The work of this Section requires deferred approval and delegatesd design to the Contractor, It is not fully detailed on the Drawings, which indicate desired profile and design intent, and it has not been engineered.including comprehensive engineering analysis by a qualified professional engineer, using performance requirements and design criteria indicated.

1. The Contractor is responsible for engineering, fabrication and installation of the work of this Section to withstand loads and other criteria prescribed by Code, indicated, and specified, within the physical limitations indicated on the Drawings.
2. A California-licensed professional engineer employed by the Contractor shall prepare drawings and calculations for this work. Drawings and calculations, as specified above, shall be sealed and signed by the Contractor's design engineer.

B. Pre-installation meeting: As specified in Section 08 32 00.

1.4 SUBMITTALS

A. Data:

1. List of manufacturers' Product Data for manufactured and fabricated products and components proposed for use, including product data for self-drilling fasteners.
2. Manufacturer product data for self-drilling fasteners.

B. Shop Drawings:

1. Large scale dimensioned Shop Drawings for the work of this Section showing the following:

   a. Elevations.
   b. Detail sections of typical composite members.
   c. Interface with adjacent materials/assemblies, including method of bridging gaps between frame of glazed assemblies and the adjacent materials. Unless otherwise indicated on the Drawings, single line of sealant to prevent air and water infiltration may be rejected by the Design Consultant; flexible, self-adhered flashings are preferred.
   d. Hardware mounting heights.
   e. Hardware schedule; ~~and~~ indicate operating hardware types, quantities, and locations.
   f. Expansion provisions.
   g. Glazing details.
   h. Relative layout of adjacent beams, columns, and slabs, all correctly dimensioned.
   i. Wiring diagram for doors that are electrically-operated and doors that interface with the fire alarm and the security systems.
   j. Identify shop and field sealants by product name and locate on shop drawings.
   k. Identify welds, both shop and field, by AWS welding symbols.
   l. Joinery.
   m. Anchorage.
   n. Expansion provisions.
   o. Glazing.
   p. Identify samples gage, alloy, color and finish.
   q. Flashing and drainage.
   r. Structural-sealant joints construction, with specified finish and color.
   ~~s.Include 12-inch long samples of glazing gaskets.~~

C. Layout drawings:

1. Submit drawings for fasteners and anchors to be embedded in concrete showing type of fixing, location, setting-out dimensions and acceptable setting tolerances.
2. Provide complete floor plans, elevations (if required) and full size details of the embedded anchorage for review along with a fully coordinated set of structural calculations.
3. Details of each type of embedded anchor and/or fixing shall be included within this submittal.
4. Draw details full size with complete notes.
5. Identify areas of the building to which the work of this Section is attached with embedded anchorage and areas of the building to which the work of this Section will be attached without the use of embedded anchorage.

D. Calculations: Prepare calculations in compliance with current design rules of AA, AISC, AISI, and ACI. Include analysis for wind and dead load on framing members, anchors, and concrete inserts.

1. Show section property computations for framing members. Show vertical and horizontal loads on curbs and other supports. Existing test reports will be acceptable substitute for calculations. Calculations shall be signed and sealed by a California-licensed professional engineer.

2. Do not increase allowable stresses or decrease applied loads for design wind loads, or wind loads in combination with other loads, where not permitted by Code, or if resultant allowable stress after increase is greater than or equal to yield stress.

E. Certified test results: Certified test results showing that assemblies have been tested by a recognized testing laboratory or agency and comply with specified performance characteristics.

F. Samples:

1. Cutaway Samples: Samples of each vertical-to-horizontal framing intersection of systems, made from minimum 6-inch lengths of full-size components and showing details of the following.

a. Joinery.
b. Anchorage.
c. Expansion provisions.
d. Glazing.
e. Identify samples gage, alloy, color and finish.
f. Flashing and drainage.

2. Structural-sealant joints construction, with specified finish and color.
3. Glazing gaskets: 12-inch long samples.

G. Certification: Certified test results showing that entrance and storefront systems identical to those specified have been tested by a recognized testing laboratory or agency and comply with specified performance requirements.

H. LEED: LEED certification product data as specified in Section 01 81 13, “Sustainable Design Requirements”, for the following LEED credits:

1. Credit MR 4.1 & 4.2, Recycled Content.
2. Credit MR 5.1, Regional Materials, Manufactured Locally.
3. Credit MR 5.2, Regional Materials, Harvested / Extracted Locally.
4. Credit MR 6, Rapidly Renewable Materials.
5. Credit EQ 4.1, Low Emitting Materials, Adhesives & Sealants.
6. Credit EQ 4.1, Low Emitting Materials, Paints.

1.5 QUALITY ASSURANCE

A. Fabricator/installer qualifications: Firms with a minimum of 5 years of successful experience fabricating and erecting work similar to that required for this Project.

B. Engineering responsibility:

1. Engineer, fabricate, assemble and erect the work of this Section to meet or exceed the specified design and performance criteria, and to provide watertight, structurally sound, self-draining assemblies conforming to governing codes and regulations.
2. The assemblies shown on the Drawings and specified herein are intended to define design intent and minimum performance requirements. Do not change indicated profiles without the Design Consultant's written consent.
3. Fasteners and connections are shown schematically. A California-licensed civil or structural engineer employed by the Contractor shall determine final types and sizes.

a. In no case shall the fasteners or connections conflict with or require revision of the finish profiles of the assemblies specified herein or the supporting work.
b. Connections to the supports shall not impose eccentric loading, or induce twisting or warping.

c. Connections to the structural frame shall be able to accommodate misalignment of the steel structure within limits allowed by the AISC tolerances.

C. Professional engineer qualifications:

1. Professional engineer legally qualified to practice in California and experienced in providing engineering services of the kind indicated.
2. Engineering services are defined as those performed for installations of skylight that are similar to those indicated for the Project in material, design, and extent.

D. Testing agency qualifications: Independent testing agency with the experience and capability to conduct the testing indicated, as documented according to ASTM E 548.

E. Welding: Qualify procedures and personnel according to AWS D1.2, "Structural Welding Code - Aluminum".

1.6 HANDLING

A. Procedure: In accordance with "Care and Handling of Architectural Aluminum from Shop to Site" published by AAMA.

1.7 SPECIAL WARRANTY

A. Special assembly warranty: Manufacturer standard form in which manufacturer agrees to repair or replace components of glazed aluminum assemblies that do not comply with requirements or that deteriorate as defined in this Section within specified warranty period. Repair or replace, when repairs are acceptable to the City, defective materials and workmanship during the warranty period at no cost to the City.

1. Failures include, but are not limited to, the following:

a. Penetration of water into the building thru glazed aluminum assemblies.
b. Air infiltration exceeding specified limits.
c. Structural failure of components resulting from forces within specified limits.
d. Discoloration or fading, excessive non-uniformity, pitting, cracking, peeling, or crazing of finish or corrosion.
e. Failure to fulfill other specified performance requirements.
f. Failure of operating parts to function normally.

2. Warranty period: 10 years from Substantial Completion, except 20 years for finish.

NOTE: The terms below used in conjunction with finish warranty above are defined as follows.

a. "Excessive fading": A change in appearance which is perceptible and objectionable as determined by the Design Consultant when viewed visually in comparison with the original color range standards.
b. "Excessive non-uniformity": Non-uniform fading during the period of the guarantee to the extent that adjacent parts have a color difference greater than the original acceptable color range.
c. "Will not pit or otherwise corrode": There shall be no pitting or other type of corrosion discernible from a distance of 10-foot, resulting from the natural elements in the atmosphere at the Project site.

B. Sealants: Refer to Section 07 92 00.

PART 2 - PRODUCTS

2.1 MANUFACTURERS

A. Kawneer Co., Inc.
B. US Aluminum/CRL.
C. Or equal.

2.2 SYSTEMS

A. Fixed aluminum-framed storefront with one-inch glass, clear anodized finish.
B. CRL system BG600 Aluminum-supported butt glazed window wall with 2-sided structural silicone support (basis of design.)
C. Aluminum-framed doors: Wide stile with aluminum retainers on 4 edges.

2.3 DESIGN CRITERIA

A. ~~General: Work of this Section requires deferred submittal (design/build). The Contractor is required to design, within the dimensional parameters indicated, and engineer the assemblies to withstand the loads, and thermal (for exterior assemblies), seismic, and structural movements without failure, based on testing manufacturer standard units in assemblies similar to those indicated for this Project.~~
B. Structural loads:

1. Wind loads: As indicated on Drawings.
2. Seismic Loads: As indicated on Drawings.

C. Thermal movement (exterior assemblies only):

1. Base movements for a minimum material temperature increase of 100 degrees F and decrease of 50 degrees F relative to time of installation.
2. For thermal design, the design winter surface temperature shall be plus 30 degrees F.
3. The design summer surface temperature shall be at least 180 degrees F.
4. Components including adhesive and sealants shall be capable of withstanding without failure design winter temperature to design summer temperature with simultaneous specified loads.
5. Assume a building interior temperature range of 50 to 80 degrees F.

D. Movements of supporting structure including, but not limited to, story drift and deflection from uniformly distributed and concentrated live loads.
E. Dimensional tolerances of building frame and other adjacent construction.

2.4 PERFORMANCE REQUIREMENTS

A. Performance: Systems shall withstand the effects of the loads and movements specified ~~following~~ without exceeding performance criteria and without failure due to defective manufacture, fabrication, installation, or other defects in construction, based on testing manufacturer standard units in assemblies similar to those indicated for this Project.

1. Failure includes the following:

   a. Deflection exceeding specified limits.
   b. Thermal stresses transferring to building structure.
   c. Framing members transferring stresses, including those caused by thermal and structural movements to glazing.
   d. Glazing-to-glazing contact.
   e. Noise or vibration created by wind and by thermal and structural movements.
   f. Loosening or weakening of fasteners, attachments, and other components.
   g. Sealant failure.
   h. Failure of operating units.

2. Deflection of framing members:

   a. Deflection normal to wall plane: Limited to edge of glass in a direction perpendicular to glass plane shall not exceed L/175 of the glass edge length for each individual glazing lite or an amount that restricts edge deflection of individual glazing lites to 3/4 inch, whichever is less.
   b. Deflection parallel to glazing plane: Limited to L/360 of clear span or 1/8 inch, whichever is smaller, but in no case by an amount which reduces glazing bite to less than 75 percent of design dimension and that which reduces edge clearance between framing members and glazing or other fixed components directly below them to less than 1/8 inch and clearance between members and operable units directly below them to less than 1/16 inch.

B. Structural-test performance: Provide assemblies in exterior walls, including anchorage, capable of withstanding wind-load design pressures indicated on the Structural Drawings, acting inward and outward; provide interior assemblies, including anchorage, capable of withstanding a lateral pressure of not less than 5 psf. Demonstrate structural adequacy of assemblies by testing according to ASTM E 330 as follows.

   1. When tested at positive and negative wind-load design pressures, systems ~~do~~ shall not evidence deflection exceeding specified limits.
   2. When tested at 150 percent of positive and negative wind-load design pressures, systems, including anchorage, shall not evidence material failures, structural distress, and permanent deformation of main framing members exceeding 0.2 percent of span.
   3. Test durations: As required by design wind velocity but not fewer than 10 seconds.

C. Live loads: Provide assemblies, including anchorage, that accommodate the supporting structure deflection from uniformly distributed and concentrated live loads indicated without failure of materials or permanent deformation.

D. Movements of the structural-support: Provide assemblies that accommodate structural movements including, but not limited to, sway and deflection.

E. ~~Story~~ Drift: Provide assemblies that accommodate design displacement ~~of adjacent stories~~ indicated.

   ~~1.Design displacement: As indicated on Drawings.~~
   1. Test performance: Meet criteria for passing, based on building occupancy type, when tested according to AAMA 501.4 at design displacement and 1.5 times design displacement.

F. Air infiltration: Provide aluminum-framed assemblies with maximum air leakage through fixed glazing and framing areas of 0.06 cfm/sq.-foot of fixed wall area when tested according to ASTM E 283 at a minimum static-air-pressure difference of 6.24 psf.

G. Water penetration under static pressure: Provide aluminum-framed assemblies that do not evidence water penetration through fixed glazing and framing areas when tested according to ASTM E 331 at a minimum static-air-pressure difference of 20 percent of positive wind-load design pressure, but not less than 6.24 psf.

1. Water penetration under dynamic pressure: Provide assemblies that do not evidence water leakage through fixed glazing and framing areas when tested according to AAMA 501.1 under dynamic pressure equal to 20 percent of positive wind-load design pressure, but not less than 6.24 psf.
2. Maximum water leakage: No uncontrolled water penetrating assemblies or water appearing on systems' normally exposed interior surfaces from sources other than condensation. Water leakage does not include water controlled by flashing and gutters that is drained to exterior and water that cannot damage adjacent materials or finishes.

H. Thermal movements: Provide assemblies that allow for thermal movements resulting from the specified maximum change (range) in ambient and surface temperatures. Base engineering calculation on surface temperatures of materials due to both solar heat gain and nighttime-sky heat loss.

1. Test performance: No buckling; stress on glass; sealant failure; excess stress on framing, anchors, and fasteners; or reduction of performance when tested according to AAMA 501.5.

I. Condensation resistance: Provide assemblies with fixed glazing and framing areas having condensation-resistance factor (CRF) of not less than 45 when tested according to AAMA 1503.

J. Sound transmission: Provide aluminum-framed systems with fixed glazing and framing areas having the following sound-transmission characteristics:

1. Sound transmission class (STC): Minimum [26] [30] [35] STC when tested for laboratory sound transmission loss according to ASTM E 90 and determined by ASTM E 413.
2. Outdoor-indoor transmission class (OITC): Minimum [26] [30] [34] OITC when tested for laboratory sound transmission loss according to ASTM E 90 and determined by ASTM E 1332.

K. Structural sealant: Capable of withstanding tensile and shear stresses imposed by aluminum-framed systems without failing adhesively or cohesively. When tested for preconstruction adhesion and compatibility, cohesive failure of sealant shall occur before adhesive failure.

1. Adhesive failure occurs when sealant pulls away from substrate cleanly, leaving no sealant material behind.
2. Cohesive failure occurs when sealant breaks or tears within itself but does not separate from each substrate because sealant-to-substrate bond strength exceeds sealant's internal strength.

L. Load transfer: Framing members shall not transfer stresses, including those caused by thermal and structural movement, to glazing units.

M. Glazing: Physically and thermally isolate glazing from framing members.

N. Dimensional tolerances: Provide assemblies that accommodate dimensional tolerances of building frame and other adjacent construction.

O. Performance requirements for doors: Resistance to corner racking shall be tested by the "Dual Moment Load" test as follows.

1. Test section shall consist of a standard top door corner assembly. Side rail section shall be 24 inches long; top rail section shall be 12 inches long.

2. Anchor "top rail" positively to test bench so that corner protrudes 3-inches beyond the bench edge.
3. Anchor a lever arm positively to "side rail" at a point 19 inches from the inside edge of "top rail." Attach weight support pad at a point 19 inches from inner edge of "side rail".
4. Test section shall withstand a load of 170 lbs. on the lever arm before reaching the point of a 1/18-inch gap at the stile/rail, joint or a 3-degree rotation in the stile. Further failure, defined as a rotation of the lever arm in excess of 45, shall not be reached before 270 lbs.

2.5 MATERIALS/COMPONENTS

A. Aluminum:

1. Extrusions: 6063-T5 alloys. Provide a minimum nominal wall thickness of 1/8-inch for structural members and 1/16-inch for non-structural members.

   a. Standard commercial tolerances listed in AA "Aluminum Standards and Data" apply to finished, fabricated and assembled materials, except
   b. Provide stricter tolerances where required to assure proper functioning of glass and glazing materials.

2. Sheet: 3003-H14 alloys. Provide a minimum nominal thickness of 3/16-inch. Standard commercial tolerances listed in AA "Aluminum Standards and Data" apply to finished, fabricated and assembled materials.
3. Surface flatness and edges: For exposed work provide materials that are cold-rolled, cold-finished, cold-drawn, extruded, stretcher-leveled, machine cut and otherwise produced to the highest commercial standard for flatness with edges and corners sharp and true to angle or curvature as required.

B. Steel mullion reinforcement, if required by wind loading and other considerations: Proprietary bent steel plate or structural steel shape complying with the following.

1. Hot-rolled sections: ASTM A 36.
2. Structural tube framing: ASTM A 500, Grade B.

C. Galvanized steel: As specified in Section 05 50 00.
D. Fasteners:

1. General: Aluminum, non-magnetic stainless steel or other materials warranted by the manufacturer to be non-corrosive and compatible with aluminum components, hardware, anchors and other components.
2. Reinforcement: Where fasteners screw-anchor into aluminum less than 0.125-inch thick, reinforce the interior with aluminum or non-magnetic stainless steel to receive screw threads, or provide standard non-corrosive pressed-in splined grommet nuts.
3. Exposed fasteners: Except where unavoidable for application of hardware, do not use exposed fasteners. For the application of hardware, use fasteners that match the finish of member or hardware being fastened. Provide Phillips flat-head machine screws for exposed fasteners.

E. Welding electrodes: As recommended by AWS for the type of metal to be welded and the conditions of use.
F. Brackets: Where feasible, provide high-strength aluminum brackets and reinforcements; otherwise provide non-magnetic stainless steel or steel complying with ASTM A 386.

G. Shims:

1. At static connections use high impact polystyrene solid shims. Horseshoe shims are allowed at static connections only.
2. At dynamic anchor conditions, use Nylatron isolating slip pads with hard round holes

H. Weatherstripping:

1. Compression weatherstripping: Manufacturer's standard replaceable compressible weatherstripping gaskets of molded neoprene complying with ASTM D 2000 or molded PVC complying with ASTM D 2287.
2. Sliding weatherstripping: Manufacturer's standard replaceable weatherstripping of wool, polypropylene, or nylon woven pile, with nylon fabric or aluminum strip backing, complying with AAMA 701.

I. Glass and glazing materials: As indicated on the Drawings and specified in Section 08 80 00.

J. Sealants and backup rods:

1. Glazing sealants: Refer to Section 08 80 00.
2. Within assemblies: Manufacturer standard non-drying, non-skinning sealant complying with AAMA 809.
3. Between assemblies and adjacent materials: As specified in Section 07 92 00.

K. Finish on exposed surfaces: AAMA Clear anodized AAMA 611, AA-M12C22A41, Class I.

L. Paint:

1. For concealed ferrous metal surfaces: Tneme-Zinc 90-93 by Tnemec, Zinc-Lock 308 by Porter International, or MZ-4 Epoxy Zinc-Rich Primer by Valspar Corp.
2. Bituminous paint: Cold-applied asphalt mastic paint complying with SSPC-Paint 12, except containing no asbestos, and formulated for 30-mil thickness per coat.

M. Isolation tape:

1. Tremco 440.
2. 3M EC1202.
3. Tremco Presstite 579.6.

N. Foam insulation: Closed-cell polyurethane. Use in mullions and closure pieces that cannot be insulated during or after assembly.

O. Finish:

1. Finish exposed surfaces of assemblies with a clear anodized coating complying with AA M12C22A41.
2. Shop primer for ferrous metal: Manufacturer or fabricator standard, fast-curing, lead-free, universal rust-inhibitive alkyd primer complying with performance requirements of FS TT-P645.
3. Shop primer for concealed aluminum surfaces: Alkyd barium metaborate made by one of the manufacturers listed in Section 09900, or bituminous paint.
4. Galvanizing repair paint: SSPC Paint No. 20, Type II (Organic), by Tnemec, Porter International, Valspar Corp., Ameron Protective Coatings, or DuPont Co.
5. Bituminous paint: Cold-applied asphalt mastic complying with SSPC Paint 12, but containing no asbestos fibers.

2.6 FABRICATION

A. Furnish shop drawings, inserts and similar items to other trades, at appropriate times as required for proper sequence of construction.

1. Verify dimensions of the supporting structure and other elements that precede this work before fabrication of the required components.
2. Provide erection tolerances corresponding with specified tolerances for other work wherever field measurements cannot be obtained.

B. Maintain the visual design concept shown, including member sizes, profiles and alignment of components.

C. Fabricate and assemble components with proper and acceptable provision for noiseless thermal expansion and contraction, fabrication and erection tolerances, adjoining building component tolerances, and dynamic movements.

D. Fabricate and assemble components with minimum perimeter clearances and shim spacing, but enable installation and dynamic movement of perimeter seals.

E. Removable members such as glass stops, fillers or closures shall be extruded, and securely engaged into adjacent components. Fabricate extrusions to eliminate edge projection, bowing, and misalignment at joints.

F. Design and construct expansion joints so that they will be, and remain, permanently watertight, and will accommodate weather and building dynamics.

G. For surfaces exposed to view employ only materials which are free from alloy defects, die marks, scratches, streaks and other surface blemishes.

H. When using aluminum sheets, use material light enough to permit workability but heavy enough to accurately retain the brake shape or contour without oil-canning when fastened to backing or blocking.

I. Complete the fabrication and assembly of the components in the shop to the greatest extent possible to minimize field cutting, splicing, fastening, sealing and finishing.

1. Maintain provisions for expansion and movement.
2. Disassemble only as necessary for shipment and erection.
3. Provide secure attachment and support at joints, with hairline, flush fit between contacting members.

J. Complete the cutting, fitting, forming, drilling and grinding of metal before cleaning and applying specified finish. Remove arrises from cut edges and ease edges and corners to a radius of approximately 1/64-inch minimum, 1/32-inch maximum.

K. Welding:

1. Comply with industry standards for assembly and fabrication using system and rods for exposed metals that will provide texture match with materials being joined.
2. Grind exposed welds smooth and flush with parent metal using clean grinding wheels of a type that will not result in stains or discoloration.

L. Hardware:

1. Cut, reinforce, drill and tap doors and frames at the factory to receive hardware.
2. Provide hardware reinforcement of stainless steel or hot-dip galvanized steel secured by welding or stainless steel screws.

M. Door fabrication:

1. Make proper allowance for clearances at jambs, meeting stile of pairs, head and threshold thickness and clearance.

2. Equip meeting stiles on pairs of doors with an adjustable astragal.
3. Close the top of out-swinging doors with a plate or inverted channel.

N. Finishing:

1. Finish surfaces as follows to be within the color range represented by approved samples.
2. Finish aluminum surfaces with an anodized, batch process, Architectural Class I, clear coating complying with AAMA 607.1 and these Specifications.
   a. Anodic thickness: 0.0007-inch minimum.
   b. Anodic film color: Clear (transparent).
   c. Seal anodized surfaces with hot deionized water at 210-degree F with a pH between 6.0 and 6.4.
3. Prime concealed aluminum surfaces in contact with masonry, concrete or steel with rust-inhibitive primer or with bituminous paint.
4. Prime steel parts of anchors, anchor inserts, reinforcement and supports with rust-inhibitive primer. After field welding, remove weld slag and touch-up abraded primer.
5. Provide minimum dry film thickness of 30 mils for bituminous paint and one mil for all other primers.

PART 3 - EXECUTION

3.1 EXAMINATION

A. Examine adjacent construction and supports.
B. Verify that openings are within allowable tolerances, plumb, level, clean, will provide a solid anchoring surface.
C. Examine wall flashings, water and weather barriers, and other built-in components to ensure a coordinated, weathertight installation.
D. Correct detrimental conditions before proceeding with installation.

3.2 INSTALLATION

A. General:

1. Do not install defective components, including warped, bowed, dented, abraded and broken members, and glass with damaged edges.
2. Remove and replace members that have been damaged during installation or thereafter before final acceptance.
3. Do not cut, trim, or weld components during erection in a manner that would damage the finish, decrease their strength, or result in a visual imperfection or a failure in performance of the work.
4. Return components that require alteration to the shop for refabrication or replacement.
5. Install components level, plumb, true to line and with uniform tight joints and reveals. Attach to structure with non-staining and non-corrosive shims, anchors, fasteners and spacers.
6. Provide all accessories such as fastenings, sealants and concealed anchorage needed for a complete weatherproof installation.

B. Separate aluminum and other corrodible surfaces from sources of corrosion or electrolytic action at points of contact with other materials by complying with the requirements specified under "Dissimilar Materials" in the Appendix to AAMA 101.

~~7.Protect unpainted aluminum surfaces that will be in contact with cementitious and dissimilar metals from corrosion and galvanic action by applying a heavy coating of bituminous paint or by separating surfaces with waterproof gaskets or nonmetallic flashing.~~

C. Erection tolerances:

1. Provide adjustment within the assemblies to accommodate job variations.
2. Install the work of this Section within the following tolerances:

   a. Deviation from established vertical, horizontal, or designed position shall not exceed 1/8-inch in 12 feet of length of any member, or 1/4-inch in any total run in any line.
   b. Maximum offset from true alignment between 2 consecutive members placed end-to-end shall not exceed 1/16-inch.
   c. Maximum offset between glass framing members at corners of glazing pocket must not exceed 1/32-inch.

D. Assembly and anchorage:

1. Anchor components securely by bolting, welding or other permanent mechanical attachments system that will comply with specified requirements and permit movements that are intended or necessary.
2. Install slip-joint linings where required to ensure movement without damage of the components.
3. Provide tape separator or asphalt paint between contact surfaces of dissimilar materials where there is a possibility of corrosive or electrolytic action, but in all cases between dissimilar metals and where aluminum will contact with cementitious materials.
4. Remove weld slag and apply primer over welds. Touchup shop applied paint damaged by welding or other causes.

E. Glazing:

1. Glaze assemblies as specified in Section 08 80 00.
2. Carefully match joints of glazing beads.

F. Hanging doors:

1. Install finish hardware on doors in compliance with its manufacturer's instructions.
2. Hang doors with minimum clearance to frame and threshold to meet the performance criteria specified.
3. Hang doors and adjust hardware so doors operate freely for their entire travel, without sticking or binding, and with minimum clearance to frame to comply with performance criteria specified.

3.3 SEALANTS

A. The requirements of Section 07 92 00 apply to sealants used in this work. Seal all joints between the work of this Section and adjacent construction to be weathertight.

3.4 FIELD QUALITY CONTROL

A. Field water tests may be performed on completed glazed portions of the storefronts at the City's option in compliance with ASTM E 1105.

1. Provide hose and sufficient personnel to conduct the tests.
2. In the event that such testing should result in uncontrolled leakage, eliminate the causes of such leakage at no additional cost to the City.
3. Re-testing will be at Contractor's cost until proven watertight.

B. Touchup: Touchup damaged finish when results are satisfactory to the Design Consultant, otherwise return the damaged component to the shop for refinishing.

3.5 CLEANING

A. Clean aluminum surfaces immediately after installation. Avoid damaging finish.
B. Remove protective coating and excess glazing and sealants, dirt, and other substances.
C. Clean glass immediately after installation. Comply with manufacturer's recommendations for final cleaning and maintenance. Remove nonpermanent labels from glass surfaces.
D. Remove and replace glass broken, chipped, cracked, abraded, or damaged during the construction period.

3.6 ADJUSTING

A. Adjust door hardware for smooth operation according to hardware manufacturers' instructions.
B. Adjust closers to provide a 3-second closer sweep period for doors to move from a 70-degree open position to 3 inches from the latch measured to the leading door edge.

END OF SECTION

SECTION 08 55 13 - ALUMINUM WINDOWS

PART 1 - GENERAL

1.1 SUMMARY

A. Section includes:

1. Exterior fixed and operable aluminum-framed windows.
2. Glass and glazing for the work of this Section.

B. Related requirements:

1. Division 01 for LEED requirements.
2. Other Sections of Division 08 for the following.

   a. Sliding aluminum door assembly.
   b. Aluminum storefronts and entrances.

1.2 ADMINISTRATIVE REQUIREMENTS

A. The work of this Section requires deferred approval and delegates design to the Contractor, It is not fully detailed on the Drawings, which indicate desired profile and design intent, and it has not been engineered

1. The Contractor is responsible for engineering, fabrication and installation of the windows to withstand loads and other criteria prescribed by Code, indicated, and specified, within the physical limitations indicated on the Drawings.
2. A California-licensed professional engineer employed by the Contractor shall prepare drawings and calculations for this work. Drawings and calculations, as specified above, shall be sealed and signed by the Contractor's design engineer.

B. Pre-installation meeting: As specified in Section 08 32 00.

1.3 SUSTAINABLE DESIGN REFERENCE

A. USG Green Building Council (USGBC).

1.4 SUBMITTALS

A. Data: Manufacturer Product Data for each type of window required, including the following.

1. Construction details and fabrication methods.
2. Profiles and dimensions of individual components.
3. Data on hardware, accessories, and finishes.
4. Recommendations for maintenance and cleaning of exterior surfaces.

B. Shop Drawings: For each type of window required, include information not fully detailed in manufacturer's standard Product Data and the following.

1. Layout and installation details, including anchors.
2. Elevations of continuous work at 1/4-inch scale and typical window unit elevations at 3/4-inch scale.

3. Full-size section details of typical composite members, including reinforcement.
4. Interface with adjacent materials/assemblies, including method of bridging gaps between frame of glazed assemblies and the adjacent materials. Unless otherwise indicated on the Drawings, single line of sealant to prevent air and water infiltration may be rejected by the Design Consultant; flexible, self-adhered flashings are preferred.
5. Hardware including operators.
6. Glazing details.
7. Accessories.

C. Samples:

1. Specified finish on 12-inch long sections of window members.
2. Where finishes involve normal color variations, include sample sets showing the full range of variations expected.

D. Certification:

1. By a recognized independent testing laboratory or agency showing that each type, grade, and size of unit complies with performance requirements indicated.
2. Where reports are not available, engage a recognized independent testing laboratory or agency to perform tests specified. Provide certified test results showing that each type, grade, and size of unit complies with performance requirements indicated.

E. LEED: LEED certification product data as specified in Section 01 81 13 “Sustainable Design Requirements” for the following LEED credits:

1. Credit MR 5.1, Regional Materials, Manufactured Locally.
2. Credit MR 5.2, Regional Materials, Harvested/Extracted Locally.
3. Credit MR 6, Rapidly Renewable Materials.
4. Credit EQ 4.1, Low Emitting Materials, Adhesives & Sealants.
5. Credit EQ 4.1, Low Emitting Materials, Paints.

1.5 QUALITY ASSURANCE

A. Installer qualifications: Firm who has successfully completed installation of aluminum windows similar in design and extent to those required for the Project for a minimum of 3 years.
B. Standards: Requirements for aluminum windows, terminology and standards of performance, and fabrication workmanship are those specified and recommended in AAMA 101 and applicable general recommendations published by AAMA.
C. Single-source responsibility: Provide aluminum windows from one source and produced by a single manufacturer.
D. Professional engineer qualifications:

1. Professional engineer legally qualified to practice in California and experienced in providing engineering services of the kind indicated.
2. Engineering services are defined as those performed for installations of skylight that are similar to those indicated for the Project in material, design, and extent.

E. Testing agency qualifications: Independent testing agency with the experience and capability to conduct the testing indicated, as documented according to ASTM E 548.
F. Welding: Qualify procedures and personnel according to AWS D1.2, "Structural Welding Code - Aluminum".

1.6 HANDLING

A. Storage: Off the floor, indoors or under cover, in a protected location.

PART 2 - PRODUCTS

2.1 MANUFACTURERS

A. Fleetwood (Basis of design.)
B. Metal Windows Corp.
C. Or equal.

2.2 TYPES

A. Series: TBD.
B. Fixed and operable windows, including casement, hopper, awning and sliding assemblies.
   1. Flush, inside glazing with horizontal aluminum mullions.
   2. Butt-jointed insulating glazing in concealed channels.

2.3 ~~PERFORMANCE REQUIREMENTS~~DESIGN CRITERIA

A. General:
   1. Provide windows that comply with performance requirements specified, as demonstrated by testing manufacturer's corresponding stock systems according to test methods indicated.
   2. Comply with structural performance, air infiltration, and water penetration requirements indicated in AAMA/NWWDA 101.
B. Wind load: Refer to the Structural Drawings for design wind velocity at the Project site.~~Comply with Code for design wind velocity at the Project site~~.
C. Seismic load: As indicated.
D. Thermal movement:
   1. Base movements for a minimum material temperature increase of 100 degrees F and decrease of 50 degrees F relative to time of installation.
   2. For thermal design, the design winter surface temperature shall be plus 30 degrees F.
   3. The design summer surface temperature shall be at least 180 degrees F.
   4. Components including adhesive and sealants shall be capable of withstanding without failure design winter temperature to design summer temperature with simultaneous specified loads.
   5. Assume a building interior temperature range of 50 to 80 degrees F.
E. Forced-entry resistance: Provide units that comply with requirements for Performance Level 10 when tested in compliance with ASTM F 588, unless more restrictive requirements are mandated by Code.
F. Movements of supporting structure including, but not limited to, story drift and deflection from uniformly distributed and concentrated live loads.
G. Dimensional tolerances of building frame and other adjacent construction.

2.4 PERFORMANCE REQUIREMENTS

A. General: Systems shall withstand the effects of the loads and movements specified without exceeding performance criteria and without failure due to defective manufacture, fabrication, installation, or other defects in construction, based on testing manufacturer standard units in assemblies similar to those indicated for the Project.

1. Failure includes the following:

a. Deflection exceeding specified limits.
b. Thermal stresses transferring to building structure.
c. Framing members transferring stresses, including those caused by thermal and structural movements to glazing.
d. Glazing-to-glazing contact.
e. Noise or vibration created by wind and by thermal and structural movements.
f. Loosening or weakening of fasteners, attachments, and other components.
g. Sealant failure.
h. Failure of operating units.

2. Deflection of framing members:

a. Deflection normal to wall plane: Limited to edge of glass in a direction perpendicular to glass plane shall not exceed L/175 of the glass edge length for each individual glazing lite or an amount that restricts edge deflection of individual glazing lites to 3/4 inch, whichever is less.
b. Deflection parallel to glazing plane: Limited to L/360 of clear span or 1/8 inch, whichever is smaller, but in no case by an amount which reduces glazing bite to less than 75 percent of design dimension and that which reduces edge clearance between framing members and glazing or other fixed components directly below them to less than 1/8 inch and clearance between members and operable units directly below them to less than 1/16 inch.

B. Structural-test performance: Provide assemblies, including anchorage, capable of withstanding wind-load design pressures indicated on the Structural Drawings, acting inward and outward. Demonstrate structural adequacy of assemblies by testing according to ASTM E 330 as follows.

1. When tested at positive and negative wind-load design pressures, systems shall not evidence deflection exceeding specified limits.
2. When tested at 150 percent of positive and negative wind-load design pressures, systems, including anchorage, shall not evidence material failures, structural distress, and permanent deformation of main framing members exceeding 0.2 percent of span.
3. Test durations: As required by design wind velocity but not fewer than 10 seconds.

C. Live loads: Provide assemblies, including anchorage, that accommodate the supporting structure deflection from uniformly distributed and concentrated live loads indicated without failure of materials or permanent deformation.

D. Movements of the structural-support: Provide assemblies that accommodate structural movements including, but not limited to, sway and deflection.

E. Drift: Provide assemblies that accommodate design displacementindicated.

1. Test performance: Meet criteria for passing, based on building occupancy type, when tested according to AAMA 501.4 at design displacement and 1.5 times design displacement.

F. Air infiltration and water penetration under static pressure: Complyw with AAMA/NWWDA 101.

G. Thermal movements: Provide assemblies that allow for thermal movements resulting from the specified maximum change (range) in ambient and surface temperatures. Base engineering calculation on surface temperatures of materials due to both solar heat gain and nighttime-sky heat loss.

1. Test performance: No buckling; stress on glass; sealant failure; excess stress on framing, anchors, and fasteners; or reduction of performance when tested according to AAMA 501.5.

H. Condensation resistance: Provide assemblies with fixed glazing and framing areas having condensation-resistance factor (CRF) of not less than 45 when tested according to AAMA 1503.

I. Sound transmission: Provide windows having the following sound-transmission characteristics when closed.

1. Sound transmission class (STC): Minimum [26] [30] [35] STC when tested for laboratory sound transmission loss according to ASTM E 90 and determined by ASTM E 413.
2. Outdoor-indoor transmission class (OITC): Minimum [26] [30] [34] OITC when tested for laboratory sound transmission loss according to ASTM E 90 and determined by ASTM E 1332.

J. Load transfer: Framing members shall not transfer stresses, including those caused by thermal and structural movement, to glazing units.

K. Glazing: Physically and thermally isolate glazing from framing members.

L. Dimensional tolerances: Provide assemblies that accommodate dimensional tolerances of building frame and other adjacent construction.

2.5 MATERIALS

A. Aluminum: Alloy and temper recommended by the manufacturer for strength and application of required finish, complying with ASTM B 221 for extrusions and ASTM B 209 for sheet or plate.

B. Fasteners: Aluminum, non-magnetic stainless steel, epoxy adhesive, or other materials warranted by the manufacturer to be non-corrosive and compatible with aluminum window members, trim, hardware, anchors, and other components of window units.

1. Reinforcement: Where fasteners screw-anchor into aluminum is less than 0.125-inch thick, reinforce the interior with aluminum or non-magnetic stainless steel to receive screw threads or provide standard non-corrosive pressed-in splined grommet nuts.
2. Exposed fasteners: Except where unavoidable for application of hardware, do not use exposed fasteners. For hardware, use fasteners that match the finish of the member or hardware being fastened, as appropriate.

C. Anchors, clips, and window accessories: Aluminum, non-magnetic stainless steel, or hot-dip zinc-coated steel or iron complying with the requirements of ASTM B 633; provide sufficient strength to comply with design criteria.

D. Compression type glazing strips and weatherstripping: One of the following.

1. Molded EPDM or neoprene gaskets complying with AAMA SG-1 or with ASTM D 2000 Designation 2BC415 - 3BC620.
2. Molded PVC gaskets complying with ASTM D 2287.
3. Molded expanded EPDM or neoprene gaskets complying with ASTM C 509, Grade 4.

E. Sliding type weatherstripping:

1. Woven pile weatherstripping of wool, polypropylene, or nylon pile and resin-impregnated backing fabric.
2. Comply with AAMA 701.2.

3. Provide stripping with integral centerline barrier fin of semi-rigid plastic sheet of polypropylene.

F. Replaceable weather seals: Comply with AAMA 701/702.
G. Glass and glazing materials: As indicated on the Drawings and specified in Section 08 80 00.
H. Sealants and backup rods:

1. Within assemblies: Manufacturer's standard non-drying, non-skinning sealant complying with AAMA 809.2.
2. Between assemblies and adjacent materials: As specified in Section 07 92 00.
3. Glazing sealants: Refer to Section 08 80 00.

~~I.Insect screens:~~

~~1.Design windows and hardware to accommodate screen in a tight-fitting, removable arrangement, with a minimum of exposed fasteners and latches. Locate screens on outside of windows and provide for each operable panel.~~
~~2.Aluminum wire fabric screen, Charcoal Gray 18-by-16 mesh of 0.011-inch diameter, coated aluminum wire.~~
~~3.Extruded-aluminum or aluminum tubular framing sections not less than 0.050-inch wall thickness.~~

I. Hardware: Manufacturer's standard hardware fabricated from aluminum, stainless steel, or other corrosion-resistant material compatible with aluminum and of sufficient strength to perform the function for which it is intended.
J. Sill cap/track: Extruded-aluminum track with natural anodized finish of thickness, dimensions, and profile indicated; designed to comply with performance requirements indicated, and to drain to the exterior.
K. Locks and Latches: Designed to allow unobstructed movement of the sash across adjacent sash in direction indicated and operated from the inside only.
L. Roller assemblies: Low-friction design.
M. Pole operators: Tubular-shaped anodized aluminum; with rubber-capped lower end and standard push-pull hook at top to match hardware design; of sufficient length to operate windows without reaching more than 60 inches above floor; one pole operator and pole hanger per room that has operable windows more than 72 inches above floor.

2.6 CONSTRUCTION

A. General:

1. Fabricate windows to the dimensions and profiles indocated, and to comply with design criteria, performance requirements, and indicated standards.
2. Fabricate frame and sash square, without rack, and with flush, hairline joints.
3. Equip ventilators with weatherstripping to prevent water and air infiltration.
4. Sash members shall be contained within frame members, so that total sight line of sash and frame does not exceed the frame sight line.

B. Provide units that are reglazable without dismantling sash or ventilator framing.
C. Provide subframes with anchors, where shown, of profile and dimensions indicated but not less than 0.062-inch extruded aluminum.
D. Miter or cope corners, and weld and dress smooth with concealed mechanical joint fasteners. Finish to match window.
E. Provide mullion, sills and cover plates, matching window units, complete with anchors for support to structure and installation of the windows.
F. Allow for erection tolerances and provide for movement of window due to thermal movement and building deflections.

~~G.Screens:~~

~~1.Assemble aluminum framing sections with flush, hairline, mitered, reinforced corners.~~
~~2.Insert screen in frame groove and stretch taut. Lock in place with continuous spline.~~
~~3.Finish: Match aluminum window members.~~

G. Finish:

1. Sight-exposed aluminum surfaces: Finish as specified in Section 08 43 00.
2. Steel brackets: Hot-dip galvanize and coat with rust-inhibitive primer.

H. Glazing:

1. Factory glaze windows.
2. Comply with the glass manufacturer recommendations and the requirements of Section 08 80 00.

PART 3 - EXECUTION

3.1 EXAMINATION

A. Examine adjacent construction and supports.
B. Examine wall flashings, ~~vapor retarders,~~ water and weather barriers, and other built-in components to ensure a coordinated, weathertight window installation.
C. Verify that openings are within allowable tolerances, plumb, level, clean, will provide a solid anchoring surface.
D. Correct detrimental conditions before proceeding with installation.

3.2 INSTALLATION

A. Do not install components that are bowed, dented, abraded, broken or otherwise defective.
B. Install windows level, plumb, square and with tight fitting joints. Attach to supporting construction with nonstaining and non-corrosive shims, anchors, fasteners and spacers as shown on approved shop drawings.
C. Set sill members in a bed of compound or with joint fillers or gaskets to provide weathertight construction.

1. Refer to Section 07 92 00 for compounds, fillers, and gaskets to be installed concurrently with windows.
2. Coordinate installation with wall flashings and other components of the work.

D. Separate aluminum and other corrodible surfaces from sources of corrosion or electrolytic action at points of contact with other materials by complying with the requirements specified under "Dissimilar Materials" in the Appendix to AAMA 101.
E. Provide all accessories such as fasteners, sealants and concealed anchorage needed for a complete weatherproof installation.
F. Adjust ventilators to assure smooth operation.

1. Units shall be weathertight when closed.
2. Lubricate hardware and moving parts as required.
3. Weatherstrips shall not bind or prevent sash or ventilator from closing easily and tight with weathertight contact between metal.

3.3 FIELD QUALITY CONTROL & CLEANING

A. Clean aluminum surfaces immediately after installation. Avoid damaging finish.
B. Remove protective coating and excess glazing and sealants, dirt, and other substances.

C. Clean glass immediately after installation. Comply with manufacturer's recommendations for final cleaning and maintenance. Remove nonpermanent labels from glass surfaces.
D. Remove and replace glass broken, chipped, cracked, abraded, or damaged during the construction period.

~~3.3DEMONSTRATIONS~~

~~A.Manufacturer shall provide window maintenance instructions and minimum of one on-site visit to assure proper operation of units.~~

END OF SECTION

SECTION 08 60 00 - ALUMINUM-FRAMED SKYLIGHT

PART 1 - GENERAL

1.1 SUMMARY

A. Section includes:

1. Curb-mounted, sloped skylight framing and glazing.
2. Flashings at perimeter of skylight.
3. Closure pieces, clips and angles.
4. Gaskets and sealants for the work of this Section.
5. Supplementary parts and components, such as inserts, clips, fasteners, anchors and other miscellaneous supports required for a complete, weatherproof installation.

B. Related requirements:

1. Division 01 for LEED requirements.
2. Division 07 for the following:

   a. Tubular skylights.
   b. Flashings other than for skylight.
   c. Sealants other than specified herein.

3. Division 08 for the following:

   a. Tubular skylights.
   b. All other glass and glazing.

1.2 SUSTAINABLE DESIGN REFERENCE

A. USG Green Building Council (USGBC).

1.3 ADMINISTRATIVE REQUIREMENTS

A. Deferred approval: The work of this Section requires deferred approval and delegated design, including comprehensive engineering analysis by a qualified professional engineer, ~~using~~ to meet the performance requirements and design criteria indicated.

B. Pre-installation meeting:

1. Prior to start of installation, arrange a pre-installation meeting between the glass and skylight system manufacturers authorized representatives, the Contractor, the installer, the glazier, and the Design Consultant to review the Drawings and Specifications, the glass and sealants manufacturers' data, and conditions of framing to be glazed, as well as other conditions that would affect the quality of this work.
2. If more than one trade will be responsible for the successful performance of the work of this Section, these trades shall attend the meeting.
3. Review all typical and atypical details to verify the method(s) of installation that the Contractor intends to follow, as well as corrective actions that are required.
4. Special conditions not specifically referenced or addressed by the Project Drawings, manufacturer's typical details, or the Shop Drawings, shall also be identified, reviewed and discussed.

5. Take photographs and notes of unresolved conditions, if any, along with sketches of the same unresolved conditions to determine what actions need to be taken to assure an installation that will meet the requirements of the Contract Documents, and will be acceptable to the assembly/material manufacturer to issue the warranties specified.
6. Record meeting minutes and distribute electronic copy to attendees and others concerned, within 7 days after the meeting.

1.4 SUBMITTALS

A. Data: Manufacturer Product Data for the skylight assembly.
B. Shop Drawings:

1. Large scale, dimensioned shop and erection drawings for skylight.
2. Show joinery techniques, provision for horizontal and vertical expansion, glass and metal thicknesses, and framing member profiles. Identify all materials including metal alloys, glass types, fasteners, and glazing materials.
3. Identify shop and field sealants by product name and locate on shop drawings. Show relative layout of adjacent beams, columns, and slabs, correctly dimensioned.
4. Show interface with adjacent and abutting materials.
5. Dimension position of glass edge relative to metal daylight.
6. Identify shop and field welds by AWS Welding Symbols, A2.0.

C. Samples:

1. Twelve-inch Samples of production-run aluminum extrusions with the specified finish, and a corner assembly showing typical skylight construction.
2. Twelve-inch long Samples of gaskets.
3. Cutaway Sample of framing intersection, made from 12-inch long lengths of full-size components and showing details of the following.

    a. Primary members.
    b. Joinery.
    c. Anchorage.
    d. Expansion provisions.
    e. Glazing.
    f. Flashing and drainage.
    g. Structural-sealant joints.

D. Structural calculations: Prepare and submit structural calculations for the skylight.

1. Prepare calculations in compliance with current design rules of AA, AISC, AISI, and ACI. Include analysis for wind, seismic, live and dead loads on framing members, anchors, and concrete inserts.
2. Show section property computations for framing members.
3. Show vertical and horizontal loads on curbs and other supports.
4. Existing test reports will be acceptable substitute for calculations.
5. Calculations shall be signed and stamped by a California-licensed ~~professional~~ structural or civil engineer.
6. Do not increase allowable stresses or decrease applied loads for design wind load, seismic load, or those loads in combination with other loads, where not permitted by Code, or if resultant allowable stress after increase is greater than or equal to yield stress.

E. Building Department approval: Submit reviewed Shop Drawings, calculations and any other supporting data required by the Building Department for its review and approval. Pay applicable fees resulting therefrom.
F. Preconstruction test reports: Indicate and interpret test results for compliance with requirements.
G. Product test reports: From a qualified testing agency indicating skylight comply with specified requirements, based on comprehensive testing of current products.
H. Sealant compatibility and adhesion test reports: From sealant manufacturer indicating that materials forming joint substrates and joint sealant backings have been tested for compatibility and adhesion with sealants; include sealant manufacturer's interpretation of test results for sealant performance and recommendations for primers and substrate preparation needed for adhesion.
I. Field test reports: Indicate and interpret test results for compliance with requirements.
J. LEED: LEED certification product data as specified in Section 01 81 13, “Sustainable Design Requirements”, for the following LEED credits:

1. Credit MR 4.1 & 4.2, Recycled Content.
2. Credit MR 5.1, Regional Materials, Manufactured Locally.
3. Credit MR 5.2, Regional Materials, Harvested / Extracted Locally.
4. Credit MR 6, Rapidly Renewable Materials.
5. Credit EQ 4.1, Low Emitting Materials, Adhesives & Sealants.
6. Credit EQ 4.1, Low Emitting Materials, Paints.

K. Closeout: Furnish the City a comprehensive plan for replacement of broken glass. Include a local source.

1.5 QUALITY ASSURANCE

A. Fabricator/installer qualifications: Single firm which can show a minimum of 5 years of successful experience in fabricating and erecting skylight similar to that required for this Project.
B. Engineering responsibility:

1. Engineer, fabricate, assemble and erect the skylight to meet or exceed the criteria specified, and to provide watertight, structurally sound, self-draining assembly conforming to governing codes and regulations.
2. Fasteners and connections are shown schematically. The Contractor’s ~~A California licensed professional~~ engineer ~~employed by the Contractor~~ shall determine final types and sizes.

a. In no case shall the fasteners or connections conflict with or require revision of the finish profiles of the skylight or the supporting work.
b. Connections to the structural frame shall not impose eccentric loading, or induce twisting or warping.
c. Connections to the structural frame shall be able to accommodate actual and potential misalignment of the steel structure within limits allowed by the AISC tolerances.

C. Professional engineer qualifications:

1. Professional engineer legally qualified to practice in California and experienced in providing engineering services of the kind indicated.
2. Engineering services are defined as those performed for installations of skylight that are similar to those indicated for the Project in material, design, and extent.

D. Testing agency qualifications: Independent testing agency with the experience and capability to conduct the testing indicated, as documented according to ASTM E 548.
E. Welding: Qualify procedures and personnel according to AWS D1.2, "Structural Welding Code - Aluminum".

1.6 HANDLING

A. Procedure: "Care and Handling of Architectural Aluminum from Shop to Site" published by AAMA.

1.7 SPECIAL WARRANTY

A. Warrant skylight against defective materials and workmanship for 5 years after Substantial Completion.
B. Written warranty, executed by manufacturer agreeing to repair or replace components of assemblies that fail in materials or workmanship within specified warranty period. Failures include, but are not limited to, the following:

1. Structural failure.
2. Sealant failure.
3. Failure of system to meet performance requirements.
4. Deterioration of metals, metal finishes, and other materials beyond normal weathering.
5. Water leakage; defined as uncontrolled water appearing on normally exposed interior surfaces of skylight from sources other than condensation. Water controlled by flashing and gutters and drained back to the exterior and that cannot damage adjacent materials or finishes is not water leakage.

C. Repair or replace defective materials and workmanship during the warranty period at no cost to the City.

PART 2 - PRODUCTS

2.1 MANUFACTURERS

A. Bristolite.
B. Metcoe Skylight Specialties, Inc.
C. O'Keeffe's, Inc.
D. Velux (basis of design).
E. Wasco Skylights.
F. Or equal.

2.2 PERFORMANCE REQUIREMENTS

~~A.Delegated design: Skylight requires deferred approval, including comprehensive engineering analysis by a qualified professional engineer, using performance requirements and design criteria indicated.~~
A. Performance - General: Skylight shall withstand the effects of the following without failure due to defective manufacture, fabrication, installation, or other defects in construction:

1. Structural loads, both wind and live loads.
2. Seismic and thermal movements.
3. Movements of supporting structure.

4. Dimensional tolerances of support system and other adjacent construction.
5. Failure includes, but is not limited to, the following:

   a. Deflection exceeding specified limits.
   b. Thermal stresses transfered~~ring~~ to building structure.
   c. Framing members transferring stresses, including those caused by thermal and structural movements to glazing.
   d. Glazing failure and disengagement from frame.
   e. Glazing-to-glazing contact.
   f. Noise or vibration created by wind, and by thermal and structural movements.
   g. Loosening or weakening of fasteners, attachments, and other components.
   h. Sealant failure.

B. Structural loads:

   1. Wind: As indicated on Drawings.
   2. Seismic: As indicated on Drawings.
   3. Live load: 250 psf concentrated, unless otherwise prescribed by Code.

C. Deflection of framing members when subjected to loads specified~~: At design wind pressure,~~ as follows:

   1. Deflection normal to glazing plane: Limited to edge of glass in a direction perpendicular to glass plane not exceeding L/175 of the glass edge length for each individual glazing lite or an amount that restricts edge deflection of individual glazing lites to 3/4 inch, whichever is less.
   2. Deflection parallel to glazing plane: Limited to amount not exceeding that which reduces glazing bite to less than 75 percent of design dimension and that which reduces edge clearance between framing members and glazing or other fixed components to less than 1/8 inch.

D. Lateral bracing of framing members: Compression flanges of flexural members are laterally braced by cross members with minimum depth equal to 50 percent of flexural member that is braced. Glazing does not provide lateral support.

E. Structural-test performance: Provide skylight tested according to ASTM E 330, as follows.

   1. When tested at positive live loads, and positive and negative wind-load design pressures, assemblies shall not evidence deflection exceeding specified limits.
   2. When tested at 150 percent of positive and negative wind-load design pressures, assemblies, including anchorage, shall not evidence material failures, structural distress, and permanent deformation of main framing members exceeding 0.2 percent of span.
   3. Test durations for wind load: As required by design wind velocity, but not less than 10 seconds.

F. Air infiltration: Provide skylight with maximum air leakage through fixed glazing and framing areas of 0.06 cfm/sq. foot of fixed wall area when tested according to ASTM E 283 at a minimum static-air-pressure difference of 6.24 lbf/square foot

G. Water penetration under static pressure: Provide skylight that do not evidence water penetration through fixed glazing and framing areas when tested according to ASTM E 331 at a minimum static-air-pressure difference of 20 percent of positive wind-load design pressure, but not less than 6.24 lbf/ square foot

H. Water penetration under dynamic pressure: Provide skylight that do not evidence water leakage through fixed glazing and framing areas when tested according to AAMA 501.1 under dynamic pressure equal to 20 percent of positive wind-load design pressure, but not less than 6.24 lbf/ square foot.

1. Maximum water leakage: No uncontrolled water penetrating skylight, or water appearing on systems' normally exposed interior surfaces, from sources other than condensation. Water leakage does not include water controlled by flashing and gutters that is drained to exterior and water that cannot damage adjacent materials or finishes.

I. Thermal movements: Provide skylight that allow for thermal movements resulting from the following maximum change (range) in ambient and surface temperatures. Base engineering calculations on surface temperatures of materials due to both solar heat gain and nighttime-sky heat loss.

1. Temperature change (range): As specified in Section 08 14 13.

J. Condensation resistance: Provide skylight with fixed glazing and framing areas having condensation-resistance factor (CRF) of not less than 45 when tested according to AAMA 1503.

2.3 MATERIALS

A. Framing members: Extruded aluminum alloy ASTM B 221, 6063-T5 or 6061-T6.

1. Extrusions: ASTM B 221.
2. Sheet and plate: ASTM B 209.
3. Bars, rods, and wire: ASTM B 211.

B. Concealed flashing: Stainless steel or other corrosion-resistant, non-staining, non-bleeding flashing; compatible with adjacent materials. Do not use galvanized steel.
C. Exposed flashing and closures: Aluminum sheet 0.060-inch thick.
D. Fasteners and accessories: Manufacturer's standard corrosion-resistant, nonstaining, non-bleeding fasteners and accessories; compatible with adjacent materials.

1. Movement joints: Provide slip-joint linings, spacers, and sleeves of material and type recommended by manufacturer.
2. Aluminum retaining cap fasteners: ASTM A 193, Series 300 stainless-steel screws; type as recommended by manufacturer.
3. Connections to Supporting Structure: ASTM A 307, zinc-coated steel fasteners.
4. Anchor bolts: ASTM A 307, Grade A, zinc-coated steel anchor bolts.
5. Concrete or masonry inserts: Zinc-coated cast-iron, malleable-iron, or steel inserts; hot-dip galvanized according to ASTM A 123.

E. Exterior caps: Extruded aluminum alloy 6063-T5. Minimum thickness 0.120-inch.
F. Aluminum flashings: Alloy and temper selected by the fabricator. Minimum thickness 20-gage.
G. Fasteners: Finish fasteners exposed to view to match aluminum framing systems.

1. Exposed to view: 302/304 series stainless steel.
2. Used for bolting aluminum extrusions and their connecting members: 2024-T4 aluminum or stainless steel.
3. Used for the attachment of the skylight to the supporting curbs: Cadmium-plated or hot-dip galvanized steel.

H. Security bars: TBD.
I. Welding electrodes: As recommended by AWS and the aluminum manufacturer for the conditions of use and the alloys being welded.
J. Glass and glazing materials: As indicated on the Drawings and specified in Section 08800.

K. Framing system gaskets and joint fillers: Manufacturer's standard permanent gaskets and joint fillers for sliding, compression, and nonmoving joints.

L. Paint:

1. For finish on exposed surfaces: As specified in Section 08 43 13
2. For concealed ferrous metal surfaces: Tneme-Zinc 90-93 by Tnemec, Zinc-Lock 308 by Porter International, or MZ-4 Epoxy Zinc-Rich Primer by Valspar Corp.
3. Bituminous paint: Cold-applied asphalt mastic paint complying with SSPC-Paint 12, except containing no asbestos, and formulated for 30-mil thickness per coat.

M. Sealants and backer rods:

1. Within assembly: Manufacturer's standard non-drying, non-skinning sealant complying with AAMA 809.2.
2. Between assembly and adjacent materials: As specified in Section 07 92 00.

2.4 GLAZING MATERIALS

A. Glass: As scheduled and specified in Section 08 80 00.

B. Glazing gaskets:

1. Manufacturer's standard pressure-glazing gaskets of elastomer type and hardness selected by skylight and gasket manufacturers to comply with requirements.
2. Provide gasket assemblies with corners sealed with sealant recommended by gasket manufacturer.

C. Spacers, edge blocks, and setting blocks:

1. Manufacturer standard permanent nonmigrating type of elastomer type and hardness selected to comply with requirements.
2. For structural silicone glazing, provide bond-breaking spacer gaskets and bonding setting blocks compatible with silicone sealants.

2.5 FABRICATION

A. General:

1. Fabricate components that, when assembled, will have accurately fitted joints with ends coped or mitered to produce hairline joints free of burrs and distortion.
2. Fabricate components to drain water passing joints and to drain condensation and moisture occurring or migrating within skylight system to the exterior.
3. Fabricate components to ensure that glazing is thermally and physically isolated from framing members.
4. Form shapes with sharp profiles, straight and free of defects or deformations, before finishing.
5. Fit and secure joints with screw and spline, internal reinforcement, or welding.
6. Reinforce members to retain fastener threads.
7. Where fasteners are exposed to view from interior, countersink bolt or screw heads and finish to match framing.
8. Weld components before finishing and in concealed locations to greatest extent practicable to minimize distortion.

B. Maintain the visual design concepts shown, including member sizes, profiles and alignment of components.

C. Fabricate and assemble this work with proper and acceptable provision for noiseless thermal movements, fabrication and erection tolerances, adjoining building component tolerances and dynamic movements.
D. Removable members such as glass stops, fillers or closures shall be extruded, and securely engaged into adjacent components. Fabricate extrusions to eliminate edge projection, bowing, or misalignment at joints.
E. Design and construct moving joints so that they will be, and remain, permanently watertight, and will accommodate weather and building dynamics.
F. For surfaces exposed to view employ only materials free from alloy defects, die marks, scratches, streaks and other surface blemishes.
G. Complete the fabrication and assembly of the components in the shop to the greatest extent possible to minimize field cutting, splicing, fastening, sealing and finishing.

1. Maintain provisions for anticipated movement.
2. Disassemble only as necessary for shipment and erection.
3. Provide secure attachment and support at joints, with hairline, flush fit between contacting members.

H. Complete the cutting, fitting, forming, drilling and grinding of metal before cleaning and applying specified finish. Remove arrises from cut edges and ease edges and corners to a radius of approximately 1/64-inch minimum, 1/32-inch maximum.
I. Welding:

1. Comply with industry standards for assembly and fabrication using system and rods for exposed metals that will provide texture match with materials being joined.
2. Grind exposed welds smooth and flush with parent metal using clean grinding wheels of a type that will not result in stains or discoloration.

J. Finishing: Finish surfaces as follows to be within the color range represented by approved samples.

1. Finish aluminum surfaces exposed to view as specified in Section 08 43 13
2. Prime concealed aluminum surfaces in contact with masonry, concrete or steel with a compatible primer or bituminous paint.
3. Paint steel parts of anchors, anchor inserts, reinforcement and supports with primer specified. After field welding, remove weld slag and touchup primed surface with same primer.
4. Provide minimum DFT of 2 mils for primer and 30 mils for bituminous paint.

PART 3 - EXECUTION

3.1 EXAMINATION

A. Examine adjacent construction and supports.
B. Verify that opening is within allowable tolerances, level, clean, will provide a solid anchoring surface.
C. Correct detrimental conditions before proceeding with installation.

3.2 INSTALLATION

A. General:

1. Do not install defective components including warped, bowed, dented, abraded and broken members. Remove and replace members that have been damaged during installation or thereafter before the time of final acceptance.

2. Do not cut, trim, or weld components during erection, in any manner that would damage the finish, decrease the strength, or result in a visual imperfection or a failure in performance of the work.
3. Return components that require alteration to the shop for refabrication, if possible, or for replacement by new parts.
4. Install components level, plumb, true to line and with uniform joints and reveals. Secure to structure with non-staining and non-corrosive shims, anchors, fasteners, spacers and fillers.
5. Protect unpainted aluminum surfaces that will be in contact with cementitious and dissimilar metals from corrosion and galvanic action by applying a heavy coating of bituminous paint or by separating surfaces with waterproof gaskets or nonmetallic flashing.

B. Assembly and anchorage:

1. Anchor components securely in place by bolting, welding or other permanent mechanical attachment system, which will comply with performance requirements and permit movements intended or necessary.
2. Install slip-joint linings where required to ensure movement as intended or necessary.
3. Remove weld slag and apply primer over welds as specified above.

C. Erection tolerances:

1. Provide adjustment within the assembly to accommodate job variations.
2. Install the work of this Section within the following tolerances.
3. Variation from plane: Limit variation from plane or location shown to 1/8-inch in 10 feet; 1/4-inch over total length.

   a. Alignment: Where surfaces abut in line and at corners and where surfaces are separated by less than 3-inches, limit offset from true alignment to less than 1/32-inch; otherwise, limit offset from true alignment to 1/8-inch.
   b. Maximum offset between glass framing members at corners of glazing pocket must not exceed 1/32-inch.

D. Glazing: Glaze skylight as specified in Section 08 80 00.

3.3 SEALANTS

A. Structural silicone sealant glazing:

1. Prepare surfaces that will contact sealant and install sealant according to sealant manufacturer's written instructions.
2. Preparation includes, but is not limited to, cleaning and priming.
3. Mechanically fasten glazing in place until sealant cures.
4. Clean excess sealant from surfaces before sealant cures.

B. Seal joints between skylight and adjacent construction to be weathertight.
C. Comply with the requirements of Section 07 92 00.

3.4 FIELD QUALITY CONTROL

A. Tests:

1. Perform field water test in compliance with ASTM E 1105, on the completed skylight. Should such testing result in leakage, eliminate the causes of such leakage at no additional cost to the City.
2. Remedial measures must maintain standards of quality and durability and are subject to the Design Consultant's approval.
3. Provide powered scaffold, hose and sufficient personnel to operate scaffold and hose.
4. Perform one test on each skylight assembly after completion, with repeat tests if failures occur.

B. Touchup: Touchup damaged finish as specified in Section 08 43 13, when the results are satisfactory to the Design Consultant, otherwise return the damaged component to the shop for refinishing.

END OF SECTION

SECTION 08 62 15 - TUBULAR SKYLIGHTS

PART 1 - GENERAL

1.1 SUMMARY

A. Section includes tubular skylights consisting of skylight dome, reflective tube, and diffuser assembly in existing and new construction.
B. Related requirements:

1. Division 01 for LEED requirements.
2. Division 07 for conventional skylights and for membrane roofing for flashing skylight base.

1.2 SUSTAINABLE DESIGN REFERENCE

A. USG Green Building Council (USGBC).

1.3 ADMINISTRATIVE REQUIREMENTS

A. The work of this Section requires deferred approval and delegated design, including comprehensive engineering analysis by a qualified professional engineer, using performance requirements and design criteria indicated.

1.4 SUBMITTALS

A. Data: Manufacturer product data sheets on ~~each~~ product proposed to be used, including.

1. Preparation instructions and recommendations.
2. Storage and handling requirements and recommendations.
3. Installation methods.

B. Shop Drawings: Show attachment to supports and a section thru the unit detailing flashing to roof.
C. Test reports: Independent testing agency or evaluation service reports verifying compliance with specified performance requirements.
D. LEED: LEED certification product data as specified in Section 01 81 13, “Sustainable Design Requirements”, for the following LEED credits:

1. Credit MR 4.1 & 4.2, Recycled Content.
2. Credit MR 5.1, Regional Materials, Manufactured Locally.
3. Credit MR 5.2, Regional Materials, Harvested / Extracted Locally.
4. Credit MR 6, Rapidly Renewable Materials.
5. Credit EQ 4.1, Low Emitting Materials, Adhesives & Sealants.

1.5 HANDLING

A. Store products in manufacturer's unopened packaging until ready for installation.

1.6 WARRANTY

A. Skylight manufacturer's standard 10-year warranty.

PART 2 - PRODUCTS

2.1 MANUFACTURERS

A. Solatube International, Inc. (basis of design.)
B. Velux Skylights.
C. Or equal.

2.2 MODELS

A. General: Transparent roof-mounted skylight dome and self-flashing curb, reflective tube, and ceiling level diffuser assembly, transferring sunlight to interior spaces; complying with ICC AC-16. II components made and assembled by one manufacturer.
B. “Brighten Up” series, Model 290 DS, 14 inch with Natural Effect lens.

1. Outer dome glazing: Type DA, 0.125 inch minimum thick injection-molded acrylic classified as CC2 material, UV-inhibiting, impact-modified acrylic blend.
2. Raybender 3000: Variable prism optic molded into outer dome.
3. Light track reflector: 0.015 inch aluminum sheet, with “Spectralight Infinity” finish.
4. Flashing base: One piece, 0.028 inch seamless corrosion-resistant sheet steel, meeting ASTM A 653 or ASTM A 463, providing support for dome and top of tube.
5. Flashing insulator: Type 1 thermal insulation.
6. Dome edge protection band: Type PB for fire-rated roofs, 0.028 inch aluminized steel.
7. Tube ring: 0.090 inch injection-molded high-impact acrylic.
8. Reflective extension tube: TBD.
9. Ceiling ring: 0.110 injection-molded impact-resistant acrylic.
10. Dual-glazed diffuser assembly: TBD.

C. “SolaMaster” series, Model 330 DS-C Penetrating Ceiling, 21-inch daylighting system.

1. Roof doom assembly: Transparent, UV and impact-resistant dome with flashing base supporting dome and top of tube.
2. Glazing: Type DA, 0.143 inch minimum thick injection-molded acrylic classified as CC2 material, UV-inhibiting, impact-modified acrylic blend.
3. Light track reflector: 0.015 inch aluminum sheet, with “Spectralight Infinity” finish.
4. Diffuser assembly: Classic Vsion.
5. Flashing base: One piece, 0.028 inch seamless corrosion-resistant sheet steel, meeting ASTM A 653 or ASTM A 463, providing support for dome and top of tube.
6. Flashing insulator: Type 1 thermal insulation.
7. Dome edge protection band: Type PB for fire-rated roofs, with furred height less than 8 inches, 0.039-inch galvanized steel.
8. Tube ring: 0.090 inch injection-molded high-impact acrylic.
9. Reflective extension tube: Interior finish: Spectralight infinity high reflectance specular finish on exposed reflective surface.

a. For visible sprectrum greater than 99 percent.
b. Total solar spectrum reflectance: less than 80.2 percent.
c. Color: A and B as defined by CIEL shall not exceed plus 2 or be les than minus 2 as determined in accordance to ASTM E 308.

D. Ceiling ring: 0.110 injection-molded impact-resistant acrylic.

E. Dual-glazed diffuser assembly: Ceiling-mounted box transitioning from round tube to square ceiling assembly, supporting light transmitting surface at bottom termination of tube 23.8 inches by 23.8 inches square frame to fit standard suspended ceiling grids or hard ceilings.
F. Lens types: TBD.

2.3 PERFORMANCE

A. Completed assemblies shall be capable of meeting the following performance requirements:

1. Air infiltration test: None at 6.24 psf pressure differential when tested in accordance with ASTM E283.
2. Water resistance test: No leakage at 6.00 psf pressure differential with water rate of 5 gallons/hours/square foot when tested in accordance with ASTM E331.
3. Uniform load test: No breakage, permanent damage to fasteners, hardware parts, or damage to make tubular skylight inoperable, or cause permanent deflection of any section in excess of one percent of its span at either a maximum Positive or Negative Load of 35 psf for the 21-inch unit. Units shall be tested with a safety factor of 3 for positive pressure and 2 for negative pressure, acting normal to plane of roof in accordance with ASTM E 330.
4. Fire resistance:

a. Class ’B’ Burning Brand – The burning brand shall self-extinguish without transferring the fire to the dome Per CBC Class ‘B’ Burning Brand Test. See ASTM E 108 and UL 790.
b. Self-ignition temperature: Greater than 650 degrees F Per CBC. See ASTM D-1929.
c. Smoke density: Rating no greater than 75 Per: U.B.C. Standard 26-5. (See ASTM D-2843-70) or no greater than 450 Per UBC 8-1 (See ASTM Standard E 84) in way intended for use.
d. Rate of burn - minimum burning rate: 2.5 inches/minute Classification CC-2: CBC and ASTM D 635.

2.4 ACCESSORIES

A. Fasteners: Same material as metals being fastened, non-magnetic steel, non-corrosive metal of type recommended by manufacturer, or injection molded nylon.
B. Sealant: As specified in Section 07 92 00 and compatible with roofing membrane.
C. Security bars: 0.375-inch diameter stainless steel bar across opening.

PART 3 - EXECUTION

3.1 EXAMINATION

A. Examine adjacent construction and supports.
B. Verify that openings are within allowable tolerances, plumb, level, clean, and will provide a solid anchoring surface.
C. Correct detrimental conditions before proceeding with installation.

3.2 INSTALLATION

A. Install skylights plumb, in accordance with the approved shop drawings and the skylight manufacturer's instructions. Attach securely to supports.

B. After installation of first unit, field test to determine adequacy of installation. Conduct water test in presence of Design Consultant. Correct if needed before proceeding with installation of subsequent units. Installations must be watertight.

3.3 PROTECTION

A. Protect installed skylights until completion of Project.
B. Touchup, repair or replace damaged components before Substantial Completion.

END OF SECTION

SECTION 08 7100
DOOR HARDWARE

PART 1 – GENERAL

1.1 WORK INCLUDED

A. Door hardware.

B. Thresholds, weather seals and smoke seals.

C. Electrified door hardware.

D. Scope of Work in this Section: Provide door hardware necessary to complete work. Hardware items not specifically specified or identified are to be provided of type and quality suitable to the service required and comparable to other hardware, and at no additional cost to Owner.

1.2 WORK FURNISHED BUT INSTALLED UNDER OTHER SECTIONS

A. Provide templates to:
   1. Section 081113 for door and frame preparation.
   2. Section 081400 for door preparation.
   3. Section 084413 for door and frame preparation.

1.3 RELATED WORK

A. Division 3-Concrete – Core Drilling for Stop Anchors

B. Section 081113-Hollow Metal Doors and Frames.

C. Section 081400-Wood Doors.

D. Section 084113-Aluminum Entrances and Storefronts.

E. Section 087113-Automatic Swing Door Operators

F. Section 099000-Painting

G. Division 26-Electrical

H. Division 28-Security

1.4 REFERENCES

A. Steel Door Institute (SDI) standards as specified.

B. Architectural Woodwork Institute (AWI) as specified.

C. California Building Code (CBC).

D. California Referenced Standards Code (CRSC).

E. Americans with Disabilities Act (ADA) of 1990 criteria as specified.

F. Underwriters Laboratories Inc. standards as specified.

G. National Fire Protection (NFPA) standards as specified.

1.5 QUALITY ASSURANCE

A. Hardware Supplier: Provide hardware from company specializing in supplying institutional door hardware with five years experience and approved by specified hardware manufacturers as a factory direct supplier.

B. Hardware Supplier Personnel: Employ an Architectural Hardware Consultant (AHC) or equivalent to prepare submittal required by this section.

1.6 REGULATORY REQUIREMENTS

A. Conform to CBC "Means of Egress" requirements.

B. Conform to UL10C requirements applicable to positive pressure fire rated doors and frames. Provide all necessary hardware for complete fire labeled opening including ball-bearing hinges, latching hardware, non-flaming fluid closers, smoke seals and intumescent hot seals.

C. Conform to CRSC Standard 12-7-4 requirements applicable to fire rated doors and frames.

D. Conform to applicable requirements of the Americans with Disabilities Act of 1990 regarding accessibility requirements for door and entrance hardware.

E. Conform to applicable requirements of California Building Code regarding exiting and accessibility requirements for door and entrance hardware.

F. All hardware shall meet the requirements of CBC Sections 1133B.2.4, 1133B.2.5, 1133B.2.5.1, and 1133B.2.5.2.

1.7 SUBMITTALS

A. Submit schedule and product data under provisions of Section 01 30 00.

B. Provide five (5) copies of vertical format hardware schedule showing each application including door index, headings, hardware sets, door number and location, door and frame size and material, door and hardware handing, degrees of opening, quantity required, part numbers and finish of each item. Also provide date of jobsite visit to inspect existing conditions.
   1. Projects with multiple buildings and/or multiple floor levels must be submitted so each building and/or floor level is not mixed with another starting with Building A, 1st floor etc.
   2. Architect's review of such schedule does not relieve the Contractor of providing hardware required for the work, whether or not such hardware was inadvertently omitted from this Section.

C. Accompanying the schedules, provide two (2) manufacturer's brochures of each item scheduled, indicating function, finish, dimensions, and related features. No hardware schedule will be accepted for review without submission of such brochure package.

D. Submit manufacturer's certificate of warranty with submittal; otherwise material will be rejected.

E. When alternate manufacturers are proposed by contractor, provide two (2) brochures of proposed items two weeks prior of bid date.

F. Submit only manufacturers specified as approved or alternate.

G. Provide samples indicating hardware design and finish when required by Architect.

1.8 COORDINATION

A. Coordinate work of this Section with other directly affected Sections involving manufacturers of any internal reinforcement for door hardware.

B. In particular, coordinate door preparation in accordance with applicable regulatory and trade standards specified.

C. Review details and conditions prior to ordering hardware. When a door hand is changed during construction, coordinate and change hardware as necessary at no cost to the Owner.

D. Where exact types of hardware specified are not adaptable to finished shape or size of members requiring hardware, provide suitable types having as nearly as practical as the same operation and quality as type specified, subject to Architect's approval.

E. Where doors are thicker than 1-3/4", provide hardware specially fabricated, as required, to be suitable for thicker door.

F. Prior to submittal, carefully inspect existing conditions to verify finish hardware required to complete Work, including sizes, quantities, existing hardware scheduled for re-use, and sill condition material. If conflict between the specified/scheduled hardware and existing conditions, submit request for direction from Architect. Include date of jobsite visit in the submittal.
   1. Submittals prepared without thorough jobsite visit by qualified hardware expert will be rejected as non-compliant.
   2. Contractor attests that the submitted schedule is applicable to project conditions, and that the material meets specified performance level and design intent.

G. Pre-installation training: Provide on-site training by hardware factory personnel on the proper installation of the locks, panic hardware, and door closers prior to any such hardware's installation.

H. Coordinate work with security system (City of Santa Monica Information Systems Department).

1.9 OPERATIONS AND MAINTENANCE DATA

A. Submit operation and maintenance data under provisions of Division 1.

B. Include data on operating hardware. Lubrication requirements and inspection procedures related to preventive maintenance.

1.10 DELIVERY, STORAGE, AND HANDLING

A. Deliver products to site under provisions of Division 1.

B. Store and protect products under provisions of Division 1.

C. Package hardware items individually; label and identify packages with door opening code to match hardware schedule.

1.11 MAINTENANCE MATERIALS

A. Provide special wrenches and tools applicable to each different or special hardware component.

B. Provide maintenance tools and accessories supplied by hardware component manufacturer.

1.12 WARRANTY

A. Provide two year guarantee against defects on hardware, including electrical components, five years warranty for cylindrical locks, mortise locks and exit devices and ten year warranty for surface, floor concealed closers and continuous hinges.

B. Submit guarantee on form provided in Documents.

C. Submit manufacturer's certificate of warranty with submittal, otherwise material will be rejected.

PART 2 -PRODUCTS

2.1 DOOR HARDWARE CRITERIA

A. Manufacturers

Item	Specified Manufacturer	Approved Alternates
Hinges:	(MCK)-McKinney	Stanley, Bommer, Hager
Continuous Hinges:	(MAR)-Markar	McKinney, Pemko, Select, ABH
Track Hardware:	(KNC)-K.N. Crowder	Hafele
Floor Closers and Pivots:	(RIX)-Rixson	None
Push/Pull Plates:	(TRM)-Trimco	Rockwood
Pulls:	(ROC)-Rockwood	Tice Industries
Metal Door Flush Bolts:	(DCI)-Door Controls	Ives
Wood Door Flush Bolts:	(DCI)-Door Controls	None
Surface Bolts:	(TRM)-Trimco	Rockwood, Ives
Locks and Latchsets:	(SCH)-Schlage	CITY STANDARD
Holdback Deadlatches:	(ACC)-Accurate Lock	None
N.S. Deadlocks:	(ARC)-Adams Rite	None
Vertical Rod Locks:	(SAR)-Sargent	None
Cylinders:	(SCH)-Schlage Primus XP	CITY STANDARD
Exit Devices:	(VON)-Von Duprin	CITY STANDARD
Coordinators:	(DCI)-Door Controls	Ives
Surface Closers:	(LCN)-LCN	CITY STANDARD
Magnetic Holders:	(RIX)-Rixson	Norton, LCN
Wall Stops:	(TRM)-Trimco	Rockwood, Ives
Floor Stops:	(TRM)-Trimco	Rockwood
Overhead Stops:	(RIX)-Rixson	Glynn Johnson, ABH
Kick & Mop Plates:	(TRM)-Trimco	Rockwood, Ives, Tice
Lock Trim Protectors:	(ROC)-Rockwood	Tice
Edge Guard/Astragals:	(MAR)-Markar	Pemko, McKinney, Select
Mortise Edge Guards:	(ROC)-Rockwood	Tice, Trimco
Seals & Sweeps:	(PEM)-Pemko	Zero, National Guard
Seals & Sweeps:	(ZER)-Zero	None
Adhesive Seals x 3M Tape:	(ZER)-Zero	None
Auto Door Bottoms:	(ZER)-Zero	None
Sound Seals:	(ZER)-Zero	Nonel
Z-Brackets:	(TIC)-Tice Industries	Or Equal
Thresholds:	(PEM)-Pemko	Zero, National Guard
Thresholds:	(ZER)-Zero	National Guard, Pemko
Coat Hooks:	(BOB)-Bobrick	Or Equal
Silencers:	(TRM)-Trimco	Ives, Rockwood

Alarm Contacts:	(GES)-G.E. Security	None

2.2 HINGES

A. Unless noted otherwise, provide steel hinges, with finish as shown in schedule. Provide non-ferrous hinges at exterior doors and where specified.

B. Provide hinges in accordance with following schedule:
   1. Doors up to 4 feet high: 2 hinges.
   2. Doors 4 feet to 7 feet 5 inches high: 3 hinges minimum.
   3. Doors greater than 7 feet 5 inches high: 4 hinges.
   4. Doors up to 3 feet wide, standard weight: 4-1/2" x 4-1/2" hinges.
   5. Doors over 3’0" wide to under 4’0” wide, standard weight: 5" x 4-1/2".
   6. Doors 4'0" wide, heavy weight: 5" x 4-1/2".
   7. Provide heavy-weight hinges where specified.
   8. At doors weighing 150 lbs. or more, furnish 5” high hinges.
   9. At doors in aluminum frames: standard weight 4-1/2” x 4-1/2” hinges, or continuous hinges as scheduled.

C. Unless otherwise noted or required, provide full mortise hinges with non-rising loose pins.

D. Provide set screw (NRP) type at key lockable outswing doors to prevent pin removal when door is in closed position. Provide security stud at key lockable exterior outswing doors.

E. Where necessary to maintain door clearance at jamb trim, frame conditions, door reveals and similar conditions, provide wide throw hinges as approved by the Architect.

F. Continuous Hinges
   1. To be barrel-type of 14 gauge 304 stainless steel, 14 gauge 1012 cold-rolled steel or 6063-T5 aluminum material with 0.25" diameter stainless steel Teflon-coated pin. Gear types are prohibited.
   2. Hinge guard models to be furnished with Adjusta-screw fasteners.
   3. Provide stainless steel hinges with self-lubricating fiber-reinforced polymer bearings (“MB” option) for noise-free operation and resistance to dust and dirt accumulation.
   4. Provide stainless steel hinges with welded ends at outswing doors; provide aluminum hinges with hospital tips at outswing doors.
   5. Where necessary to maintain door clearance at jamb trim, frame conditions, door reveals and similar conditions, provide wide throw hinges as approved by the Architect. Provide wide throw hinges as required for doors swinging 180° into a room to avoid conflict between the door closer cover and the wall or frame.
   6. Provide with factory cut-outs for mortise hardware that must penetrate the hinge (e.g. concealed auto door bottoms, concealed power transfer, etc.) where they occur.

G. Provide mortar guard frame box by hinge manufacturer for electric hinges where not provided by frame manufacturer.

2.3 KEYING

A. Provide Medeco M^3 32-Series large format interchangeable core cylinders with temporary construction cores.

B. Key cylinders to be furnished with temporary brass construction cores. Provide 30 construction masterkeys and 2 construction control keys.

C. All permanent cores and keys will be provided by the Owner.

D. Upon completion of the project, the Contractor shall remove the construction cores and return the construction cores for credit. The Owner shall be responsible for the installation of the permanent cores.

E. Provide cylinder collars and spacers to match key cylinder finish for each locking device. Provide collar and spacers to ensure a tight, secure fit of the key cylinder to the locking device with no gaps or spaces.

2.4 LOCKSETS, LATCHSET AND STRIKES

A. Unless noted otherwise in schedule, locksets, latchsets, cylinders and component parts shall be the products of single manufacturer.

B. Provide strikes at locks with curved lip strike of sufficient length to protect trim and jamb. Each strike will include wrought strike box (similar to Tice Industries No. 1502). At outswing doors with overlapping astragals installed on the pull side, provide a flat strike with 7/8" lip-to-center dimension.

C. Mortise Locks:
   1. Lock Body shall include quick reversibility mechanism without removing lock body cover.
   2. Provide cast or forged levers only. Roses, where specified, shall be wrought. Escutcheons, where specified, shall be cast or forged.

D. Unless noted otherwise, provide 2-3/4 inch backset.

E. Lock Throw: Comply with UL requirements for throw of bolts and latch bolts on rated fire openings.

F. Auto Flush Bolts: Minimum ½" throw latch bolts, fully automatic extending into top strike and dust proof strike at sill. Provide longer rods as necessary for doors exceeding 7'0" in height. Where auto flush bolts are specified as top bolts only with bottom fire bolt at wood pairs rated above 20-minutes, provide bottom auto flush bolt and dust proof strike (DCI 82 or approved equal) in lieu of specified bottom fire bolt. Provide type of auto flush bolt required by door material (metal or wood), regardless of type specified.

2.5 PANIC EXIT DEVICES

A. Where specified, provide panic exit device with required UL labels. Where panic device is required on fire rated doors, provide UL label with supplementary marking on door and hardware indicating compliant fire exit hardware.

B. Provide modern push-pad type, reversible exit devices. Provide exit device manufacturer's shims as required to clear glass lite frames.

C. Push-pad shall be mounted at a height of not less than 30 inches (762mm) nor more than 44 inches (1118mm) above floor. The unlatching force shall not exceed 15 pounds (66.72N) when applied in the direction of travel per CBC 1133B.2.5.

D. Exit Devices shall comply with CRSC Standard 12-10-3 and CBC 1008.1.9.

E. Provide exit devices levers of design to match lock levers.

2.6 DOOR CLOSERS

A. Surface mounted closers to be full rack and pinion type with cast shell.
   1. Provide drop brackets, mortise shoes, and long arms as required.

2. Provide non-handed door closers with multi-sized springs, with separate adjustable valves for latch, sweep speed, and backcheck.
3. Template and adjust closers per manufacturer's recommendations and to meet accessibility requirements. When used in conjunction with an overhead stop, provide special templates and brackets as required.
4. Where regular arm closers are specified at doors that must swing past 120°, revise closer to LCN 4040T-Series (top jamb) x 4040TJ-18 plate and provide minimum 4-1/2" wide hinges.
5. Where used in conjunction with an overhead stop, provide special template, special arms, back plates, and other items as needed to allow the closer to be installed without conflicting with the overhead stop.
6. Provide 5th and 6th hole spacers for parallel arm mount arms, sized appropriately for gap to frame.

2.7 MAGNETIC HOLDERS

A. Provide magnetic holders with tri-volts coils only.

B. Provide assemblies consisting of an armature contact plate with adjustable mounting pivot.

C. Use extensions as necessary to align door at parallel with wall.

2.8 PROTECTIVE PLATES AND EDGE GUARDS

A. Provide plates as scheduled, with all edges heavy beveled (not pencil beveled). Provide plates in scheduled thickness. Where armor plates are specified at rated doors, provide with stamped or engraved U.L. listing (not a U.L. sticker).

B. Provide mop plates as scheduled.

C. Edge guards:
1. Provide with cut-outs for mortised door hardware.
2. Provide with bevel to match door bevel.
3. Mortise versions: provide inside dimension for exact door thickness.
4. Surface versions: provide outside dimension for exact door thickness.
5. Provide with countersunk fasteners in edge of door only; at surface versions, provide fasteners and threaded studs that allow the edge guard plumbness to be adjusted on the door.
6. Edge guards installed at leading edge of door unless specified otherwise.

2.9 PUSH/PULL PLATES

A. Concealed Fasteners: Provide manufacturer's special concealed fastener system for installation; through-bolted for matched pairs, but not for single units.

2.10 STOPS

A. Provide a floor or wall stop at every door.

B. Provide carpet risers for floor stops where required.

C. Where specified floor or wall stop would present a pedestrian hazard or cannot be used, furnish Rixson model overhead concealed stop.

D. Template overhead stops for maximum available swing.

2.11 SILENCERS

A. Provide silencers at hollow metal or wood door frames that are without seals in quantities as follows:
   1. Single Doors: 3 silencers
   2. Pairs: 4 silencers

2.12 SEALS

A. Provide seals complete with retainers, fasteners and trim.

B. Provide UL listed seals at rated openings.

C. Provide UL listed intumescent hot seal at fire rated wood doors when doors are not being furnish with intumescent hot seal.

D. Unless noted otherwise, furnish fastener-applied silicone or neoprene seals at door jamb and head conditions. Use of vinyl seal prohibited.

E. Where flat bar head seals are specified to accommodate hardware mounted to the underside of the frame stop, furnish factory-cut as required for frame stops narrower than the standard seal width.

F. Where specified, furnish solid neoprene seals complying with MilSpec R6855, Class II, Grade 40.

G. Provide automatic door bottoms with an integral magnet to assist in an even dropping of the door bottom seal when the door closes. Provide automatic door bottoms with special door edge mounting plates that allow the automatic door bottoms to be removed for servicing without demounting the door.

H. Z-brackets: At doors with adjustable stop-mounted seals that prevent other hardware items from being mounted directly to the frame stop (e.g., parallel arm closers, rim panic strikes, coordinators, etc.), provide custom profile Z-brackets to allow mounting of the hardware without cutting or penetrating the frame seals. Provide Z-brackets of minimum 9 gauge thickness steel, prime-coated for painting. Provide Z-brackets of width to allow hardware item to be securely fastened to the bracket, width no more than the hardware item surface. Where coordinators must be installed on Z-brackets, provide Z-bracket of full width across frame head. Provide Z-brackets with countersunk fasteners to attach to the frame stop or rabbet (varies depending upon frame profile).

I. At doors in aluminum frames, omit seals. Seals will be provided by aluminum frame section.

J. Provide adhesive seals with genuine 3M adhesive tape for best adhesion.

K. Overlapping astragals: Install on secure (outside) side of door. Provide with fastener hole pattern to avoid conflict with mortised hardware in the door.

2.13 THRESHOLDS

A. General: Except as otherwise indicated furnish standard metal threshold unit of type, size and profile as shown or scheduled. Where required by fire code, furnish appropriate model thresholds at openings where combustible floor material extends through the door opening. Provide threshold as indicated in details. Provide with ¼-20 stainless steel fasteners with combo anchors, finished to match the threshold.

B. Thresholds must comply with the requirements of ADA and ANSI-117.1 and CBC section 1133B.2.4.1.

C. Where saddle thresholds are specified listing only threshold height, provide full saddle threshold assemblies (welded and drilled) of specified height, with depth from interior frame face to 3/8-inch past exterior frame face.

2.14 FINISHES

A. Finishes are identified in Schedule at end of this Section.

B. Where finish not shown, match finish of lockset.

C. Provide fasteners matching in finish, base material and color.

D. Provide anti-microbial lifetime coating where specified on lever handles, panic bars, door pulls and push/pull plates.

2.15 FASTENERS

A. Fasteners: Provide hardware manufacture to conform to publish templates, generally prepared for machine screws installation.

B. Install hardware with manufacturer supplied screws for each item.

C. Provide screws for installation, with each hardware item. Provide Phillips flat-head screws except as otherwise indicated. Finish exposed (exposed under any condition) screws to match hardware finish or, if exposed in surfaces of other work, to match finish of such other work as closely as possible, including "prepared for paint" in surfaces to receive painted finish.

D. Provide concealed fasteners for hardware units which are exposed when door is closed, except to extent no standard units of type specified are available with concealed fasteners.

E. Provide Zero #226 ¼-20 stainless steel machine screws and anchors for all thresholds.

F. Provide countersunk screws for all kick, mop, and armor plates.

2.16 COAT HOOKS

A. Omit coat hooks where specified at doors with half or full glass lites.

B. Where coat hooks are specified at wheelchair accessible rooms, provide two coat hooks per door, installed at normal height and at wheelchair accessible height.

2.17 ELECTRICAL DRAWINGS

A. Provide custom point-to-point wiring diagram for each electric hardware application.

B. Provide custom electric hardware elevation riser diagram for each hardware application.

2.18 Z-BRACKETS

A. Provide custom Z-brackets by Tice Industries (or approved equal) wherever stop-applied hardware cannot otherwise be mounted because of stop-applied frame seals and/or coordinators.

B. Provide Z-brackets of custom dimensions to fit frame profile, frame seals, and hardware mounted to brackets, with minimal projection into door opening.

C. Provide Z-brackets of dimensions to be able to securely mount to frame rabbet. Provide of aluminum material of sufficient thickness to withstand door and hardware action.

D. Where intended for coordinator installation, provide full width and provide additional brackets as needed for surface closer installation over coordinator.

2.19 HARDWARE FOR DOORS THICKER THAN 1-3/4”

A. At doors thicker than 1-3/4”, provide all hardware with modifications and accessories necessary to meet the specified hardware intent, but suitable for the actual door thickness.

PART 3 - EXECUTION

3.1 INSPECTION

A. Verify that doors and frames are ready to receive work and dimensions are as indicated on shop drawings, instructed by the manufacturer.

B. Beginning of installation means acceptance of existing conditions.

3.2 INSTALLATION

A. A QUALIFIED MECHANIC skilled in the application of institutional grade builder’s hardware shall install hardware.

B. Install hardware in accordance with manufacturer's instructions and requirements of SDI, ANSI/NFPA 80, AWI, and BHMA. Select applicable standardbased on door function, type and regulatory criteria.

C. Install hardware in accordance with NFPA 80 in fire labeled doors.

D. Where door is designated as receiving new hardware, package and label hardware by type and function, and deliver to Owner.

E. Predrill pilot holes in wood for screws. Drill and tap for surface mounted hardware on metal. Set hinge leaf snug and flat in mortises, turn screws to flat seat [do not drive].

F. Mount surface closers on side of door away from corridor, inside rooms or in stairs. Install regular or parallel rigid arm closers as required.

G. Provide ADEQUATE BACKING in stud partitions for the attachment of all respective finish hardware.

H. Floor mounted door stops are to be installed at maximum of four inches from the face of the wall or partition.

I. Install thresholds in full bed of sealant at front and side edges.

3.3 INSTALL HARDWARE USING TEMPLATES PROVIDED BY HARDWARE ITEM MANUFACTURER

A. Prior to finishing door, fit hardware to door, utilizing fasteners and templates as specified.

B. Remove hardware, carefully label and store. Where door exists and is designated to receive new finish, remove existing hardware.

C. Re-install after door finish is complete

3.4 UNLESS NOTED OTHERWISE OR SHOWN ON DRAWINGS, MOUNT HARDWARE IN

ACCORDANCE WITH THE FOLLOWING CRITERIA:

A. Latchset and Lockset handle: 38 inches above finish floor. Verify manufacturer's template with door design.

B. Glass locks: 40 inches above finish floor to center line. Verify manufacturer's template with door design. Coordinate with pulls to ensure easy access to key cylinder.

C. Auxiliary Locks: 40 inches to center line.

D. Panic Devices: 40 inches above floor; at storefront doors, aligned with center muntin on adjacent window wall. Verify manufacturer's template with door design.

E. Push and Pull Plates: 44 inches to center line.

F. Door Pulls: 44 inches above finish floor to center line. Coordinate with locks to ensure easy access to key cylinder.

3.5 ADJUST CLOSER OPERATING EFFORT CONFORM TO CALIFORNIA BUILDING CODE SECTION 1133B.2.5

A. Exterior and Interior Doors: 5.0 pounds force. The operating force may be increased by the authority having jurisdiction, but not to exceed 15.0 pounds, in accordance with CBC.

3.6 ADJUST CLOSER DELAY AND OPERATING SPEEDS TO COMPLY WITH REQUIREMENTS OF CALIFORNIA BUILDING CODE AND THE AMERICANS WITH DISABILITIES ACT ARCHITECTURAL GUIDELINES, ARTICLE 4.13.10

A. The sweep period of the door closers shall be adjusted so that from an open position of 70 degrees, the door will take at least 3 seconds to move to a point 3 inches from the latch, measured to the leading edge of the door.

B. Closer Certification: Provide written certification, signed by door closer representative, stating closers were inspected and installed in accordance with specified opening force and delay requirements.

3.7 CLEAN AND ADJUST

A. At completion, all hardware shall be left clean and free from disfigurement. Contractor shall make a final adjustment to all door closers and other items of hardware. Where hardware is found defective, repair, replace, or otherwise correct as directed.

B. Adjust and check each operating item of hardware and each door, to ensure proper operation or function of every unit. Adjust hardware so that moving parts operate freely, without bind, or excessive play. Hardware shall be free of paint, corrosion, or damage of any kind.

3.8 POST-INSTALLATION INSPECTION

A. Provide written certification, signed by the hardware manufacturer representative, stating the locks, panics, and door closers were inspected and installed in accordance with specified operational requirements.

3.9 DOOR HARDWARE SCHEDULE

HW-1

M.O. Toilet
Each Door to Have: (WD/GLD x ~~WDF~~PFSF)

			NR	
4	Hinges	TA386	630	MCK
1	Push/Pull Plate Set	1895-4FHT B4E-HVY CTSK x TRIMGUARD x 4-INCH WIDE PLATES	630	TRM
1	Holdback Deadlatch	H7804 x 7800ADA-CA x LASER-ENGRAVE HOLDBACK INSTRUCTIONS x OMIT DEADLATCH x STRIKE BOX	619	ACC
1	Cylinder	MORTISE I/C-X	619	SCH
1	Permanent Core	20-740XP	626	SCH
1	Closer	4041XP-DEL SRI SNB	*689	LCN
1	Kick Plate	KO050 9” x 2” LDW B4E-HVY CTSK	630	TRM
1	Mop Plate	KM050 4” x 1” LDW B4E-HVY CTSK	630	TRM
1	Floor Stop	1215CKU	626	TRM
~~1~~	~~Threshold~~	~~PER DETAILS OR STONE AS REQ’D~~	~~AL~~	~~PEM~~
1	Threshold	69A x #226	AL	ZER
1	Set Seals	188_-S x 3M TAPE x MITRED	TBD	ZER

* FACTORY-FINISH SNB NUTS TO MATCH DOOR FINISH.
FORWARD HOLDBACK DEADLATCH TO TRIMCO FOR MATING TO PUSH/PULL PLATE SET.

HW-2

S.O. Toilet
Each Door to Have: (WD~~/GLD~~ x ~~WDF~~PFSF)

			NR	
4	Hinges	TA314	630	MCK
1	Keyed Occupancy Privacy	L9496T 03A L583-363	630AM	SCH
1	Permanent Core	20-740XP	626	SCH
1	Closer	4041XP-DEL SRI SNB	*689	LCN
1	Kick Plate	KO050 ~~9~~10” x 2” LDW B4E-HVY CTSK	630	TRM
1	Mop Plate	KM050 4” x 1” LDW B4E-HVY CTSK	630	TRM
1	Floor Stop	1215CKU	626	TRM
~~1~~	~~Threshold~~	~~PER DETAILS OR STONE AS REQ’D~~	~~AL~~	~~PEM~~
1	Threshold	69A x #226	AL	ZER
1	Automatic Door Bottom	369A-Z49	TBD	ZER
1	Set Seals	188_-S x 3M TAPE x MITRED	TBD	ZER

* FACTORY-FINISH SNB NUTS TO MATCH DOOR FINISH.

HW-2A

S.O. Toilet
Each Door to Have: (WD~~/GLD~~ x ~~WDF~~PFSF) NR

4	Hinges	TA386	630	MCK
1	Keyed Occupancy Privacy	L9496T 03A L583-363	630AM	SCH
1	Permanent Core	20-740XP	626	SCH
1	Closer	4041XP-DEL-EDA SNB x SRI	*689	LCN
1	Kick Plate	KO050 ~~9~~10" x 2" LDW B4E-HVY CTSK	630	TRM
1	Overhead Stop	2-SERIES	630	RIX
~~1~~	~~Threshold~~	~~PER DETAILS OR STONE AS REQ'D~~	~~AL~~	~~PEM~~
1	Threshold	69A x #226	AL	ZER
1	Automatic Door Bottom	369A-Z49	TBD	ZER
1	Set Seals	188_-S x 3M TAPE x MITRED	TBD	ZER

* FACTORY-FINISH SNB NUTS TO MATCH DOOR FINISH.

HW-3

Branch Manager
Each Door to Have: (~~WD~~AL/GLD x ~~WDF~~PFSF) NR

4	Hinges	TA714	652	MCK
1	Office Lock	L9056T 03A L583-363	630AM	SCH
1	Permanent Core	20-740XP	626	SCH
~~1~~	~~Kick Plate~~	~~KO050 9" x 2" LDW B4E-HVY CTSK~~	~~630~~	~~TRM~~
1	Floor Stop	1215CKU	626	TRM
1	Set Seals	188_-S x 3M TAPE x MITRED	TBD	ZER

~~* FACTORY-FINISH SNB NUTS TO MATCH DOOR FINISH.~~

HW-4

Group Study
Each Sliding Door to Have: (~~WD/GLD x WDF~~HAWORTH "ENCLOSE") NR

~~1~~	~~Track Set~~	~~CFT-201-SS COMPLETE KIT~~	~~630~~	~~KNC~~
~~1~~	~~Sliding Door Lock~~	~~1076-RA-6204-SS-B-2-1/2" x LESS I/S T-TURN~~	~~630~~	~~FSB~~
1	Cylinder	MORTISE I/C-X	626	SCH
1	Permanent Core	20-740XP	626	SCH

BALANCE OF HARDWARE BY DOOR MANUFACTURER.
~~INSTALL DOOR OPEN TRACK STOP SO THAT DOOR PROTRUDES TO OPERATE TRIM.~~

HW-4A

Staff Lounge
Each [CR, REX, DPS] Door to Have: (WD~~/GLD~~ x ~~WDF~~PFSF) NR

3	Hinges	TA786	652	MCK
1	Transfer Hinge	TA786-CC8	652	MCK
1	Electric Lockset	L9080TEU-RX 03A	630AM	SCH
1	Permanent Core	20-740XP	626	SCH
1	Closer	4041XP x 4040-18TJ x ST1630	*689	LCN
1	Kick Plate	KO050 ~~9~~10" x 2" LDW B4E-HVY CTSK	630	TRM
1	Overhead Stop	2-SERIES	630	RIX
~~1~~	~~Threshold Assembly~~	~~PER DETAILS~~	~~AL~~	~~PEM~~
1	Auto Door Bottom	369A-Z49	TBD	ZER
1	Set Seals	188_-S x 3M TAPE x MITRED	TBD	ZER
1	Alarm Contact	1076D	TBD	GES

CONDUIT BY DIVISION 26.
CARD READER, LOW VOLTAGE POWER, AND WIRING BY DIVISION 28.

HW-4B

Workroom
Each Door to Have: (~~WD~~AL/GLD x ~~HMF~~PFSF) NR

1	Continuous Hinge	~~HG-305~~FM-300-MB-WEP	630	MAR
1	Office Lock	L9056T 03A	630AM	SCH
1	Permanent Core	20-740XP	626	SCH
1	Closer	4041XP x 4040-18TJ x ST1630	*689	LCN
~~1~~	~~Kick Plate~~	~~KO064 9" x WIDTH SNUG TO EDGE GUARDS B4E-HVY CTSK~~	~~630~~	~~TRM~~
~~1~~	~~Edge Guard~~	~~EG-308-AS (VERIFY BEVEL) CUT:HDWE~~	~~630~~	~~MAR~~
1	Overhead Holder-Stop	2-SERIES	630	RIX
1	Set Seals	488_-S x 3M TAPE x MITRED	TBD	ZER

HW-4C

Pantry
Each Door to Have: (WD x ~~WDF~~PFSF) NR

4	Hinges	TA314	630	MCK
1	Classroom Lock	L9070T 03A	630AM	SCH
1	Permanent Core	20-740XP	626	SCH
1	Kick Plate	KO064 10" x WIDTH SNUG TO EDGE GUARDS B4E-HVY CTSK	630	TRM
1	Mop Plate	KM050 10" x WIDTH SNUG TO EDGE GUARDS B4E-HVY CTSK	630	TRM
2	Mortise Edge Guards	302B FULL HEIGHT CUT:HDWE	630	ROC
1	Overhead Holder-Stop	2-SERIES	630	RIX
1	Set Seals	188_-S x 3M TAPE x MITRED	TBD	ZER

FORWARD MORTISE EDGE GUARDS TO WOOD DOOR MANUFACTURER FOR FACTORY INSTALLATION.

HW-4D

Storage
Each Door to Have: (WD x ~~HMF~~PFSF) NR

1	Continuous Hinge	HG-305-MB-WEP	630	MAR
1	Utility Lock	L9060T 03A	630AM	SCH
2	Permanent Cores	20-740XP	626	SCH
1	Armor Plate	KO064 34” x WIDTH SNUG TO EDGE GUARDS B4E-HVY CTSK	630	TRM
1	Overhead Holder-Stop	2-SERIES	630	RIX
~~1~~	~~Threshold Assembly~~	~~PER DETAILS~~	~~AL~~	~~PEM~~
1	Set Seals	488_-S x 3M TAPE x MITRED	TBD	ZER

HW-5

Janitor
Each Door to Have: (HMD x ~~HMF~~PFSF) NR

4	Hinges	TA386	630	MCK
1	Storeroom Lock	L9080T 03A	630	SCH
1	Permanent Core	20-740XP	626	SCH
1	Closer	4041XP- EDA SNB x SRI	*689	LCN
1	Kick Plate	KO064 10” x 2” LDW B4E-HVY CTSK	630	TRM
1	Overhead Holder-Stop	2-SERIES	630	RIX
1	Set Seals	188_-S x 3M TAPE x MITRED	TBD	ZER

* FACTORY-FINISH SNB NUTS TO MATCH DOOR FINISH.

HW-5A

I.T.
Each [CR, REX, DPS] Door to Have: (~~HMD~~ WD x ~~HMF~~PFSF) NR

3	Hinges	TA386	652	MCK
1	Transfer Hinge	TA386-CC8	652	MCK
1	Electric Lock	L9080TEU-RX 03A	630	SCH
1	Permanent Core	20-740XP	626	SCH
1	Kick Plate	KO050 10” x 2” LDW B4E-HVY CTSK	630	TRM
1	Overhead Stop	2-SERIES	630	RIX
~~1~~	~~Threshold~~	~~PER DETAILS~~	~~AL~~	~~PEM~~
1	Auto Door Bottom	369A-Z49	TBD	ZER
1	Set Seals	188_-S x 3M TAPE x MITRED	TBD	ZER
1	Alarm Contact	1076D	TBD	GES

CONDUIT BY DIVISION 26.
CARD READER, LOW VOLTAGE POWER, AND WIRING BY DIVISION 28.

HW-6

Storage
Each Sliding Pocket Door to Have: (WD~~/GLD~~) NR

1	Pocket Door Kit	CROWDERFRAME TYPE C	---	KNC
1	Door Catch/Stop	CDC-411 (DOOR OPEN POSITION)	---	KNC
1	Door Stop	C-100HD (DOOR CLOSED POSITION)	---	KNC
1	Mortised Guide Channel	C-914 (IN DOOR)	---	KNC
1	Floor-Mounted Guide	C-913	---	KNC
1	Sliding Door Lock	1076-RA-6204-SS-B-2-~~1/2~~3/4" x L:I/S T-TURN	630	FSB
1	Cylinder	MORTISE I/C-X	626	SCH
1	Permanent Core	20-740XP	626	SCH

INSTALL DOOR OPEN TRACK STOP/HOLDER SO THAT DOOR PROTRUDES SUFFICIENTLY FROM POCKET TO OPERATE TRIM.

HW-6A

Storage
Each Sliding Barn Door to Have: (WD) NR

1	Track Set	CFT-201-SS COMPLETE KIT	630	KNC
1	Pull	RM3110-11" x MTG 1HD (OUTSIDE)	630	ROC
1	Flush Pull	1061 (INSIDE)	626	TRM
1	Sliding Door Lock	1877 x 4550 x LEVER MOUNTING HEIGHT 38" ABOVE FINISHED FLOOR	628	ARC
1	Cylinder	MORTISE I/C-X	626	SCH
1	Permanent Core	20-740XP	626	SCH

INSTALL DOOR OPEN TRACK STOP SO THAT DOOR PROTRUDES SUFFICIENTLY TO OPERATE TRIM.

HW-6B

Book Return
Each Roll-up Door to Have: NR

2	Cylinders or 1 Padlock	TYPE REQUIRED I/C-X	626	SCH
2	Permanent Core	20-740XP	626	SCH

BALANCE OF HARDWARE BY ROLL-UP DOOR SECTION.

HW-6C

Community Room
Each Sliding Door to Have: NR

2	Cylinders	TYPE REQUIRED I/C-X	626	SCH
2	Permanent Core	20-740XP	626	SCH

BALANCE OF HARDWARE BY DOOR MANUFACTURER.

HW-6D

Roof
Each Roof Hatch to Have: NR

1	Padlock	TYPE REQUIRED I/C-X	626	SCH
1	Permanent Core	20-740XP	626	SCH

BALANCE OF HARDWARE BY DOOR MANUFACTURER.

HW-7

Janitor
Each Pair to Have: (WD x ~~WDF~~PFSF) NR

8	Hinges	TA386	630	MCK
2	Manual Flush Bolts	790F (12” & 24” EXTENSIONS)	626	DCI
1	Dust Proof Strike	82	626	DCI
1	Storeroom Lock	L9080T 03A x 7/8” LTC STRIKE	630	SCH
1	Permanent Core	20-740XP	626	SCH
1	Astragal	355_S	TBD	PEM
2	Kick Plates	KO064 10” x 1” LDW B4E-HVY CTSK	630	TRM
2	Overhead Holder-Stops	2-SERIES	630	RIX
1	Set Seals	188_-S x 3M TAPE x MITRED	TBD	ZER

HW-7A

A/V Closet
Each Pair to Have: (WD x WDF) NR

8	Hinges	TA786	652	MCK
2	Manual Flush Bolts	790F (12” & 24” EXTENSIONS)	626	DCI
1	Dust Proof Strike	82	626	DCI
1	Storeroom Lock	L9080T 03A x 7/8” LTC STRIKE	630	SCH
1	Permanent Core	20-740XP	626	SCH
1	Astragal	355_S	TBD	PEM
2	Overhead Holder-Stops	2-SERIES	630	RIX
1	Set Seals	188_-S x 3M TAPE x MITRED	TBD	ZER

HW-8

Electrical
Each Door to Have: (CLAD-HMD x HMF) NR

4	Wide Throw Hinges	T4A3386 5" x 8"	630	MCK
~~1~~	~~Anti-Vandal Pull~~	~~1096HASP~~	~~630~~	~~TRM~~
1	Edge Pull	RM754-6" x VERIFY OVERALL THICKNESS x SPECIAL SCREW PATTERN	630	ROC
1	Storeroom Lock	L9080T LLL 03A ~~LESS OUTSIDE TRIM~~, EO	630	SCH
1	Permanent Core	20-740XP	626	SCH
1	Overhead Holder-Stop	1ADJ-SERIES	630	RIX
~~1~~	~~Threshold~~	~~PER DETAILS~~	~~AL~~	~~PEM~~
1	Threshold Assembly	¼" HIGH SADDLE x DEPTH FROM INSIDE FRAME FACE TO OUTSIDE FACE OF CLADDING x WELDED x DRILLED	AL	PEM
1	Applied Stop Drip	1842AS (ON TOP OF THRESHOLD)	AL	PEM
1	Auto Door Bottom	369A-Z49	AL	ZER
~~1~~	~~Door Sweep~~	~~PER DETAILS~~	~~AL~~	~~PEM~~
1	Set Seals	332CS	AL	PEM
~~1~~	~~Drip~~	~~PER DETAILS~~	~~AL~~	~~PEM~~

HW-8.1

Roof
Each [DPS] Door to Have: (HMD x HMF) NR

3	Hinges	TA386	630	MCK
1	Storeroom Lock	L9080T 03A	630	SCH
1	Permanent Core	20-740XP	626	SCH
1	Closer ~~(I/S Doors)~~	4041XP x 4040-18TJ x ST1630	689	LCN
~~1~~	~~Closer (O/S Doors)~~	~~4041XP-EDA~~	~~689~~	~~LCN~~
1	Overhead Holder-Stop	1ADJ-SERIES	630	RIX
1	Threshold	~~PER DETAILS~~185T	AL	PEM
~~1~~	~~Door Sweep~~	~~PER DETAILS~~	~~AL~~	~~PEM~~
1	Drip	345A (@ BOTTOM OF DOOR)	AL	PEM
1	Set Seals ~~(I/S Doors)~~	332CS	AL	PEM
~~1~~	~~Set Seals (O/S Doors)~~	~~2891AS CSK SCREWS~~	~~AL~~	~~PEM~~
~~1~~	~~Drip~~	~~PER DETAILS~~	~~AL~~	~~PEM~~
1	Alarm Contact	1076D	TBD	GES

CONDUIT BY DIVISION 26.
LOW VOLTAGE WIRING BY DIVISION 28.

HW-8A

Emergency Exit
Each [DE, DPS] Door to Have: (HMD x HMF) NR

3	Hinges	TA386	630	MCK
1	Transfer Hinge	TA386-CC8	630	MCK
1	Delayed Egress Panic	CX98XP-EO	630	VON
1	Cylinder (for Re-set)	MORTISE I/C-X	626	SCH
1	Permanent Core	20-740XP	626	SCH
1	Closer	4041XP-EDA	689	LCN
1	Floor Stop	1200CK x 1268CK	626	TRM
1	Threshold	*2727A x MITRED ENDS	AL	PEM
1	Door Sweep	210AV	AL	PEM
1	Set Seals	~~2891AS~~ 2891_S CSK SCREWS	~~AL~~TBD	PEM
~~1~~	~~Drip~~	~~346C 4" GDW~~	~~AL~~	~~PEM~~
1	Door Position Switch	1076D	TBD	GES
1	Power Supply	PS904-FA	---	VON

* REVISE TO WELDED & DRILLED THRESHOLD ASSEMBLY TO MATCH DETAIL 8/A9.41 AS REQUIRED.

120VAC POWER, WIRING, AND CONDUIT BY DIVISION 26.
LOW VOLTAGE WIRING AND FIRE ALARM CONNECTION BY DIVISION 28.
3" DIAMETER CORE DRILL BY DIVISION 3 REQUIRED FOR FLOOR STOP ANCHOR; ANCHOR MUST BE SET COMPLETELY FLUSH IN CONCRETE.
INSTALL RIM STRIKE AND CLOSER ON SEALS; DO NOT CUT SEALS; ADJUST PANIC BACKSET ¼" FOR STRIKE MOUNTED ON SEALS.

HW-8B

Community Room
Each [CR, REX, DPS] Door to Have: (AL/GLD x ALF) NR

1	Floor Closer	SC-PH27-S-LFP (x SP/LO 1101 AS REQ'D)	626	RIX
2	Intermediate Pivots	M19	626	RIX
1	Full-Height Pull	RM3301 x 6HD MOUNTING	630	ROC
1	N.S. Panic Device	55NL-OP x RCB	630	VON
1	Cylinder	RIM I/C-X	626	SCH
1	Permanent Core	20-740XP	626	SCH
1	Electric Strike	310-4-LBM NFS	630	FAC
1	Threshold Assembly	13 x PER DETAILS (MINIMUM 8")	AL	PEM
1	Door Sweep	29324_SB	CUST	PEM
1	Alarm Contact	1076D	TBD	GES

CONDUIT BY DIVISION 26.
CARD READER, LOW VOLTAGE POWER, REQUEST-TO-EXIT SENSOR, AND WIRING BY DIVISION 28.
FACTORY-ANODIZE DOOR SWEEP TO MATCH DOOR FINISH.
FRAME SEALS BY ALUMINUM STOREFRONT SECTION.
COORDINATE PULL BACKSET TO ALLOW EASY ACCESS TO OUTSIDE KEY CYLINDER; PROVIDE MID-POST IF RECOMMENDED BY PULL MANUFACTURER.

HW-8B.1

Staff Entrance
Each [D.E., CRx2, DPS] Door to Have: (AL/GLD x ALF) NR

1	Floor Closer	SC-PH27-S-LFP (x SP/LO 1101 AS REQ'D)	626	RIX
2	Intermediate Pivots	M19	626	RIX
1	Full-Height Pull	RM3301 x 6HD MOUNTING	630	ROC
1	N.S. Panic Device	55NL-OP x RCB	630	VON
1	Cylinder	RIM I/C-X	626	SCH
1	Permanent Core	20-740XP	626	SCH
1	Electric Strike	310-4-LBM NFS	630	FAC
1	Delayed Egress Mag Lock	1511S	628	SDC
1	Power Supply	602RF (FOR DELAYED EGRESS LOCK)	---	SDC
1	Lock Reset Keyswitch	708-6R	630	SDC
1	Cylinder (for Keyswitch)	MORTISE I/C-X	626	SCH
1	Permanent Core	20-740XP	626	SCH
1	Threshold Assembly	13 x PER DETAILS (MINIMUM 8")	AL	PEM
1	Door Sweep	29324_SB	CUST	PEM
1	Alarm Contact	1076D	TBD	GES

120VAC POWER AND CONDUIT BY DIVISION 26.
CARD READERS, LOW VOLTAGE POWER, FIRE ALARM CONNECTION, AND WIRING BY DIVISION 28.
FACTORY-ANODIZE DOOR SWEEP TO MATCH DOOR FINISH.
FRAME SEALS BY ALUMINUM STOREFRONT SECTION.
COORDINATE PULL BACKSET TO ALLOW EASY ACCESS TO OUTSIDE KEY CYLINDER; PROVIDE MID-POST IF RECOMMENDED BY PULL MANUFACTURER.

THEORY OF OPERATION: Door normally closed, locked against entrance, and delayed egress lock armed. Loss of power or activation of fire alarm system immediately unlocked delayed egress lock for immediate free egress. Attempted egress without using inside card reader initiates 15-second delayed egress. Use of outside card reader temporarily unlocks electric strike and magnetic lock for authorized entrance. Use of inside card reader temporarily unlocks magnetic lock for authorized egress. Security system can be set to leave door in unlocked state for free entrance or egress. Alarm contact monitors door position.

HW-8B.2

Community Room
Each [DPS] Door to Have: (AL/GLD x ALF)

			NR	
1	Floor Closer	SC-PH27-S-LFP (x SP/LO 1101 AS REQ'D)	626	RIX
2	Intermediate Pivots	M19	626	RIX
1	Full-Height Pull	RM3301 x 6HD MOUNTING	630	ROC
1	N.S. Panic Device	55NL-OP x RCB	630	VON
1	Cylinder	RIM I/C-X	626	SCH
1	Permanent Core	20-740XP	626	SCH
1	Threshold Assembly	13 x PER DETAILS (MINIMUM 8")	AL	PEM
1	Door Sweep	29324_SB	CUST	PEM
1	Alarm Contact	1076D	TBD	GES

CONDUIT BY DIVISION 26.
WIRING BY DIVISION 28.
FACTORY-ANODIZE DOOR SWEEP TO MATCH DOOR FINISH.
FRAME SEALS BY ALUMINUM STOREFRONT SECTION.
COORDINATE PULL BACKSET TO ALLOW EASY ACCESS TO OUTSIDE KEY CYLINDER; PROVIDE MID-POST IF RECOMMENDED BY PULL MANUFACTURER.

HW-9

Main Entry
Each [ADO, DPS] Pair to Have: (AL/GLD x ALF)

			NR	
~~2~~1	Pivot Set~~s~~	147 (LHR DOOR) x EXT. SPINDLE FOR WOM	626	RIX
1	Floor Closer	SC-PH27-N-DA-LFP (RHR DOOR) x EXT. SPINDLE FOR WOM	626	RIX
~~2~~3	Intermediate Pivots	M19 (1 @ LHR DOOR, 2 @ RHR DOOR)	626	RIX
~~2~~1	Transfer Pivot~~s~~	EM19 x 8 WIRES (LHR DOOR)	626	RIX
4	Full-Height Pulls	RM3301 x BTB MOUNTING x LEAVE BOTTOM 10" OF DOOR CLEAR	630	ROC
1	3-Point Lock	MS1850S (VERIFY BACKSET) x 4015 x 4085 x MS4043	628	ARC
2	Cylinders	MORTISE I/C-X	626	SCH
2	Permanent Cores	20-740XP	626	SCH
1	Overhead Stop	1ADJ-SERIES (RHR DOOR)	630	RIX
~~1~~	~~Threshold Assembly~~	~~13 x PER DETAILS~~	~~AL~~	~~PEM~~
2	Door Sweeps	29324_SB	CUST	PEM
2	Alarm Contacts	1076D	TBD	GES

120VAC POWER AND CONDUIT BY DIVISION 26.
AUTOMATIC DOOR OPERATORS AND CONTROLS BY SECTION 087113.
TRANSFER PIVOT~~S~~ USED FOR CONCEALED WIRING OF RE-ACTIVATION SENSOR~~S~~.
FACTORY-ANODIZE DOOR SWEEPS TO MATCH DOOR FINISH.
FRAME SEALS AND MEETING STILE ASTRAGALS BY ALUMINUM STOREFRONT SECTION.
COORDINATE PULL BACKSET TO ALLOW EASY ACCESS TO KEY CYLINDERS; PROVIDE MID-POST IF RECOMMENDED BY PULL MANUFACTURER.

END OF SECTION

SECTION 08 71 13

AUTOMATIC SWING DOOR OPERATORS

PART 1 - GENERAL

1.01 RELATED DOCUMENTS

A. Drawings and general provisions of the Contract, including General and Supplementary Conditions and Division 1 Specification Sections, apply to this Section.

1.02 SUMMARY

A. This Section includes the following types of automatic door operators:
   1. Exterior, automatic swing door operators, low energy, with concealed mounting.
   2. Automatic door operators shall be configured for doors as follows:
      a. ~~Simultaneous p~~Pairs, out swing, ~~in swing, or double egress~~with only one leaf (LHR) automatic.
      ~~b. Coordinated unequal leaf rated pairs, out swing or in swing.~~
      ~~c.~~b. ~~Single doors, out swing or in swing.~~

B. Related Sections:
   1. Division 8 Section “Doors and Frames” for entrances furnished separately in Division 8 Section.
   2. Division 8 Section "Aluminum-Framed Entrances and Storefronts" for entrances furnished separately in Division 8 Section.
   3. Division 8 Section "Door Hardware" for hardware to the extent not specified in this Section.
   4. Division 26 Sections for electrical connections including conduit and wiring for automatic door operators.

1.03 REFERENCES

General: Standards listed by reference, including revisions by issuing authority, form a part of this specification section to extent indicated. Standards listed are identified by issuing authority, authority abbreviation, designation number, title or other designation established by issuing authority. Standards subsequently referenced herein are referred to by issuing authority abbreviation and standard designation.

A. Underwriters Laboratories (UL):
   1. UL 325 – Standard for Door, Drapery, Gate, Louver, and Window Operators and Systems.

B. American National Standards Institute (ANSI)/Builders’ Hardware Manufacturers Association (BHMA):
   1. ANSI/BHMA A156.19: Standard for Power Assist and Low Energy Power Operated Doors.

C. American Society for Testing and Materials (ASTM):
   1. ASTM B221 - Standard Specification for Aluminum and Aluminum-Alloy Extruded Bars, Rods, Wire, Profiles, and Tubes.

2. ASTM B209 - Standard Specification for Aluminum and Aluminum-Alloy Sheet and Plate

D. American Association of Automatic Door Manufacturers (AAADM):

E. National Fire Protection Association (NFPA):
1. NFPA 101 – Life Safety Code.
2. NFPA 70 – National Electric Code.

F. International Conference of Building Officials (ICBO):
1. UBC 1997: Uniform Building Code

G. California Department of Forestry and Fire Protection, Office of the State Fire Marshall.

H. International Standards Organization (ISO):
1. ISO 9001 - Standard for Manufacturing Quality Management Systems

I. National Association of Architectural Metal Manufacturers (NAAMM):
1. Metal Finishes Manual for Architectural and Metal Products.

J. American Architectural Manufacturers Association (AAMA):
1. AAMA 607.1 - Clear Anodic Finishes for Architectural Aluminum.
2. AAMA 611 Voluntary Specification for Anodized Architectural Aluminum.

1.04 DEFINITIONS

A. Activation Device: Device that, when actuated, sends an electrical signal to the door operator to open the door.

1.05 PERFORMANCE REQUIREMENTS

A. Provide automatic door operators capable of withstanding structural loads and thermal movements based on testing manufacturer's standard units in assemblies similar to those indicated for this Project.

B. Operating Range: Minus 30 deg F (29 deg C) to 130 deg F (54 deg C).

C. Opening-Force Requirements for Egress Doors: In the event power failure to the operator, swinging automatic entrance doors shall open with a manual force, not to exceed 30 lbf (133 N) applied at 1” (25 mm) form the latch edge of the door.

D. Door Energy: The kinetic energy of a door in motion shall not exceed 1.25 lbs-ft (1.69 Nm).

E. Closing Time:
1. Doors shall be field adjusted to close from 90 degrees to 10 degrees in 3 seconds or longer.
2. Doors shall be field adjusted to close from 10 degrees to fully closed in not less than 1.5 seconds.

1.06 SUBMITTALS

A. Submit listed submittals in accordance with Conditions of the Contract and Division 01 submittal procedures.

B. Shop Drawings: Include plans, elevations, sections, details, hardware mounting heights, and attachments to other work. Indicate wiring for electrical supply.

C. Color Samples for selection of factory-applied color finishes.

D. Closeout Submittals: Provide the following with project close-out documents.
1. Owner's Manual.
2. Warranties.

1.07 QUALITY ASSURANCE

A. Installer Qualifications: Manufacturer's authorized representative who is trained for installation and maintenance of units required for this Project.

Authorized Dealers	
Brand	Dealer
Besam	Besam - Southern California Contact: Erik Huber 529 South State College Blvd. Fullerton, CA 92831 Phone: (714) 446-0358 Fax: (800) 285-8825
Horton Automatics	Capitol Door Service Contact: Doug Cutts 8733 Monroe Court Rancho Cucamonga, CA 91730 (888) 637-3667 FAX: (888) 637-1167
Record / KM Systems	Pasco Doors ATTN: Don Caffrey 949 N. Cataract Avenue, Suite M San Dimas, CA 91773 (949) 394-7311 FAX: (949) 599-1941
Stanley	Stanley Access Technologies Contact: Mike Swinnerton 14178 Albers Way Chino CA 91710 (909) 664-0157 FAX: (909) 364-9860

B. Manufacturer Qualifications: A qualified manufacturer with a manufacturing facility certified under ISO 9001 and with company certificate issued by AAADM.

C. Certifications: Automatic door operators shall be certified by the manufacturer to meet performance design criteria in accordance with the following standards:
1. ANSI A156.19.
2. NFPA 101.
3. UL 325 Listed (Fire Door Operator)

4. ICBO (UBC Standard 10-1).
5. California State Fire Marshall (CSFM) Listed.

D. Source Limitations: Obtain automatic door operators through one source from a single manufacturer.

E. Product Options: Drawings indicate sizes, profiles, and dimensional requirements of automatic door assemblies and are based on the specific system indicated. Refer to Division 1 Section "Product Requirements."

F. Power Operated Door Standard: ANSI/BHMA A156.19.

G. Electrical Components, Devices, and Accessories: Listed and labeled as defined in NFPA 70, Article 100, by a testing agency acceptable to authorities having jurisdiction, and marked for intended use.

H. Emergency-Exit Door Requirements: Comply with requirements of authorities having jurisdiction for swinging automatic entrance doors serving as a required means of egress.

1.08 PROJECT CONDITIONS

A. Field Measurements: General Contractor shall verify openings to receive automatic door operators by field measurements before fabrication and indicate measurements on Shop Drawings.

B. Mounting Surfaces: General Contractor shall verify all surfaces to be plumb, straight and secure; substrates to be of proper dimension and material.

C. Other trades: General Contractor Advise of any inadequate conditions or equipment.

1.09 COORDINATION

A. Templates: Check Shop Drawings of other work to confirm that adequate provisions are made for locating and installing automatic door operators to comply with indicated requirements.

~~A.~~B. Coordinate frame header stop to ensure closer arm and track are completely concealed when door is closed.

~~B.~~C. Electrical System Roughing-in: Coordinate layout and installation of automatic door operators with connections to, power supplies, and remote activation devices.

~~C.~~D. System Integration: Integrate automatic door operators with other systems as required for a complete working installation.
1. Provide electrical interface control capability for card reader or keypad operation of automatic door operators on doors with electric locking.
2. Where required for proper operation, provide a time delay relay to signal automatic door operator to activate only after electric lock system is released.

1.10 WARRANTY

A. Automatic door operators shall be free of defects in material and workmanship for a period of two (2) years from the date of substantial completion.

B. During the warranty period the Owner shall engage a factory-trained technician to perform service and affect repairs. A safety inspection shall be performed after each adjustment or repair and a completed inspection form shall be submitted to the Owner.

C. During the warranty period all warranty work, including but not limited to emergency service, shall be performed during normal working hours.

PART 2 - PRODUCTS

2.01 AUTOMATIC DOOR OPERATORS

A. Manufacturers: Overhead Concealed: Record 8700-Series (basis of design), Besam SwingMaster, Horton 4100LE-Series, ~~Record 8700-Series,~~ Stanley MagicForce, (only KM 2200-Series at door weighing 350 lbs. or more.).

2.02 MATERIALS

A. Aluminum: Alloy and temper recommended by manufacturer for type of use and finish indicated.
   1. Headers: 6063-T6.
   2. Extruded Bars, Rods, Profiles, and Tubes: ASTM B 221.
   3. Sheet and Plate: ASTM B 209.

B. Sealants and Joint Fillers: Refer to Division 7 Section "Interior Joint Sealants".

2.03 COMPONENTS

A. Header Case at Operators Concealed at Aluminum Storefront: Header case shall not exceed 6" (152 mm) square in section and shall be fabricated from extruded aluminum with structurally integrated end caps, designed to conceal door operators and controls. The operator shall be sealed against dust, dirt, and corrosion within the header case. Access to the operator and electronic control box shall be provided by a full-length removable cover~~, edge rabbetted to the header to ensure a flush fit~~, removable from the underside of the header. Removable cover shall be secured to prevent unauthorized access.

B. Door Arms: A combination of door arms and linkage shall provide positive control of door through entire swing; units shall permit use of butt hung, center pivot, and offset pivot-hung doors. Provide concealed arm assembly where door cut-out is not exposed from interior or exterior side when door is closed, similar to Record 8700-Series. Coordinate frame stop size at header to ensure door arm is concealed.

C. Fasteners and Accessories: Manufacturer's standard corrosion-resistant, non-staining, non-bleeding fasteners and accessories compatible with adjacent materials.

D. Signage: Provide signage in accordance with ANSI/BHMA A156.19.

2.04 SWINGING DOOR OPERATORS

A. Provide door operators of size recommended by manufacturer for door size, weight, and movement; for condition of exposure; and for long-term, maintenance-free operation under normal traffic load for type of occupancy indicated.

B. At doors weighing more than 350 lbs., provide only the KM Systems 2200-Series electro-hydraulic power operators.

C. Electromechanical or Electrohydraulic Operators: Self-contained unit.
   1. Operator Type: Low energy; readily convertible to full energy; no tools required to change type.
   2. Mounting: Visible
   3. Features:
      a. Adjustable opening and closing speeds.
      b. Adjustable opening and closing force.
      c. Adjustable back-check.
      d. Adjustable hold-open time between 0 and 30 seconds.
      e. Reverse on obstruction.
      f. Variable rate open/closed speed control.
      g. Closed loop speed control with active braking and acceleration.
      h. Variable obstruction recycle time delay.
      i. Optional Switch to open/Switch to close operation.
      j. When operators are provided in pairs, adjustable features are independently adjustable for each operator.

D. Quiet Performance: The operator shall be designed to output audible noise ratios less than or equal to 50dba.

E. Manual Use: The operator shall function as a manual door closer in the direction of swing with or without electrical power. The operator shall deliver an even, consistent open force across the entire transition from door fully closed to door fully open.

F. Electrical service to door operators shall be provided under Division 16 Electrical. Minimum service to be 120 VAC, 30 amps for doors with operators in pairs, 15 amps for single doors.

2.05 ELECTRICAL CONTROLS

A. Safety Search Circuitry: Provide system to recycle the swinging panels when an obstruction is encountered during the closing cycle. If an obstruction is detected, the system shall search for that object on the next closing cycle by reducing door closing speed prior to the previously encountered obstruction location, and will continue to close in check speed until doors are fully closed, at which time the doors will reset to normal speed. If obstruction is encountered again, the door will come to a full stop. The doors shall remain stopped until obstruction is removed and operate signal is given, resetting the door to normal operation.

B. Control Switch: Automatic door operators shall be equipped with a three position function switch to control the operation of the door. Control switch shall provide three modes of operation, Automatic, Off, and Hold-Open. Provide key switch (Camden CM170/3) on frame face, 44-inches above the finished floor.

C. Safety Sensing: Provide BEA SuperScan II at each door equipped with an automatic door operator to sense when a person is in the doorway and signal the automatic door operator to re-activate until the doorway is clear. Concealed wiring through concealed power transfer (by Section 08 71 00) from door to frame. Provide BEA Bodyguard III (with Bodymount as required to achieve safety sensing) at each automatic operated door to sense when a person is in the path of door swing and prevent the automatic door operator from opening until the door swing path is clear.

D. Fire Alarm Connection: At fire-rated doors, upon activation of the fire alarm, the automatic door operators' power-open and hold-open functions shall be disabled and the operator shall function as a normal door closer.

E. Provide independent control of doors at pairs with coordinators for coordinated opening.

F. Time Delay Relays: At fire-rated doors with electric strikes or electric panic hardware, provide time delay relay (ESI 530) to allow door to electrically unlatch prior to opening. Also, provide for coordinated opening and closing of leaves at pairs with flush bolts.

G. Provide regulated, filtered low voltage power supply with fire alarm relay (SDC 602RF or equal) for electric strikes, where they occur, at automatic pairs. Coordinate with Section 08 71 00 to avoid redundant provision of this power supply.

2.06 ACTIVATION DEVICES

A. Activation for Low Energy Doors:
1. Push Plates: Provide ~~Wikk Ingress'r~~two MS Sedco 59-HSS (or equal by Wikk) stainless steel push plate switches at each side of the opening.
   a. Interior and exterior push plates shall be wall mounted and hardwired to door operator controls.
   b. Provide push plate switches of quantity and location per floor plans and elevations.

2.07 ALUMINUM FINISHES

A. Comply with NAAMM Metal Finishes Manual for Architectural and Metal Products for recommendations for applying and designing finishes. Finish designations prefixed by AA comply with system established by Aluminum Association for designing finishes.

B. Class II, Clear Anodic Finish: AA-M10C22A31 Mechanical Finish: as fabricated; Chemical Finish: etched, medium matte; Anodic Coating: Architectural Class II, clear coating 0.40 mils minimum complying with AAMA 611-98, and the following:
1. AAMA 607.1
2. Applicator must be fully compliant with all applicable environmental regulations and permits, including wastewater and heavy metal discharge.

PART 3 - EXECUTION

3.01 INSPECTION

Examine conditions, with Installer present, for compliance with requirements for installation tolerances, header support, and other conditions affecting performance of swinging

automatic entrance doors. Proceed with installation only after unsatisfactory conditions have been corrected.

3.02 INSTALLATION

A. Do not install damaged components. Fit joints to produce hairline joints free of burrs and distortion. Rigidly secure non-movement joints.

B. Mounting: Install automatic door operators/headers plumb and true in alignment with established lines and grades. Anchor securely in place.
   1. Install surface-mounted hardware using concealed fasteners to greatest extent possible.
   2. Set headers, arms and linkages level and true to location with anchorage for permanent support.

C. Door Operators: Connect door operators to electrical power distribution system as specified in Division 26 Sections.

D. Sealants: Comply with requirements specified in Division 7 Section "Joint Sealants" to provide weather tight installation.

3.03 FIELD QUALITY CONTROL
Testing Services: Factory Trained Installer shall test and inspect each swinging automatic entrance door to determine compliance of installed systems with applicable ANSI standards.

3.04 ADJUSTING
Adjust door operators, controls, and hardware for smooth and safe operation, for weather-tight closure, and complying with requirements in ANSI/BHMA A156.19 by AAADM Certified Technician.

3.05 CLEANING AND PROTECTION
Clean surfaces promptly after installation. Remove excess sealant compounds, dirt, and other substances. Repair damaged finish to match original finish.

END OF SECTION

SECTION 08 80 00 - GLAZING

PART 1 - GENERAL

1.1 SUMMARY

A. Section includes:

1. Glazing for the Project except as noted below.
2. Unframed mirrors.
3. Glazing accessories.
4. Glazing sealants.
5. Interior window film.

B. Related requirements:

1. Division 01 for LEED requirements.
2. Division 07 for sealants other than required for the work of this Section.
3. Division 08 for glazing of tubular skylights, and for exterior and interior glass assembly framing.
4. Division 10 for framed mirrors and for glazing in fire extinguisher cabinets.

1.2 SUSTAINABLE DESIGN REFERENCE

A. USG Green Building Council (USGBC).

1.3 ADMINISTRATIVE REQUIREMENTS

A. Pre-installation meeting:

1. Prior to start of installation, arrange a pre-installation meeting between the glass and framing system manufacturers authorized representatives, the Contractor, the glazier, and the Design Consultant to review the Drawings and Specifications, the glass and sealants manufacturers' data, and conditions of framing to be glazed, as well as other conditions that would affect the quality of this work.
2. If more than one trade will be responsible for the successful performance of the work of this Section, these trades shall attend the meeting.
3. Review all typical and atypical details to verify the method(s) of installation that the Contractor intends to follow, as well as corrective actions that are required.
4. Special conditions not specifically referenced or addressed by the Project Drawings, manufacturer's typical details, or the Shop Drawings, shall also be identified, reviewed and discussed.
5. Take photographs and notes of unresolved conditions, if any, along with sketches of the same unresolved conditions to determine what actions need to be taken to assure an installation that will meet the requirements of the Contract Documents, and will be acceptable to the assembly/material manufacturer to issue the warranties specified.
6. Record meeting minutes and distribute electronic copy to attendees and others concerned, within 7 days after the meeting.

1.4 SUBMITTALS

A. Data: Manufacturer Product Data for glass, sealants, gaskets and glazing accessories.
B. Samples:

1. Twenty-four-inch square labeled samples of each type of glass, with taped or ground edges.

2. Coated glass samples shall show extremes of color range.
3. Glass indicated or required to be “heat-treated” need not be when submitting samples.

C. Certification: Glass manufacturer’s certification as specified.

1. Product certificates signed by glazing materials manufacturers certifying that their products comply with specified requirements. Include wind pressure analysis, thermal stress analysis, including shading effects, and review of shop drawings stating that details are suitable for proposed glass products.
2. Separate certifications are not required for glazing materials bearing the manufacturer's permanent label designating type and thickness of glass, provided labels represent a quality control program of a recognized certification agency or independent testing agency acceptable to authorities having jurisdiction.

D. Glazing schedule: Use same designations indicated on Drawings for glazed openings in preparing a schedule listing glass type and thickness for each size opening and location.

E. Preconstruction adhesion and compatibility test report: From glazing sealant manufacturer indicating glazing sealants were tested for adhesion to glass and glazing channel substrates and for compatibility with glass and other glazing materials.

F. Product test reports: From a qualified testing agency indicating the following products comply with requirements, based on comprehensive testing of current products:

1. Coated float glass.
2. Insulating glass.
3. Glazing sealants.
4. Glazing gaskets.

G. Labels: When required by Authorities Having Jurisdiction, provide NFRC Rating Labels as required by 2005 California Energy Code. Reference 2005 compliance guide for information required.

H. LEED: LEED certification product data as specified in Section 01 81 13, “Sustainable Design Requirements”, for the following LEED credits:

1. Credit MR 4.1 & 4.2, Recycled Content.
2. Credit MR 5.1, Regional Materials, Manufactured Locally.
3. Credit MR 5.2, Regional Materials, Harvested / Extracted Locally.
4. Credit MR 6, Rapidly Renewable Materials.
5. Credit EQ 4.1, Low Emitting Materials, Adhesives & Sealants.

1.5 QUALITY ASSURANCE

A. Glazier qualifications: Experienced installer who has completed glazing similar in material, design, and extent to that indicated for this Project; whose work has resulted in glass installations with a record of successful in-service performance; and who employs glass installers for this Project who are certified under the National Glass Association Glazier Certification Program as Level 2 (Senior Glaziers) or Level 3 (Master Glaziers).

B. Fabricator qualifications: When the glass manufacturer has a certification program, the fabricator shall have a current “Certified Fabricator” certificate form the glass manufacturer.

C. Source limitations for clear glass: Obtain clear float glass from one primary glass manufacturer.

D. Source limitations for coated glass: Obtain coated glass from one manufacturer for each type of coating and each type and class of float glass indicated.

E. Source limitations for insulating glass: Obtain insulating-glass units from one manufacturer using the same type of glass and other components for each type of unit indicated.

F. Source limitations for laminated glass: Obtain laminated-glass units from one manufacturer using the same type of glass lites and interlayers for each type of unit indicated.

G. Source limitations for glazing accessories: Obtain glazing accessories from one source for each product and installation method indicated.
H. Fire-rated door assemblies: Assemblies complying with NFPA 80 that are listed and labeled by a testing and inspecting agency acceptable to authorities having jurisdiction, for fire ratings indicated, based on testing according to NFPA 252.
I. Fire-protection-rated glazing labeling: Permanently mark fire-protection-rated glazing with certification label of a testing agency acceptable to authorities having jurisdiction. Label shall indicate manufacturer's name, test standard, whether glazing is for use in fire doors or other openings, whether or not glazing passes hose-stream test, whether or not glazing has a temperature rise rating of 450 deg F, and the fire-resistance rating in minutes.
J. Safety glass: Category II materials complying with testing requirements in 16 CFR 1201 and ANSI Z97.1.

1. Subject to compliance with the above, provide a permanent mark on safety glass with certification label of Safety Glazing Certification Council or another certification agency acceptable to authorities having jurisdiction.

K. Insulating glass certification program: Permanently marked either on spacers or on at least one component lite of units with appropriate certification label of the following inspecting and testing agency.

1. Insulating Glass Certification Council.
2. Associated Laboratories, Inc.
3. National Accreditation and Management Institute.

L. Manufacturer certification: Submit manufacturer certification that.

1. All materials to be used in the glazing system such as sealants, setting blocks, spacers, backing rods, metal finishes, etc. have been reviewed by the glass manufacturer.
2. These materials are compatible with the glass supplied to the Project site.
3. These materials will not cause deterioration, premature aging, and staining of adjacent materials.

M. Labeling:

1. Submit a certificate stating that the glass furnished for the Project complies with the Specifications.
2. Label each piece of heat-treated glass with a permanent logo etched in one corner to identify the fabricator.

1.6 HANDLING

A. Storage: Prevent damage to glass and glazing materials from condensation, temperature changes, direct exposure to sun, run-off, and other causes.

1.7 PROJECT CONDITIONS

A. Do not proceed with installation of bulk sealants under adverse weather conditions, or when temperatures are below or above manufacturer's recommended limitations for installation.

1.8 SPECIAL WARRANTIES

A. Refer to Section 08 43 13, 08 55 13 and 08 50 00 for glass in exterior assemblies.
B. Warrant laminated glass for 5 years after Substantial Completion against delamination, deterioration of plastic sheet or laminating film, loss of transparency, color change or other forms of deterioration due to defective materials or lamination.
C. Warrant insulating glass for 5 years after Substantial Completion against fogging and loss

D. of transparency due to defective materials or sealant failure.

E. Glass shall not experience spontaneous breakage.

1. This Specification defines nickel sulfide stones as a glass material defect.
2. Installed tempered glass which breaks due to nickel sulfide stones shall be included in the warranty.

F. Replace defective materials and workmanship during the warranty period at no cost to the City.

PART 2 - PRODUCTS

2.1 PRIMARY GLASS MANUFACTURERS

A. AGC Flat Glass North America Ltd.
B. LOF Inc.
C. Guardian Glass.
D. PPG Industries.
E. American St Gobain.
F. Or equal.

2.2 CRITERIA AND PERFORMANCE REQUIREMENTS

A. General: Installed glazing systems shall withstand normal thermal movement, live loads for the skylight, and wind and impact loads (where applicable) without failure, including loss or glass breakage attributable to the following: defective manufacture, fabrication, or installation; failure of sealants or gaskets to remain watertight and airtight; deterioration of glazing materials; or other defects in construction.

B. Glass design: Glass thicknesses shown and heat treatment specified are minimum requirements based upon manufacturer's regularly published literature. The Design Consultant makes no representations as to the accuracy of the literature or the conclusions derived therefrom. Confirm glass thicknesses by analyzing Project loads and in-service conditions. Provide glass lites for various size openings in nominal thicknesses indicated, but not less than thickness and in strengths (annealed or heat-treated) required to meet or exceed the criteria specified below, and ASTM E 1300.

C. Delegated design: Design glass, including comprehensive engineering analysis according to the CBC, by a qualified California-licensed professional engineer, using the following design criteria.

1. Design wind pressures:

   a. Positive: As indicated on Drawings, but not less than 20 psf.
   b. Negative: 20 psf, unless otherwise indicated.

2. Live load: 250 lbs. concentrated.
3. Vertical glazing: For glass surfaces sloped 15 degrees or less from vertical, design glass to resist design wind pressure based on glass type factors for short-duration load. Design glass for a probability of breakage not greater than 0.008.
4. Skylight glazing: For glass surfaces sloped more than 15 degrees from vertical, design glass to resist each of the following combinations of loads.

   a. Outward design wind pressure minus the weight of the glass. Base design on glass type factors for short-duration load.
   b. Live concentrated load of 250 lbs.

5. Probability of breakage for skylight glazing: For glass surfaces sloped more than 15 degrees from vertical, design glass for a probability of breakage not greater than 0.001.
6. Maximum lateral deflection: For glass supported on all 4 edges, limit center-of-glass deflection at design wind pressure to not more than 1/50 times the short-side length or one-inch, whichever is less.
7. Differential shading: Design glass to resist thermal stresses induced by differential shading within individual glass lites.

D. Thermal movements: Allow for thermal movements from ambient and surface temperature changes acting on glass framing members and glazing components specified in exterior glazed assemblies.

2.3 GLASS MATERIALS

A. General:

1. Float glass shall comply with ASTM C 1036; heat-treated glass shall comply with ASTM A 1048.
2. ASTM C 1172 Standard Specification for Laminated Architectural Flat Glass.
3. ASTM C 1376 Standard Specification for Pyrolytic and Vacuum Deposition Coatings on Flat Glass
4. ASTM C 1503 Standard Specification for Silvered Flat Glass Mirror.
5. ASTM E 2190 Standard Specification for Insulating Glass Unit Performance and Evaluation.
6. ANSI Z97.1 American National Standard for Safety Glazing Materials Used in Buildings - Safety Performance Specifications Method of Test.
7. US Consumer Product Safety Commission CPSC 16 CFR 1201 Safety Standard for Architectural Glazing Materials:
8. Provide glass free from bubbles, smoke vanes, air holes, scratches and other defects.
9. Laminated glass shall comply with ASTM C 1172. Glass in the lamination shall be from the same manufacturer when heat-strengthened.
10. Fabricate tempered glass by horizontal (roller hearth) process with roll wave distortion parallel to bottom edge of glass as installed, unless otherwise indicated.
11. Comply with Code and the Drawings for glass in hazardous locations. Laminated glass subject to human impact shall comply with CPSC 16 CFR Part 1201.
12. Unless otherwise indicated or specified, overall thickness of each glass type and composite thickness of multiple layer glass types shall be consistent throughout the Project.
13. Provide insulating glass assemblies CBA rated by IGCC when tested in compliance with ASTM E 774, and permanently labeled with the appropriate certification label of IGCC, ALI or NCTL.

B. Glass types: Refer to the schedule at the end of this Section.

2.4 GLAZING MATERIALS

A. Laminating glass interlayer: One of the following.

1. Clear, with a proven record not to bubble, discolor, or loose physical and mechanical properties after laminating glass lites and during service life. For glass-to-glass, use 0.03-inch thick, clear, Polyvinyl butyral; “Saflex” by Monsanto Co., “Butacite” by EI du Pont de Nemours & Co., Inc., or equal.

2. Clear “SentryGlas” by DuPont, or equal..
3. Interlayer:
    a. Thickness: 0.060 inch.
    b. Young’s Modulus: 43 kpsi, ASTM D 5026.
    c. Tensile strength: 5.0 kpsi, ASTM D 638.
    d. Elongation: 400 percent, ASTM D 638.
    e. Flex modulus: 50 kpsi, ASTM D 790.
    f. Heat deflection temperature at 0.46 MPa: 110 degrees F., ASTM D 648.

B. Setting block: Neoprene or, in the case of structural silicone glazing dense extruded silicone; both with a hardness of 80 to 90 durometer Shore A with a minimum length of 4-inch or as required by GANA guidelines.
C. Side blocks: Neoprene or dense silicone with a harness of 65 ±5 durometer Shore A.
D. Spacer: Neoprene, silicone, or EPDM, 50 to 60 durometer hardness, compatible with sealants used.
E. Sealants:
1. For primary seal of insulating units: Manufacturer standard sealant.
2. For structural glazing specified in Section 08 43 13: High modulus (structural) silicone sealant, 2-component, non-acidic, neutral curing silicone which meets or exceeds Federal Specification TT-S-00227, Type II, Class B and ASTM C 920, Type M, NS, Class 12.5.
    a. Color: Black or clear, as selected by the Design Consultant.
    b. Acceptable products:
        1) Dow Corning “995” or “DC 995.” DC 983 is not acceptable for use with painted substrate without incorporation of special substrate preparation requirements utilizing Scotch Brite pads, alcohol and barrier primer.
        2) General Electric “Ultra Glaze SSG 4400” and “Ultra Glaze 4000.”
        3) Tremco “Proglaze SSG.”
        4) Pecora “895” or 2-part “Fast Cure.”
        5) Or equal.
    c. Painted surfaces in contact with structural silicone must be coated with a primer approved for use by the sealant manufacturer.
3. For all other conditions: Medium and low modulus (weatherseal) silicone sealant, one-part, non acidic, neutral curing, Type S, Grade NS, Class 25, Use NT, capable of withstanding movements from plus 50 to minus 50 for medium modulus and plus 100 to minus 50 percent for low modulus based on original joint design.
    a. Color: Match Design Consultant’s paint color for sealant.
    b. Acceptable products:
        1) Dow Corning “795” and “790.”
        2) General Electric “Silpruf,” “Silpruf LM.”
        3) Or equal.
    c. Only low modulus sealant, such as Dow “790,” GE “Silpruf LM,” or equal, when sealing to cementitious substrate.

F. Glazing gasket: Resilient, continuous neoprene, (except as specified below) extrusions, 40 to 60 Shore A durometer hardness, meeting the requirements of ASTM C 509 for cellular (closed-cell) material, and AAMA SG-1 for non-cellular (dense) material.

1. Gaskets shall have a continuous mechanical engagement to framing members and factory molded corners.
2. Gasket corners, whether molded or not, shall be bedded in elastomeric sealant compatible with glazing gaskets.
3. When in direct contact with silicone sealants, gaskets, spacers and setting blocks shall be heat cured silicone rubber based material chemically compatible with the silicone sealant and with sufficient hardness for the specific purpose intended. Compatibility testing by the silicone sealant supplier/manufacturer shall be required.
4. Design interior and exterior gasket profiles to produce a glass edge pressure of 12 psf unless otherwise recommended by the glass manufacturer.

G. Compressible filler rod:

1. Closed-cell or waterproof jacketed rod stock of synthetic rubber or plastic foam compatible with sealants used, flexible and resilient, with 5 to 10 psi compressive strength at 25 percent deflection.
2. Do not use vinyl foam stock.

H. Mirror adhesive: Mirror Mastic by Palmer, Ultra/Bond by C. Gunther Co. or 7HR4 Mirror Tac by Pecora Corp., or equal. Use Super Set Mirro-Mastic, or equal on plywood, particleboard, gypsum board and hardboard; use Qwikset, or equal for copper-backed mirrors, for mirror-to-mirror and mirror to non-porous backing.

I. Mirror backing and cut edge sealer: Primary Mirror Backing by Sommer & Maca, Mirro-Bac by Palmer or Seal-Kwik by C. Gunther Co., or equal.

J. Mirror moldings: Clear, anodized aluminum "J" moldings, D636BA, clear, anodized aluminum “J” molding by CR Lawrence Co., (basis of design), or equal by JW Goss Co., A. Geo Diack, or Arch Aluminum and Glass Company, Inc.

2.5 INTERIOR WINDOW FILM

A. Manufacturer and materials: As indicated on the Drawings.

2.6 FABRICATION

A. Cutting:

1. Obtain sizes from Shop Drawings or by field measurement. Cut glass to fit each opening with at least the minimum edge clearance and bite on glass recommended by glass manufacturer.
2. When glass will be precut to sizes obtained from Shop Drawings, take field measurements of each opening before glazing to verify adequate bite on glass and minimum edge clearance.
3. Glaze openings, which do not fall within tolerances for which precut glass has been sized only with glass specially cut to fit such openings.
4. Do not nip glass edges. Edges may be wheel cut or sawed and seamed at manufacturer's option.

B. Edge quality:

1. Do not cut, seam, nip, or abrade tempered and heat strengthened glass after tempering.
2. Provide flat ground edges with arised corners where glass edge is not covered by a metal stop.

C. Laminated glass:

1. Factory-laminate using manufacturer standard heat-plus-pressure process.

2. Exercise caution to exclude dirt and other foreign materials from lamination and to eliminate all voids.
3. Arrange each layer of laminate in the order indicated, and label exterior (or interior) face of each completed unit so that there will be no error in the placement during installation.
4. Conceal processed and coated glass in the lamination.
5. Factory-cut units to proper size; do no cutting at Project site.

D. Glass in sloped glazing conditions (15 degrees or more from vertical) shall be laminated with both lites heat-strengthened. Fully tempered glass is not allowed, whether monolithic, laminated, or as the inboard lite of an insulated glass unit.

E. Insulating glass:

1. Provide black aluminum spacers with bent (not mitered or spliced) corners; only one seam is allowed in each spacer of each unit.
2. The date of the manufacture of the unit shall be discretely identified on the spacer (top of unit, left or right corner).

F. Identification: Identify tempered glass with a manufacturer-installed, removable paper designation as required by CBC section 2406.

PART 3 - EXECUTION

3.1 EXAMINATION

A. Examine conditions and measurements affecting the work of this Section at site.
B. Verify that openings and frames to be glazed are within allowable tolerances, plumb, level and square.
C. Inspect framing joint intersections to insure that the offset in the joinery will not impose undue edge pressure on the glass in compliance with GANA, Glazing Manual, and Sealant Manual, guidelines.
D. Correct other detrimental conditions before proceeding with glazing.

3.2 STANDARDS AND PERFORMANCE

A. Watertight and airtight installation is required for each piece of glass installed in an exterior wall or skylight.
B. Each installation must withstand normal temperature changes, wind loading, and impact from normal operation for doors and windows, without failure of any kind including loss or breakage of glass, failure of sealants or gaskets to remain watertight and airtight, deterioration of glazing materials and other defects in the Work.
C. Installed glass shall be free from rattle.
D. Protect glass from damage at all times during handling, installation and operation of the building until Substantial Completion.
E. Comply with combined recommendations of glass manufacturer and manufacturer of sealants and other materials used in glazing, except where more stringent requirements are specified.
F. Except as recommended otherwise by the manufacturers of the glass and glazing materials, comply with GANA Glazing Manual and the following:

1. Provide minimum nominal glass bite of 0.375-inch on monolithic lites; 1/2-inch on insulated glass units.
2. Where joint movement will result in variable glass bite, increase nominal bit to provide 0.375-inch minimum bite and 0.25-inch minimum edge clearance.

G. Inspect each piece of glass immediately before installation, and eliminate those with edge damage or face imperfections.
H. Unify appearance of each series of lights by setting each piece to match others as nearly as possible. Inspect each piece and set with pattern, draw and bow oriented in the same direction as other pieces.

3.3 PREPARATION FOR GLAZING

A. Immediately before glazing, clean the glazing channel and other framing members to receive glass.

1. Remove coatings not firmly bonded to the substrate.
2. Verify that framing is satisfactory to receive the glass.

B. Apply primer or sealer to joint surfaces when recommended by sealant manufacturer.

3.4 GLASS INSTALLATION

A. Structural glazing: Comply with the sealant manufacturer's instructions and the following ASTM standards.

1. C 794: Sealant compatibility and adhesion to each substrate to be encountered on the Project.
2. C 1087: Sealant compatibility with backing.
3. C 1087: Sealant compatibility and lack of adhesion to bond breaker.
4. C 1184: Structural Glazing Specifications.
5. C 1401: Guide for Structural Glazing.

B. Erect each pane of glass square, plumb, and with uniform clearances between panel and rebates.
C. Follow glass manufacturer's instructions and GANA Standards. Provide minimum nominal glass bite of 0.375-inch on monolithic lites, and 1/2-inch on insulating glass units. Maintain minimum bed clearance between glass and frame.
D. Do not nip glass. Do not install glass with edge damage.
E. Install glass with required glass markings right side up so they can be read from the exterior.
F. Setting blocks:

1. Minimum length of 4 inches or as required by GANA guidelines; minimum width shall correspond to the glass thickness and retaining member but, in no case less than the glass thickness at point of contact.
2. Locate at quarter points, or in accordance with GANA glazing guidelines.
3. Secure against migration.
4. Shims used in conjunction with setting blocks must be of the same material, hardness, length and width as the setting blocks.

G. Side blocks:

1. Locate side blocks where required within the upper half of each jamb for each light.
2. Install block with 1/8-inch clearance between block and glass bearing surface.
3. Block shall be sufficient length to prevent point loading on the glass.
4. Side blocks are not required where an individual glass light is continuously sealed with silicone at 2 or more edges, when the sealant is installed immediately following the setting of the glass.

H. Provide spacers inside and out unless continuous gaskets are used. Use glass manufacturer recommended size and spacing.

I. Prevent exudation of sealant or compound by forming voids or installing filler rods in the channel at the heel of jambs and head (do not leave voids in the sill channels, except as needed for drainage and weep holes) depending on light size, thickness and type of glass, and complying with manufacturer's recommendations.
J. Sealant shall not be adhered to, or placed against, the edge of a laminated glass unit interlayer.
K. Force sealants into channel to eliminate voids and to assure complete "wetting" or bond of sealant to glass and channel surfaces.
L. Tool exposed surfaces of sealants to provide a substantial "wash away" from the glass.
M. Install pressurized gaskets to protrude slightly out of the channel, so as to eliminate dirt and moisture pockets.
N. Clean and trim excess glazing materials from the glass, stops and frames promptly after installation, and eliminate stains and discolorations.
O. Where wedge shaped gaskets are driven into one side of the channel to pressurize the sealant or gasket on the opposite side, provide adequate anchorage to ensure that gasket will not "walk" out when subjected to dynamic movement.

1. Anchor gasket to stop with matching ribs, or with adhesive.

P. Clean, prime and mask structural silicone joints the same day when silicone is applied.

3.5 MIRROR INSTALLATION

A. Apply one additional coat of mirror backing to the back of the mirror, allow to dry, then apply mirror mastic in compliance with the mastic manufacturer's instructions.
B. Fasten supporting angles securely to the studs; do not attach to gypsum board with toggle or Molly bolts.
C. Set mirrors in supporting angles and press against substrate to ensure bond with mastic.]
D. Leave open space of 1/8-inch or more between mirror and substrate. Do not seal ventilation space at edges of mirror.

3.6 INTERIOR WINDOW FILM INSTALLATION

A. Install in accordance with the film manufacturer's instructions.
B. Cut film edges neatly and square at a uniform distance of 1/8 inch to 1/16 inch of window sealant. Use new blade tips after 3 to 4 cuts.
C. Spray film manufacturer’s recommended slip solution on window glass and adhesive to facilitate proper positioning of film.
D. Apply film to glass and lightly spray film with slip solution.
E. Squeegee from top to bottom of window. Spray slip solution to film and squeegee a second time.
F. Bump film edge with lint-free towel wrapped around edge of a 5-way tool.
G. Upon completion of film application, allow 30 days for moisture from film installation to dry thoroughly, and to allow film to dry flat with no bubbles and moisture dimples when viewed under normal viewing conditions.

3.7 CURING/PROTECTING/CLEANING

A. Cure glazing sealants and compounds in compliance with their manufacturer's instructions and recommendations, to obtain high early bond strength, internal cohesive strength and surface durability.
B. Protect glass from breakage immediately upon installation. Do not apply markers of any type to glass.
C. Before Substantial Completion, remove and replace glass that is broken, chipped, cracked, abraded, stained or damaged in other way, including natural causes, accidents and vandalism.

D. Maintain glass in a clean condition during construction so that it will not be damaged by corrosive action and will not contribute (by wash-off) to the deterioration of glazing materials and other work.
E. Remove remaining labels and wash and polish glass on both faces not more than 4 days prior to City's acceptance of the work in each area. Comply with GANA 01-0300 and the glass manufacturer's recommendations.

3.8 GLASS SCHEDULE

A. PPG Industries Solarban 60, low E.
B. Remainder of glass types: TBD.

3.9 MIRRORS

A. 1/4-inch "Silvering Quality" float glass with silver coating, copper protective coating and 2 mil thick protective paint; complying with CS 27.
B. Grind and polish vertical edges (exposed); horizontal edges shall be clean cut.

END OF SECTION

SECTION 08 91 19 - EXTERIOR ALUMINUM WALL LOUVERS

PART 1 - GENERAL

1.1 SUMMARY

A. Section includes prefinished exterior aluminum wall louvers.
B. Related requirements:

1. Division 01 for LEED requirements.
2. Division 23 for interior louvers connected to ductwork.

1.2 SUSTAINABLE DESIGN REFERENCE

A. USG Green Building Council (USGBC).

1.3 ADMINISTRATIVE REQUIREMENTS

A. Deferred approval: The work of this Section requires deferred approval (delegated design), including comprehensive engineering analysis by a qualified professional engineer using performance requirements and design criteria indicated.

~~B.Pre-installation meeting:~~

~~1.Prior to start of installation, arrange a pre-installation meeting between the glass and framing system manufacturers authorized representatives, the Contractor, the installer, the glazier, and the Design Consultant to review the Drawings and Specifications, the glass and sealants manufacturers' data, and conditions of framing to be glazed, as well as other conditions that would affect the quality of this work.~~

~~2.If more than one trade will be responsible for the successful performance of the work of this Section, these trades shall attend the meeting.~~

~~3.Review all typical and atypical details to verify the method(s) of installation that the Contractor intends to follow, as well as corrective actions that are required.~~

~~4.Special conditions not specifically referenced or addressed by the Project Drawings, manufacturer's typical details, or the Shop Drawings, shall also be identified, reviewed and discussed.~~

~~5.Take photographs and notes of unresolved conditions, if any, along with sketches of the same unresolved conditions to determine what actions need to be taken to assure an installation that will meet the requirements of the Contract Documents, and will be acceptable to the assembly/material manufacturer to issue the warranties specified.~~

~~6.Record meeting minutes and distribute electronic copy to attendees and others concerned, within 7 days after the meeting.~~

1.4 SUBMITTALS

A. Data: Manufacturer Product Data and specifications, air performance and water penetration graphs (AMCA Certified Ratings), anchorage details and installation instructions, including specifications for finishing materials.
B. Shop Drawings:

1. Detail the fabrication and erection of louvers not shown in the manufacturer data.
2. Include details of sections and connections.
3. Show interface with adjacent materials, anchorage and accessories.

C. Samples: 6-inch long finished Samples of each profile of aluminum extrusions with the specified finish.

D. LEED: LEED certification product data as specified in Section 01 81 13, “Sustainable Design Requirements”, for the following LEED credits:

1. Credit MR 4.1 & 4.2, Recycled Content.
2. Credit MR 5.1, Regional Materials, Manufactured Locally.
3. Credit MR 5.2, Regional Materials, Harvested / Extracted Locally.
4. Credit MR 6, Rapidly Renewable Materials.
5. Credit EQ 4.1, Low Emitting Materials, Adhesives & Sealants.
6. Credit EQ 4.1, Low Emitting Materials, Paints.

1.5 QUALITY ASSURANCE

A. Engineering:

1. The assemblies require deferred approval (design/build). The Contractor is responsible for the engineering, fabrication and installation of the louvers and their connections to the structure within the physical limitations indicated on the Drawings.
2. Drawings and calculations for the louvers shall be prepared by a California-licensed professional engineer and shall be submitted to authorities having jurisdiction for approval; Contractor shall pay fees incurred therefrom before start of installation.
3. Provide structural calculations prepared in compliance with referenced documents and these Specifications. Calculations shall be legible and shall incorporate sufficient cross references to shop drawings to make calculations readily understandable and reviewable. Test reports are not an acceptable substitute for calculations. Calculations shall include:

   a. Analysis of framing members.
   b. Analysis of anchors, including anchors embedded in concrete.
   c. Section property computations for framing members.
   d. Seal and signature of professional engineer.

4. Fasteners and connections are shown schematically.

   a. Fasteners or connections shall not conflict with or require revision of the finish profiles of the louvers or the supporting work.
   b. Connections to the structural frame shall not impose any eccentric loading, or induce twisting or warping.
   c. Connections to the structural frame shall be able to accommodate misalignment of the structure within limits allowed by the AISC tolerances.

B. Welding:

1. Qualify procedures and personnel according to AWS D1.1, Structural Welding Code-Steel, and AWS D1.3, ”Structural Welding Code-Sheet Steel”.
2. Examine that welders to be employed in this work have satisfactorily passed AWS qualification tests.
3. If recertification of welders is required, retesting will be Contractor's responsibility.

PART 2 - PRODUCTS

2.1 MANUFACTURER

A. Airolite Co., Inc.
B. Construction Specialties, Inc.
C. Industrial Louvers, Inc.
D. Cesco Products, Greenheck.
E. Or equal.

2.2 DESIGN CRITERIA & PERFORMANCE REQUIREMENTS

A. Structural performance: Provide assemblies capable of withstanding the effects of wind, seismic and gravity loads, within limits and under conditions indicated, without permanent deformation of louver components, noise or metal fatigue caused by louver blade rattle or flutter, or permanent damage to fasteners and anchors. Wind pressures shall be considered to act on vertical projection of louvers.

1. Wind loads: Provide assemblies, including anchorage, that accommodate the wind load indicated on the Structural Drawings, supporting structure deflection from uniformly distributed and concentrated live loads indicated without failure of materials or permanent deformation.
2. Live loads: Provide assemblies, including anchorage, that accommodate the supporting structure deflection from uniformly distributed and concentrated live loads indicated without failure of materials or permanent deformation.
3. Movements of the structural-support: Provide assemblies that accommodate structural movements including, but not limited to, sway and deflection.
4. Seismic performance: The building is in Seismic Design Category (SDC) indicated on the Structural Drawings as defined by the CBC. Engineer, fabricate and Install assemblies requiring special bracing or mounting to meet the Seismic Design Category without failure or damage.

B. Thermal movements:

1. Provide louvers that allow for thermal movements resulting from the following change (range) in ambient and surface temperatures without buckling, opening of joints, overstressing of components, failure of connections, and other detrimental effects.
2. Base movements for a minimum material temperature increase of 100 degrees F and decrease of 50 degrees F relative to time of installation.
3. For thermal design, the design winter surface temperature shall be plus 30 degrees F.
4. The design summer surface temperature shall be at least 180 degrees F.
5. Components including adhesive and sealants shall be capable of withstanding without failure design winter temperature to design summer temperature with simultaneous specified loads.
6. Assume a building interior temperature range of 50 to 80 degrees F.

C. Air performance, water-penetration, air-leakage, and wind-driven rain ratings: Provide louvers complying with performance requirements indicated, as demonstrated by testing manufacturer's stock units identical to those provided, except for length and width according to AMCA 500-L.

2.3 MATERIALS

A. Aluminum blades and frame: 6063-T52 alloy.
B. Steel reinforcement: ASTM A 36.
C. Fasteners: Stainless steel or aluminum for aluminum-to-aluminum, galvanized steel for anchorage to supporting structure. Use Phillips flat-head machine screws for exposed fasteners.
D. Welding electrodes: As recommended by the aluminum producer and AWS.
E. Anchors and inserts:

1. Non-ferrous metal or hot-dip galvanized anchors and inserts.
2. Use steel or lead expansion bolt devices for drilled-in-place anchors.
3. Furnish inserts, as required, to be set into concrete and masonry.

F. Birdscreen: 1/2-inch mesh, 0.063-inch diameter galvanized wire, crimped aluminum screen material.

G. Paint:

1. For finish on exposed surfaces: As specified in Section 08 42 13.
2. For concealed ferrous metal surfaces: Tneme-Zinc 90-93 by Tnemec, Zinc-Lock 308 by Porter International, or MZ-4 Epoxy Zinc-Rich Primer by Valspar Corp.
3. Bituminous paint: Cold-applied asphalt mastic paint complying with SSPC-Paint 12, except containing no asbestos, and formulated for 30-mil thickness per coat.

H. Sealants: As specified in Section 07 92 00.

2.4 FABRICATION

A. Fabricate louvers with continuous horizontal, weather type blades; minimum blade thickness shall be 0.125-inch unless Contractor demonstrates that the following criteria can be met with a lesser thickness (but not less than 0.062-inch.

1. Limit mid span deflection of louver to L/175.
2. Aerodynamic shudder or displacement shall not occur at design wind load plus design throughput of louver.

B. Form blades and frames to the profiles, sizes and spacing indicated from minimum 0.08-inch aluminum extrusions. Overlap blades and "hook" both edges to prevent blow-through of water.

1. Provide concealed vertical stiffener assemblies of plates, angles, tees or shapes as required for rigidity, welded or fastened to the inside face of each blade.
2. Form ends of blades flat against frame jamb for fastening.

C. Frame louvers with mitered or coped and continuously welded or riveted and soldered joints.

1. Weld or rivet and solder blades to frames at each end, so that all joints will be watertight.
2. Reinforce frames and blades as required for stiffness and to comply with the design criteria.

D. Provide sill extensions and loose sills of same material as louvers, where indicated or required for drainage to exterior and to prevent water penetration to interior.
E. Form frame to provide tolerances for installation, with sealants in joints between louvers and adjoining work.
F. Finish louver assemblies, except bird screens, with a clear, anodized coating, as specified in Section 88 43 13.

PART 3 - EXECUTION

3.1 EXAMINATION

A. Examine adjacent construction and supports.
B. Verify that openings are within allowable tolerances, plumb, level, clean, will provide a solid anchoring surface.
C. When areas behind louvers will be difficult to access after installation, clean free of debris and dust.
D. Correct detrimental conditions before proceeding with installation.

3.2 INSTALLATION

A. Place louvers plumb, level and in proper alignment with adjacent work.
B. Anchor securely to adjacent construction as indicated on the approved shop drawings. Use concealed anchorages wherever possible.

C. Form tight, flush joints with exposed connections accurately fitted together.
D. Protect unpainted aluminum surfaces that will be in contact with cementitious and dissimilar metals from corrosion and galvanic action by applying a heavy coating of bituminous paint or by separating surfaces with waterproof gaskets or nonmetallic flashing.
E. Install removable bird screens in louver frames.
F. Repair finish damaged by cutting, welding, soldering and grinding operations required for fitting and jointing. Restore finish so that there is no evidence of corrective work or return damaged parts to the shop for refinishing.
G. Seal joints between louvers and adjacent construction as specified in Section 07 92 00.

END OF SECTION

SECTION 09 22 16 - NON-STRUCTURAL METAL FRAMING

PART 1 - GENERAL

1.1 SUMMARY

A. Section includes non-structural metal framing (NSMF) as follows:

1. Interior steel studs and furring.
2. Resilient sound clips.
3. Resilient channels.
4. Backing plates not provided by other trades for support of items attached to metal framing system.

B. Work installed but furnished in other Sections:

1. Access panels furnished by electrical and mechanical trades for access to their work.
2. Backing plates furnished with fixtures and equipment attached to, or supported by metal framing system.

C. Related requirements:

1. Division 01 for LEED requirements.
2. Division 05 for cold-formed steel framing (exterior walls).
3. Division 09 for ceiling and soffit suspension systems.

1.2 SUSTAINABLE DESIGN REFERENCE

A. USG Green Building Council (USGBC).

1.3 DEFINITIONS

A. AHJ: Authorities Having Jurisdiction.

1.4 ADMINISTRATIVE REQUIREMENTS

A. Pre-construction meeting: Prior to starting erection of the NSMF, arrange a preliminary meeting between trades associated with the work of this Section, the Contractor, and subcontractors whose work is supported by the NSMF; invite a representative of the Fire Marshall as appropriate.

1. Review locations of access panels, and fire extinguisher cabinets; the latter with a representative of the Fire Marshall.
2. Identify those locations on the slab. Use a removable marker where the slab is scheduled to remain exposed in the Work.
3. Review installation methods, procedures, time schedule and conditions under which work will proceed, including stud manufacturer's instructions and coordination required with related work.
4. Review and verify availability of materials and installer’s experience.

B. Coordination:

1. Notify concerned trades of items required to be incorporated into work of other Sections. Certain components specified under this Section includes items which are closely integrated with doors, glazing assemblies and work specified in other Sections that require close coordination with the work of this Section.

2. Be responsible for coordination required to ensure correct installation procedures and results.

3. Verify actual locations of embeds and existing adjacent structural supports by field measurements before erection. Coordinate tolerances of other trades that may affect the work of this Section.

1.5 SUBMITTALS

A. Data: Manufacturer Product Data consisting of a complete list of materials together with brochures and descriptive data of all items proposed for use.
B. Load tables: Load and deflection tables properly annotated for anticipated use for all studs.
C. Shop Drawings:

1. Large scale, dimensioned shop drawings for assemblies engineered by the Contractor.
2. Indicate component details, framing layout, framed openings, location of resilient channels, [**location of resilient clips,**]anchorage to structure, seismic bracing, type, and location of fasteners and welds, and accessories required of Related requirements.

D. LEED: LEED certification product data as specified in Section 01 81 13, “Sustainable Design Requirements”, for the following LEED credits.

1. Credit MR 4.1 & 4.2, Recycled Content.
2. Credit MR 5.1, Regional Materials, Manufactured Locally.
3. Credit MR 5.2, Regional Materials, Harvested / Extracted Locally.
4. Credit MR 6, Rapidly Renewable Materials.
5. Credit EQ 4.1, Low Emitting Materials, Adhesives & Sealants.
6. Credit EQ 4.1, Low Emitting Materials, Paints.

1.6 QUALITY ASSURANCE

A. Fire resistance: Where a fire resistance classification is indicated, provide materials, accessories, and application procedures listed by UL, or tested according to ASTM E 119 for the type of construction shown, and acceptable to authorities having jurisdiction.
B. Welding work qualifications:

1. Qualify welding procedures and welding operators in compliance with AWS "Qualification" requirements for AWS D1.3.
2. Verify that welders to be employed in this work have satisfactorily passed AWS qualification tests.
3. If recertification of welders is required, retesting will be Contractor's responsibility.

C. Engineering responsibilities:

1. Delegated design is required for certain metal assemblies; they are not fully detailed on the Drawings which indicate desired profile and design intent.
2. It is the Contractor's responsibility to engineer, fabricate and install these assemblies to conform to the profiles indicated and other requirements of the Contract Documents, and to satisfy applicable Code. If required by AHJ, obtain their approval and pay fees incurred thereby before start of installation.
3. Limit metal framing systems deflection under loads specified below to the following:

a. L/240 where supporting gypsum board only.
b. L/360 where supporting ceramic tile.

1.7 HANDLING

A. Store materials under cover, off the ground or floor, in a dry, ventilated space.

PART 2 - PRODUCTS

2.1 PERFORMANCE REQUIREMENTS

A. Unless otherwise indicated, NSMF requires deferred submittal (design/build). The Contractor is required to design, within the dimensional parameters indicated, and engineer the NSMF assemblies to withstand the following loads, applied perpendicular to walls at the point of largest deflection, within the specified deflection limits.

1. At spaces and rooms opening to the outside: 15 psf.
2. Elsewhere: 5 psf.

2.2 MANUFACTURERS

A. General: One of the following ~~systems~~ of the size indicated and gage required to comply with criteria specified.

1. Alabama Metal Industries Corp.
2. Cemco.
3. ClarkDietrich Building Systems.
4. Marino Industries, Inc.
5. Scafco Corp.
6. Superior Steel Studs, Inc.
7. Or equal.

2.3 STUDS, RUNNERS AND FURRING

A. Studs:

1. Shaftwalls: As specified above.
~~2.For low (Pony) walls: Scafco Corp. “Pony Walls” assemblies, or equal.~~
2. Elsewhere:

a. General: ASTM C 645, punched web, of the size, gage (thickness), and spacing indicated on the Drawings and specified, complying with the following, as applicable.
b. Protective coating: ASTM A 653, G40 zinc coating.
c. Bracing: Where the wall finish does not adequately brace both flanges of studs, bracing shall be added or allowable stresses shall be reduced in computing stud heights in compliance with Code.

B. Top and bottom runner, and bridging:

1. As recommended by the manufacturer of each stud type and of same-gage as stud in same wall or partition, unless otherwise indicated on the Drawings. Provide unpunched, screwable tracks, gage to match studs, 1-1/2-inch flanges.
2. For fire-rated partitions:

a. “MaxTrk” by ClarkDietrich Building Systems.
b. “Fire Trak” by Fire Trak Corp.
c. "Sliptrack Systems, Inc. "Slip-Trk"

d. "VertiTrack VTD VTX" by the Steel Network.
e. Runners by Blaze Frame, or other Code-compliant assemblies acceptable to the Design Consultant.
f. Or equal.

3. Elsewhere: Use either "Slip Track 250" by ClarkDietrich Building Systems, or equal track matching the stud gage in same wall but with a 2-1/2 inch leg, or a deep leg 54 mils thick (16-gage) minimum slip connection to accommodate slab deflection.

C. Furring channels:

1. For gypsum board:

a. Zee furring channels: 30 mils thick (20-gage) model ZFN3 by Dietrich Industries, Inc., or equal of depth to match insulation thickness, or equal.
b. All others (except resilient channels): 18 mils thick (25-gage) minimum, galvanized, hat-shaped.

2. For lath/plaster: 3/4-inch size as specified hereafter for runner channels.

D. Horizontal stiffener, runner channels and bridging: 54 mils thick (16-gage) channels fabricated of cold-rolled steel, ASTM A 366, with flanges not less than 7/16-inch wide. Minimum weights as follows:

Channel Size	Flange Width	Pounds/1000 linear foot
3/4-inch	7/16-inch	300
1-1/2-inch	7/16-inch	475
2-inch	19/32-inch	590

E. Resilient channels: RC-1 by USG, R/FC-1 by Dale Industries, Resilient Channels by Scafco, or equal, fabricated from steel sheet complying with ASTM A 924 or ASTM A 568.
F. Resilient sound clips: Super Soundproofing Co., "SSP Sound Isolation Clips," Acoustical Surfaces, Inc. "Noise STOP clips RSIC-1," or equal.

2.4 FASTENERS AND ACCESSORIES

~~A. For low (Pony) walls: Use "Floor Anchor" stud reinforcement by Pinquist Tool & Die Co., Inc., or equal, at every stud.~~

A. Screws: ASTM C 1002 for metal framing 18 mils thick (25-gage) and lighter, ASTM C 954 for heavier metal framing, 3/8-inch head diameter, corrosion-resistant pan head screws; length and gage required by Code, or recommended by the metal framing manufacturer when not prescribed by Code.
B. Shot pins: 0.140-inch diameter low velocity powder-actuated drive pins equivalent to Ramset/Red Head No. 1508, or equal, with 7/8-inch minimum penetration into concrete.
C. Furring channel clips: Manufacturer standard clips for attaching gypsum board furring channels to runner channels.
D. Welding electrodes: ASTM A 233, as recommended by AWS for the conditions of use and the metals to be welded.
E. Wire: ASTM A 641, galvanized, soft-annealed steel, minimum gage as follows.

1. Furring channel to runner channel: 16 BW gage.
2. Ties and splices in channels: 18 BW gage.

PART 3 - EXECUTION

3.1 EXAMINATION

A. Examine conditions and measurements affecting the work of this Section at site.
B. Correct detrimental conditions before proceeding with installation.

3.2 INSTALLATION VERTICAL FRAMING

A. General:

1. Erect metal framing systems in compliance with their manufacturer's recommendations, the reference standards, the Drawings and these Specifications.
2. Use minimum 33 mils thick (20-gage) studs at the following locations:

   a. Door openings.
   b. Studs supporting backing plates, plumbing fixtures and wall-supported cabinets.
   c. Elsewhere as indicated.

3. Do not attach metal framing to ducts, conduits or pipes. Do not allow metal framing and suspension wires to contact pipes.
4. Isolate framing from transfer of structural loading, both horizontally and vertically. Provide slip or cushioned type joints to attain lateral support and avoid axial loading.
5. Cut framing components squarely for a tight fit against abutting members. Erect framing plumb and level to provide solid backing for finish materials. Install all steel studs in a wall/partition so that their flanges point in the same direction.
6. Do not exceed a 1/8-inch in 10 feet deviation (non-cumulative) from true lines and levels, or 1/4-inch from true position. Perform necessary remedial work on framing to achieve specified tolerances.

B. Wall/partition framing:

1. Layout partitions [, soffits and ceiling breaks,] and permanently mark on slabs and soffits.
2. Align and securely anchor ceiling and floor tracks to building construction.
3. Space anchors within 6 inches of ends of each track segment and at 24 inches o.c. maximum. Do not drive fasteners closer than 2 inches to slab or curb edge.
4. Frame all openings in stud walls. Provide double studs, closer spacing, and additional reinforcement as detailed or required at door frames, borrowed light frames (interior windows), and recesses for equipment.
5. Frame both sides of control joints in gypsum board surfaces [, and Portland cement plaster surfaces] with separate studs and discontinuous runner; do not bridge the joint with system components or accessories.
6. Assemble corners using a minimum of 3 studs.
7. Install studs in single length, without joints, extending from floor to underside of floor or roof structure above, except where indicated on the Drawings to stop at or above suspended ceilings. Splicing studs is not permitted without the Design Consultant's approval.
8. Where studs stop at or above suspended ceilings, unless otherwise indicated, brace every fourth stud (maximum) with opposite stud bracing at 45-degree angle securely anchored to the floor or roof above.
9. Offset studs where required so that finished wall surface will be flush.

10. Attaching studs to runner:

    a. Attach studs to tracks by friction fit for single stud gypsum board partitions.
    b. Attach the following studs to runner tracks with screws or with a crimping tool in compliance with the stud manufacturer's printed instructions, except where indicated to be welded.

        1) Studs with gypsum board on only one side.
        2) Studs supporting lath/plaster assemblies.
        3) Studs on each side of doors and windows.
        4) Studs supporting wall hung plumbing fixtures.
        5) Studs supporting wall hung urinal screens, toilet compartments, cabinets and equipment.

    c. Attach corner studs, partition intersections, studs on each side of door jambs, and other openings in walls/partitions as specified in Paragraph "b" above.
    d. Weld studs where indicated on the Drawings.

11. Unless otherwise indicated, provide horizontal stiffeners consisting of 3/4-inch channels spaced at not more than 54 inches o.c. maximum in all partitions/walls supporting wall supported cabinets[and lath/plaster assemblies, and stone]. Tack-weld stiffeners to each stud.

    a. Provide an additional 3/4-inch channel 6 inches above door head and extend 2 stud spaces beyond jamb studs.
    b. Install channels in longest possible lengths; lap 12 inches and wire-tie at joints. Do not tie channels on opposite sides of staggered and double stud partitions together.

12. Double gypsum board studs (face to face to form a tube) adjacent to doors and openings. Extend studs at door openings to slab or deck above and anchor securely to bottom track (as specified in subparagraph 11.b. above) and to top slab or deck with clip angles.

    a. Locate additional studs not more than 2 inches from door and window frames, abutting partitions, partition corners, and other construction.
    b. Install a section of track over door and window frames with a clip angle at each end and attach securely to the adjacent vertical studs.
    c. Install cut-to-length studs at the location of vertical joints and at standard spacing over the door frame header extending to the ceiling track.

13. Install studs 2 inches away from abutting concrete, steel columns or other structural elements. Extend the horizontal stiffeners and attach it to the structural element.
14. Provide additional framing, as required, for attachment of electrical boxes, fire extinguisher cabinets and similar items located in stud walls.

C. Resilient furring channels:

    1. Install, with mounting flange down, at right angle to studs, starting within 2 inches of floor and 6 inches from ceiling.
    2. Splice channels directly over studs and attach through both flange to studs.
    3. Space channels as indicated on the Drawings.
    4. Drive screws through channel attachment flange and studs at each intersection.

D. Resilient sound clips: Install the resilient clips in accordance with their manufacturer’s instructions, and the following at the spacing indicated.

    1. Install clips level and aligned on each wall.

2. Space bottom clips (and supported channel) no more than 3 inches from floor.
3. Space top clips (and supported channel) no more than 6 inches from ceiling.
4. Install furring channels securely in each clip.

3.3 FURRING

A. Provide furring attached to metal framing to conceal utilities, furred soffits, and other furring as indicated.
B. Furring to receive gypsum board shall be screw-on channels directly attached to backing material, or applied over runner channels as applicable.
C. Space furring as indicated for studs.

3.4 WELDING

A. Perform welding in compliance with AWS recommendations. Welders shall be qualified to weld lightgage metal. Provide stitch plates where studs are burned-through.

3.5 BACKING PLATES

A. Backing plates may be omitted if anchorage for wall-hung items is directly into steel studs of 43 mils thick (18-gage) or heavier, or items are furnished with equal mounting devices.
B. Wall-mounted and wall-hung items that require backing plates, without limitation, include the following:

1. Wall supported railings.
2. Grab bars.
3. Toilet compartments and screens.
4. Toilet room accessories.
5. Wall and base cabinets.
6. Plumbing fixtures.
7. Ladders.
8. Wall mounted door stops.
9. Bracket-mounted fire extinguishers.
10. Signage.
11. Window shades.
12. Wall mounted furniture.
13. Visual display and tack boards.
14. Wall-mounted shelving.

C. Unless otherwise indicated, plates not provided with fixtures and equipment shall be long enough to span, as a minimum, across 3 studs and may be one of the following:

1. Fifty-four mils thick (16-gage) minimum steel plate by 4 inches wide.
2. Fifty-four mils thick (16-gage) unpunched wide flange stud by 4 inches wide.

D. Notch studs so that backing plate will be flush with exterior face of stud.
E. Weld plates continuously along all contact surfaces at each stud crossing, or secure with 2 countersunk machine screws at each stud.

END OF SECTION

SECTION 09 22 26 - CEILING & SOFFIT SUSPENSION SYSTEMS

PART 1 - GENERAL

1.1 SUMMARY

A. Section includes ceiling and soffit suspension systems for gypsum wallboard, acoustical plaster system, and Portland cement and acoustical plaster assemblies.

B. Related requirements: Division 01 for LEED requirements.

1.2 SUSTAINABLE DESIGN REFERENCE

A. USG Green Building Council (USGBC).

1.3 SUBMITTALS

A. Shop drawings:

1. Dimensioned shop drawings of all ceiling and soffit suspension and framing system.
2. Show plan layout.
3. Detail attachment to overhead construction.
4. Identify and dimension adjacent materials and supports.

B. Data: Manufacturer product data, including specifications and installation instructions for each type of suspension system, including provisions for fixture and equipment anchorage.

C. LEED: LEED certification product data as specified in Section 01 81 13, “Sustainable Design Requirements”, for the following LEED credits:

1. Credit MR 4.1 & 4.2, Recycled Content.
2. Credit MR 5.1, Regional Materials, Manufactured Locally.
3. Credit MR 5.2, Regional Materials, Harvested / Extracted Locally.
4. Credit MR 6, Rapidly Renewable Materials.
5. Credit EQ 4.1, Low Emitting Materials, Adhesives & Sealants.

1.4 HANDLING

A. Store materials undercover, off the ground or floor, in a dry, ventilated space.

PART 2 - PRODUCTS

2.1 PERFORMANCE CRITERIA

A. Suspension system shall have a “Heavy Duty” classification when tested in compliance with ASTM C 635.

B. Suspension system shall comply with ASTM E 580, Installation of Metal Suspension Systems for Acoustical Tile and Lay-In Panels in Areas Requiring Seismic Restraint.

~~B.~~C. Ceiling support system shall limit deflection under load of finished ceilings to less than L/360 for ~~lath/~~plaster and L/240 for gypsum board.

D. Ceiling suspension systems shall, at a minimum, comply with

2.2 MATERIALS

A. Metal channels: ASTM C 645, galvanized in compliance with ASTM A 924, G60 coating designation.

1. Framing, furring and stiffening:

Size	Type	Pounds per 1,000 linear feet
3/4-inch with 7/16-inch flanges	Cold-rolled	300
One-inch	Hot-rolled	410
1-1/2-inch with 7/16-inch flanges	Hot-rolled	475
2 inches	Cold-rolled	590

2. Furring channels: Minimum 16 mils thick (26-gage) galvanized steel with knurled faces, hat-shaped or Zee section as required.

B. Hanger wire: Galvanized, soft, mild annealed steel, 0.145-inch diameter (8 BW gage) unless otherwise indicated.
C. Diagonal bracing wire: Galvanized, soft, mild annealed steel, 0.109-inch (12 BW gage) unless otherwise indicated.
D. Tie-wire: 0.0598-inch (16-gage), galvanized, single-strand annealed steel or 0.0478-inch (18-gage), galvanized, double-strand annealed steel.
E. Fasteners and attachments:

1. Screws: ASTM C 1002, 3/8-inch head diameter, cadmium-plated pan head screws; length and gage required by Code, or recommended by recommended by manufacturer for uses and materials involved.
2. Furring channel clips: Manufacturer standard clips for attaching gypsum board furring channels to runner channels.
3. Welding electrodes: ASTM A 233, as recommended by AWS for the conditions of use and the metals to be welded.
4. Hanger and bracing wire fasteners for concrete and metal deck with structural concrete fill: Unless otherwise indicated, provide ITT Phillips Drill Div., Red Head Sleeve Anchor No. TW-1614, 5/16-inch diameter, or equal, minimum 2-1/4-inch embedment.

F. Uplift stiffeners: 0.0209-inch (25-gage) channel studs, 1-1/2-inch or compression posts indicated on the Drawings.

PART 3 - EXECUTION

3.1 EXAMINATION

A. Examine conditions and measurements affecting the work of this Section at site.
B. Correct detrimental conditions before proceeding with installation.

3.2 CEILING SUSPENSION FRAMING

A. For acoustical ceiling tiles, comply with ASTM E 580, Installation of Metal Suspension Systems for Acoustical Tile and Lay-In Panels in Areas Requiring Seismic Restraint.
B. Space main runners not over 4 feet o.c. in any dimension so that hanger wires do not support more than 12 square feet of ceiling.
C. Hang suspended framing independent of walls, columns, pipes, ducts, and conduits, and their insulation.
D. Do not attach wires to, or bend around, interfering material such as ductwork, pipes and conduits. Provide trapeze, or equivalent devices substantiated by detailed shop drawings and calculations, where obstructions interfere with direct suspension.
E. Space runner channels not more than 6 inches from parallel walls or beams.

1. Align runner channels accurately relative to indicated ceiling height and saddletie with hanger wires.
2. Lap channels 12 inches at splices and tie at each end of lap.

F. For gypsum board soffits and ceilings, install 7/8-inch hat channels perpendicular to carrying channels, spaced 16 inches o.c. and within 6 inches of walls.

1. Provide one-inch clearance between furring channels and abutting walls and partitions.
2. Attach to carrying channels with furring channel clips or wire-tie with triple wrap and triple twist.
3. At splices, nest furring channels with a minimum 8 inches overlap and wire-tie each end.

G. For plaster soffits and ceilings, install 1-1/2-inch cold-rolled cross-furring channel spaced 4 feet o.c. and 7/8-inch hot-rolled channels on 16-inch centers, and within 6 inches of walls.

1. Stop main runners penetrations and perimeter walls one-inch.
2. Provide one-inch clearance between cross furring channels and abutting walls and partitions.
3. Attach to carrying channels by saddle tying with 3 strands of 18-gage tie wire with triple wrap and triple twist.
4. At splices, nest cross furring channels with minimum 8-inch overlap and wire tie each end.

H. Install 4-way, 45-degree diagonal bracing wires in a 12-foot grid maximum.

I. Stiffener:

1. For gypsum board ceiling/soffits, install uplift stiffener for each 144 square feet of ceiling, consisting of a vertical metal stud occurring at the junction of the carrier and furring channel. Wire-tie to carrier or screw to channel and secure to overhead structure.
2. For exterior plaster ceilings/soffits, use either 2 channels back-to-back wire-tied together, or rigid electrical conduit. In both cases, make the stiffener 1-1/2 inch shorter than the hanger wires to accommodate ceiling/soffit movement.

J. At control joints, provide discontinuous lap in main runners occurring over joints.

1. Do not bridge joints with cross furring where joints run perpendicular to furring.
2. Where joints run parallel to furring, provide furring to support each side of joint.

K. Provide recesses and openings where indicated for lighting fixtures, registers, access panels and other items to be installed in ceilings. Provide additional furring channels where required by opening condition.

END OF SECTION

SECTION 09 23 13 - ACOUSTICAL PLASTER SYSTEMS

PART 1 - GENERAL

1.1 SUMMARY

A. Section includes:

1. Seamless acoustical plaster ceiling system consisting of acoustical panels finished with trowel-applied acoustical plaster.
2. Acoustical plaster trowel-applied over gypsum wall board.

B. Related requirements:

1. Division 01 for LEED requirements.
2. Division 09 for the following

   a. Portland cement plaster.
   b. Ceiling furring channels.
   c. Painting acoustic plaster.

1.2 SUSTAINABLE DESIGN REFERENCE

A. USG Green Building Council (USGBC).

1.3 SUBMITTALS

A. Data: Manufacturer Product Data, including installation instructions, test data substantiating compliance with quality assurance.

1. Complete description of products to be supplied including product data and specifications.
2. Manufacturer's recommended application instructions and procedures.
3. Laboratory test data showing proposed product has been tested in accordance with latest editions of ASTM C 423 and ASTM E 795 and has met or exceeded specified Noise Reduction Coefficient (NRC) rating required.

B. Samples:

1. Minimum twelve-inch square sample of the following texture variations for approval.

   a. Acoustical ceiling board with the specified plaster finish.
   b. Gypsum wall board with the specified plaster finish.

2. Resubmit Samples as required until approved.
3. Samples must be certified by manufacturer as being representative of the texture that was acoustically tested in supporting acoustical test reports.

C. Test reports:

1. Test reports from all suppliers showing material to be 100 percent free of asbestos, mineral fibers, polystyrene and cellulose.

2. Testing results and procedures certified by Cedar Knolls Acoustical Labs, or other accredited independent testing laboratories. Peak thickness of test samples must be determined and reported by acoustical laboratory. Nominal thicknesses are not acceptable unless peak thicknesses are also reported. Edges of test samples must be sealed with wooden or metal frames.

3. NRC not less than 0.65 at one inch thickness and coefficient not less than 0.40, plus or minus 0.03, at 250 Hz. Conduct testing on solid backing with no air gap.

D. Certification: Certification of applicator licensing.

E. LEED: LEED certification product data as specified in Section 01 81 13, "Sustainable Design Requirements", for the following LEED credits:

1. Credit MR 4.1 & 4.2, Recycled Content.
2. Credit MR 5.1, Regional Materials, Manufactured Locally.
3. Credit MR 5.2, Regional Materials, Harvested / Extracted Locally.
4. Credit MR 6, Rapidly Renewable Materials.

1.4 QUALITY ASSURANCE

A. Installer's qualifications: Experienced firm licensed by manufacturer and who has successfully completed acoustical or other plaster installations similar in material, design, and extent to that indicated for Project.

B. Applicator qualifications:

1. Firm with a minimum of 3 years of successful experience in application of textured finishes similar to that specified.
2. Licensed or approved by manufacturer.

C. Mockup: At a location selected by the Design Consultant, prepare the following mockup at the job site prior to proceeding with the remainder of the work for the Design Consultant's approval.

1. Minimum 10 square foot sample panel of acoustical plaster ceiling, including ridge and valley intersections and edge condition.

~~2.Designated are of the gypsum board wall mockup specified in Section 09 29 00.~~

~~3.~~2. Modify or repeat sample panels when first ones are not satisfactory.

~~4.~~3. When approved, mockup may remain a part of the Work.

~~5.~~4. Remove unacceptable panels.

1.5 HANDLING

A. Keep material dry until ready for use.

1.6 PROJECT CONDITIONS

A. Do not apply materials when temperature is below 44 degrees F (ambient), or substrate is below 40 degrees F.

B. Provide ventilation, and avoid excess drying rates.

1.7 SPECIAL WARRANTY

A. Manufacturer shall warrant the material supplied, agreeing to repair/replace materials that crack, flake, dust excessively, peel or fall from substrate, or otherwise deteriorate to a condition where it would not perform effectively as intended for a sound-absorbent purpose.

B. Warranty period: 10 years from Substantial Completion.

PART 2 - PRODUCT

2.1 MANUFACTURERS/SYSTEM

A. Pyrok, Inc. “StarSilent” acoustical ceiling system (basis of design.).
B. BASWAphon “Classic” or “Fine.”
C. Or equal.

2.2 MATERIALS

A. Pyrok acoustical panels manufactured from recycled crushed glass and edge sealer.
B. Pyrok “Top Basic” plaster base coat, or equal.
C. Pyrok“Top Finish” coat, or equal, with a smooth finish to match approved sample; color ~~TBD~~will be selected by the Design Consultant.
~~D.Or equal.~~
D. Metallic trim pieces, treated for adhesion, to finish edges of plaster assemblies and reinforce all folds and edges.

2.3 PERFORMANCE REQUIREMENTS

A. Density: 1.8 Lbs./Sq.Ft, STM E 605.
B. Surface Burning Characteristics: 15, ASTM E 84.
C. Sound Absorption: NRC = 0.55 – 0.75, ASTM C 423.
D. Compression Strength 125 PSI, ASTM E 761.

PART 3 - EXECUTION

3.1 EXAMINATION

A. Examine substrate and conditions.
B. Verify that substrates are free of oil, grease, dirt, paint, or other matter that would impair bond or install metal lath as recommended by the manufacturer.
C. Preparation of existing substrates to receive this work is a responsibility of this Section. Prepare substrate by filling voids and cracks and offsets, and removing projections that would result in telegraphing presence of imperfections.
D. Correct other unsuitable conditions before proceeding with installation.

3.2 PROTECTION

A. Mask adjoining surfaces to minimize damage from plastering activities.
B. Provide temporary enclosures to confine operations.

3.3 APPLICATION

A. Follow acoustical plaster ceiling manufacturer’s instructions.
B. Install cold-rolled channels on 4-foot centers and 20-gage 7/8-inch hat channels 16 inches o.c.
C. Fasten panels to ceiling framing.
D. Apply edge sealer to panel edges and over fasteners.
E. Sand over fasteners and panel seams.
F. Apply base coat over the entire surface.
G. Apply acoustical plaster finish coat uniformly over the base coat and trowel to a smooth plaster finish to match approved mockup for texture and color.

3.4 CLEANING AND PATCHING

A. Remove fallout materials immediately upon completion of the work in each area. Clean surfaces to remove evidence of soiling.
B. Patching and repairing acoustical plaster, regardless of the source or cause of the damage, shall be performed by the original installer and shall match the adjacent undamaged surfaces, as approved by the Design Consultant.

END OF SECTION

SECTION 09 29 00 - GYPSUM BOARD

PART 1 - GENERAL

1.1 SUMMARY

A. Section includes:

1. Gypsum board.
2. Fasteners, joint reinforcing and finishing compound.

B. Selective demolition is specified in Division 02 but repair and preparation of substrates and adjacent and abutting materials to receive the work specified herein is a responsibility of this Section.

~~B.~~C. Related requirements:

1. Division 01 for LEED requirements.
2. Division 06 for wood framing and sheathing.
3. Division 06 for gypsum sheathing board.
4. Division 08 for access panels in gypsum board surfaces.
5. Division 09 for soffit board.

1.2 SUSTAINABLE DESIGN REFERENCE

A. USG Green Building Council (USGBC).

1.3 SUBMITTALS

A. Data: Manufacturer Product Data for all materials to be used in gypsum board construction.

B. Shop Drawings: Show proposed locations of control joints. Joint location is subject to the Design Consultant's approval and shall be relocated, when requested, at no cost to the City.

C. LEED: LEED certification product data as specified in Section 01 81 13, "Sustainable Design Requirements", for the following LEED credits:

1. Credit MR 4.1 & 4.2, Recycled Content.
2. Credit MR 5.1, Regional Materials, Manufactured Locally.
3. Credit MR 5.2, Regional Materials, Harvested / Extracted Locally.
4. Credit MR 6, Rapidly Renewable Materials.
5. Credit EQ 4.1, Low Emitting Materials, Adhesives & Sealants.

D. Closeout: Deliver artwork hangers, packaged and labeled for the City's use.

1.4 QUALITY ASSURANCE

A. Requirements of regulatory agencies:

1. Comply with fire resistance ratings indicated and required by Code.
2. Provide materials, accessories and application procedures listed by UL or tested in compliance with ASTM E 119 for the type of construction shown.

~~B.Mockup:~~

~~1.Where directed, construct a mockup of a gypsum board wall and ceiling inside the building. Make mockup full height (minimum 8 feet high by 8 feet wide) with a 4-foot return.~~

~~2.Tape and finish joints, trim and screw heads as specified for Level 5 herein. Refer to Section 09 23 13 for finishing the ceiling and a designated portion of the wall with~~

~~acoustical plaster, and Section 09 90 00 for painting the remainder of the walls with a semi-gloss paint.~~

~~3.The Design Consultant will review the mockup under various light conditions for defects and improperly finished joints, trim and screw heads. Provide a portable light for that purpose when so requested.~~

~~4.Make corrections requested by the Design Consultant, or remove and replace mockup when the corrective work is not acceptable to the Design Consultant.~~

~~5.The approved mockup shall remain in the building until its removal is directed, and will be used as a standard for the gypsum board work for the Project.~~

1.5 HANDLING

A. Procedure: In accordance with GA 801 "Handling and Storage of Gypsum Panel Products."
B. Storage: Do not overload the floors with localized concentration of gypsum board.

1.6 JOB CONDITIONS

A. Comply with the gypsum board manufacturer's recommendations and GA “Application and Finishing of Gypsum Board” for temperature limitations and ventilation before, during and after installation of gypsum board.
B. Protect installed materials from drafts during hot, dry weather.
C. Illuminate work areas during installation to provide the same or greater level of illumination required to properly perform the work and as will occur in the room or space after the building is in operation.

PART 2 - PRODUCTS

2.1 GYPSUM BOARD MANUFACTURERS

A. BPB America, Inc.
B. CertainTeed.
C. G-P Gypsum Products.
D. Goldbond Building Products/Div. National Gypsum Co.
E. Lafarge Gypsum.
F. National Gypsum Co./Goldbond Building Products Division.
G. PABCO Gypsum.
H. Temple-Inland Co.
I. US Gypsum Co.
J. Or equal.

2.2 GYPSUM BOARD

A. General:

1. Provide boards complying with ASTM C 1396 as follows and in maximum lengths available to minimize end butt joints.
2. Unless otherwise acceptable to the Design Consultant, no end-to-end butt joints are allowed on walls or ceilings less than 12 feet long or wide.

B. Under ceramic tile, paperless, mold-resistant gypsum board (ASTM D 3273):

1. CertainTeed “GlasRoc.
2. Dens-Shield ”G-P Gypsum “Fireguard Tile Backer.
3. ”Temple Inland “Greenglass Gypsum Tile Backer”
4. Or equal.

C. In unlined air shafts and plenums: USG Sheetrock “Mold Tough,” or equal, meeting ASTM D 3273 for mold-resistance.
D. On ceilings: Contractor may use “Gypsum Ceiling Boards.”
E. For surfaces to be painted in Toilet Rooms: CertainTeed “Glasroc,” or equal embedded glass mat gypsum panels.
F. Elsewhere where gypsum board is exposed and painted: Standard, Type X or C boards, as applicable to the assembly. Provide boards with paper face suitable to receive decorative finish, and long edges tapered to receive joint compound.
G. Screws: The following sized in compliance with the gypsum board manufacturer's instructions and Code requirements. Do not use nails.

1. ASTM C 954 for fastening to supporting studs and furring.
2. ASTM C 1002, Type G for gypsum board-to-gypsum board.

H. Metal trim:

1. Galvanized steel of the types specified hereafter complying with ASTM C 1047.

a. LC-Bead: J-shaped; exposed long flange to receive joint compound; use at exposed panel edges.
b. CB corner bead: Square corner bead.
c. L-Bead: L-shaped; exposed long leg to receive joint compound; use where indicated.
~~d.U-Bead: J-shaped; exposed short flange not to receive joint compound; use at exposed panel edges.~~
~~e.~~d. Control joint: USG No. 093, Goldbond Building Products E-Z Strip, Trim-Tex 093V, or equal.

2. Aluminum trim: By Gordon Interior Specialties Division, Gordon, Inc., or equal, exruded aluminum alloy~~Type~~ 6063, complying with ASTM B 221.

a. Wall-to-ceiling reveal trrim: Series 400 reveal.
b. Recessed artwork hanging trim: Series 951.
~~b.~~c. Hangers: Final Forms I; provide one hanger for every 24 inches of track, plus 15 hangers~~, configurations and finish as indicated on the Drawings~~.

I. Joint treatment for paperless assemblies: 2-inch wide fiberglass mesh tape and ToughRock 90 Setting Type joint compound, or equal.
J. Joint tape, compound and laminating adhesive: ASTM C 475, low or very low shrinkage, type recommended by the manufacturer, by Hamilton Materials, (basis of design), USG or equal by one of the gypsum board manufacturers named above.

1. Taping, and fastener and metal trim concealment: Sheetrock Brand Taping Joint Compound, Ready-Mixed by USG, or equal.
2. Topping, finish and skim coats: Sheetrock Brand Topping Joint Compound, Ready-Mixed by USG, or equal.
3. Joint tape complying with ASTM C475: Sheetrock Joint Tape – Heavy by USG, or equal.

K. Sealants: As specified in Sections 07 92 00 and 09 80 00.

PART 3 - EXECUTION

3.1 EXAMINATION/PREPARATION

A. Examine conditions affecting the work of this Section at site.
B. Verify framing members’ straightness and alignment.

C. Correct detrimental conditions before proceeding with installation.
D. Before enclosing stud walls and spaces that will be inaccessible after gypsum board is installed, thoroughly clean spaces of debris and dust.

3.2 GYPSUM BOARD INSTALLATION - GENERAL

A. Comply with the applicable provisions of the references standards and the following.
B. Use only full size boards above door and window openings; joints at corners of heads are not acceptable.
C. Minimize butt joints and avoid butt joints centered on walls, over protruding studs, and above doors and windows. Avoid abutting end joints in the central area of each ceiling.
D. Install all gypsum panels, including those in non-rated applications, with joints in moderate contact.
E. Locate both edge or end joints over supports, except in ceiling applications where intermediate supports or gypsum board back blocking is provided behind end joints.
F. Position adjoining panels so that tapered edges abut tapered edges, and field-cut edges abut field-cut edges and ends.

1. Do not place tapered against cut edges or ends.
2. Where square (non-tapered) joints abut on ceilings, use Trim-Tex “Buttboard” behind the joint in accordance with Trim-Tex recommendations.

G. Stagger vertical joints over different studs on opposite sides of partitions.
H. Attach gypsum panels to steel studs so that the leading edge or end of each panel is attached to open (unsupported) edges of stud flanges first.
I. Attach gypsum panels to framing provided at openings and cutouts.
J. Provide perimeter relief where board abuts structural decks, ceilings, vertical structural elements, or glazed assembly.
K. Install horizontal boards first. Butt joints between boards loosely. Do not force boards into place. Place tapered or wrapped edges next to one another.
L. Attach boards to studs and furring members with power-driven screws securely engaging supporting member, and with fastener heads uniformly depressed not over 1/32-inch below surface of board (except for first layer of multiple layer assembly) without breaking face paper.
M. After boards are installed over screws and backing plates, tap boards with a rubber mallet to depress backside of board over heads to eliminate unacceptable bulges.

3.3 SINGLE LAYER APPLICATION

A. Horizontal surfaces:

1. Install board with long dimension at right angle to supports, with end joints located over supports.
2. Use maximum practical length boards to minimize end joints. Stagger end joints in alternate boards.

B. Vertical surfaces: Unless otherwise acceptable to the Design Consultant, install board vertically. Use floor-to-ceiling length boards (unless height exceeds 12-foot) with vertical joints located over supports.

1. At high walls, install panels horizontally, unless otherwise indicated or required by fire-resistance-rated assembly.
2. Offset joints at least one stud on opposite sides of partition/walls.
3. Extend gypsum board continuously from finish floor to underside of structure above, except where indicated otherwise on the Drawings.

C. Multiple layer application on vertical surfaces:

1. Install board vertically using floor-to-ceiling length boards (unless height exceeds 12 feet) with vertical joints located over studs.
2. Offset joints at least one stud spacing on opposite sides of partitions and between subsequent layers of gypsum board.
3. Fasten all layers of gypsum board to metal framing with screws.

D. Patching existing gypsum board: Patch to maintain the fire resistance of the assembly so that after a Level 5 is applied to the wall (go to nearest corner) and painting, the patch will be invisible from a distance of 2 feet under normal lighting conditions.

3.4 ALLOWABLE TOLERANCES

A. Do not exceed 3/16-inch in 8 feet, and 1/8-inch in 4 feet from plumb, level and flat (all directions) in gypsum board surfaces.
B. Do not exceed 1/16 inch offset at joints between boards.
C. Shim boards as necessary to comply with these tolerances.

3.5 FINISHING

A. Finish gypsum board surfaces with exposed joints, corners and edges reinforced or trimmed in compliance with GA-216 and the following.
B. General:

1. Fill joints, fastener heads, trim accessory flanges and surface defects with joint compound in compliance with the gypsum board manufacturer's recommendations to obtain a smooth, flush surface.
2. All joints, fastener heads and trim flanges in surfaces which will remain exposed to view in the building, shall be invisible after application of joint tape and compound. This requirement applies also to joints between new and existing work.

C. Trim: Install in single unjointed length, unless length exceeds manufacturer's standard. Attach to gypsum board in compliance with manufacturer's instructions.

1. Install Type CB trim at external corners.
2. Install Type LC trim where gypsum board edges are exposed in the finish work.
3. Install Type CB or LC trim where gypsum board abuts a different material, and the edges are not covered by a finish material.
4. Install control joints at no more than 30 feet on center in any direction (full height door frames count as control joints). Joint locations are subject to the Design Consultant's approval. When "through wall" control joints are required in fire-rated assemblies, comply with WH International, Inc. Report WHI 651-0318.1.

D. Joints: Reinforce joints between gypsum boards, and interior corners and angles with tape set in joint compound.

1. Apply skim coat over tape in one application.
2. Where space greater than 1/16-inch occurs between abutting gypsum boards (except at control joints and for concealed layers of multiple layer assemblies), pre-fill joints with joint compound and allow to dry before applying joint tape.
3. All joints and interior angles shall have tape embedded in joint compound and 2 separate coats of joint compound applied over all flat joints and one separate coat of joint compound applied over interior angles.

E. Joint compound:

1. Lap each coat not less than 4 inches over the preceding coat (2 inches on each edge). Width of joint compound on tapered board edges shall be not less than 12 inches; width of joint compound on square board edges not less than 18-inch.
2. Cover fastener heads and accessories with 3 separate coats of joint compound.
3. Allow at least 24 hours drying time between applications of joint compound.
4. Finish joint compound so that little or no sanding is required. When sanding, use sandpaper or mesh cloth with grit as fine as possible; do not scuff face paper. Remove sanding dust before painting or applying other finishes.

F. Finishing levels:

1. Level 1: Use in areas where the assembly will generally be concealed.
2. Level 2: Use where gypsum tile backer board is used as a substrate for tile, in storage and similar areas where surface appearance is not of primary concern.
3. Level 3: ~~Not used~~Use behind marker and tack boards.
4. Level 5 – skim coat (spray and roller-applied finish is not acceptable):

   a. Use for all public areas to be painted, including surfaces to be painted with dry-erase coating, and existing gypsum board to be patched. Finish, including joints and fasteners as follows to ~~match approved mockup~~the Design Consultant's satisfaction.
   b. Apply a thin skim coat of joint compound to the entire surface to result in a smooth surface free of tool marks and ridges. Use setting-type, sandable topping compound or drying-type; do not use all-purpose compound consisting of high-build interior coating product designed for application by airless sprayer.
5. Level 4: Use for all other locations, including walls to receive wall coverings~~ and marker boards and tack boards~~.

G. Leave gypsum board surfaces smooth, undamaged and ready to receive scheduled finishes.

END OF SECTION

SECTION 09 31 00 - CERAMIC TILE

PART 1 - GENERAL

1.1 SUMMARY

A. Section includes:

1. Ceramic floor and wall tile, and trim shapes.
2. Setting materials, grouts and sealants.
3. Waterproofing membrane.
~~4.Stone thresholds.~~

B. Related requirements:

1. Division 01 for LEED requirements.
2. Divisions 07 and 09 for sealants other than specified herein.

1.2 SUSTAINABLE DESIGN REFERENCE

A. USG Green Building Council (USGBC.

1.3 ADMINISTRATIVE REQUIREMENTS

A. Pre-installation meeting:

1. Prior to start of installation arrange a pre-installation meeting between the waterproofing manufacturer authorized representative, the Contractor, the Design Consultant, and the installer of to review Project conditions, the Drawings, Specifications and the waterproofing manufacturer data.
2. If more than one trade will be responsible for the successful performance of the work of this Section, these trades shall attend the meeting.
3. Identify areas of concern and remedial measures.
4. Record meeting minutes and distribute copy to all concerned, including the Design Consultant, within 7 days after the meeting.

B. Manufacturer’s inspections:

1. Request the manufacturer's presence before start of this work to verify substrate acceptability, and as required thereafter to review installation procedures and completed work, and to issue warranty specified.
2. Unsatisfactory conditions disclosed by the manufacturer visits to the site shall be promptly and satisfactorily repaired and the areas re-inspected by the manufacturer before work starts or resumes in affected areas.

1.4 SUBMITTALS

A. Samples:

1. Twenty-four-inch square samples of each type and color of tile glued to hardboard backing; grout joints.
2. Each type, color and shape of trim and base.
3. 12 inches long Samples of transition piece.
~~3.Six-inch long marble threshold, finished as specified.~~

B. Data: Manufacturer Product Data for waterproofing membrane, pre-mixed mortars and grouts, with certification that they meet ANSI standards specified when applicable.
C. Shop Drawings: Show locations of each type of tile and tile pattern. Show widths, details, and locations of expansion, contraction, control, and isolation joints in tile substrates and finished tile surfaces.
D. LEED: Leed certification product data as specified in Section 01 81 13, "SUSTAINABLE DESIGN REQUIREMENTS", for the following LEED credits:

1. Credit MR 4.1 & 4.2, Recycled Content.
2. Credit MR 5.1, Regional Materials, Manufactured Locally.
3. Credit MR 5.2, Regional Materials, Harvested / Extracted Locally.
4. Credit MR 6, Rapidly Renewable Materials.
5. Credit EQ 4.1, Low Emitting Materials, Adhesives & Sealants.

1.5 QUALITY ASSURANCE

A. Uniformity:

1. Obtain each color, grade, finish, type, composition, and variety of tile from a single source with resources to provide products of consistent quality in appearance and physical properties without delaying progress of the Work.
2. Obtain materials of a uniform quality from one manufacturer for each cementitious and admixture component and from one source or producer for each aggregate.

B. Installer qualifications: Experienced firm who has successfully completed tile installations similar in material, design, and extent to that indicated for Project for at least 5 years.
C. Master grade certificate: Submit, bearing the Certification Mark of the Tile Council of North America, Inc. (TCNA), signed by the tile manufacturer, stating the type and quality of each type of tile delivered to the job site.

1.6 HANDLING

A. Procedure: In accordance with ANSI A137.1 for labeling sealed tile packages.
B. Delivery: Deliver tile cartons with grade seals unbroken.

1.7 JOB CONDITIONS

A. Set and grout this work when ambient temperature is at least 50 degrees F or higher. Do not install materials on surfaces (or when ambient temperature) is less than 40 degrees F.
B. Illuminate work areas during installation to provide the same or greater level of illumination required to properly perform this work and as will occur in the room or space after the building is in operation.

1.8 SPECIAL WARRANTY

A. Warrant tile installation, including grout and waterproofing (system warranty), against faulty materials and workmanship for 15 years after Substantial Completion.
B. Make repairs required during the warranty period at no cost to the City.

1.9 MAINTENANCE

A. Furnish to the City one full box of each type, color and size of tile properly packaged and identified, by room or area.

PART 2 - PRODUCTS

2.1 MATERIALS – GENERAL

A. All components of the waterproofing and tile setting assemblies must be by the same manufacturer to obtain warranty specified.

2.2 TILE

A. Tile: By Spec Ceramics, DalTile, Natural Hues Price Group 2, or equal. Sizes as indicated on the Drawings. 4 colors TBD.

1. Floor tile: Shall meet the static coefficient of friction prescribed by ADAAG – 0.6 for level floors and 0.8 for sloped surfaces.
2. Trim: Provide matching base, caps, stops, returns, trimmers required to complete the installation.

B. Factory-blending: For tile exhibiting color variations within the ranges selected during sample submittals, factory-blend tiles and package accordingly so that tiles taken from one package show the same color range as those taken from other packages, and match approved samples.

~~2.3MARBLE THRESHOLDS~~

~~A.White veined marble, honed, MIA Group A complying with ASTM C 503 for exterior use and abrasion, uniform in color, with a minimum Ha of 12 when tested in accordance with ASTM C 1353.~~
~~B.Fabricate with a uniform honed (400 to 1,200 grit abrasive) finish on exposed surfaces for a tight fit against door jambs and a smooth transition between tile and adjoining floor surface.~~
~~C.Bevel edges at 1:2 slope, aligning lower edge of bevel with adjacent floor finish. Limit height of bevel to 1/2-inch or less.~~

2.3 SETTING MATERIALS AND GROUT

A. Portland cement: ASTM C 150, Type 1.
B. Latex modified dry-set mortar:

1. Thin set:

a. MerKrete “705” and “735”, or ” MerKrete “750 RS”
b. ”Mapei “Ultraflex 1 and 3 or “Granirapid” as selected by the installer for the conditions of use.
c. Or equal.

2. Medium bed:

a. MerKrete “720 Marble Pro”
b. Mapei “Franurapid.”
c. Or equal.

C. Grout:

1. Portland cement grout sanded or unsanded as applicable to the joint width and recommended by the grout manufacturer.

a. MerKrete “Versatile”
b. Mapei “Opticolor,”

c. Or equal.

2. Epoxy grout, 2 colors TBD:

a. MerKrete “Pro Epoxy.”
b. Custom Building Products “CEG.”
c. Or equal.

2.4 MISCELLANEOUS MATERIALS

A. Sealant and backup for control joints in tiles: Refer to Section 07 92 00.
B. Waterproof membrane:

1. “Hydo-Guard SP-1” by MerKrete.
2. “AquaDefense” by Mapei.
3. Or equal.

C. Transition trim (use between tile and adjacent finish floor): Schluter “Reno T.” In non-reflective stainless steel, or equal.

PART 3 - EXECUTION

3.1 EXAMINATION/PREPARATION

A. Examine conditions and measurements affecting the work of this Section at site.
B. Remove glaze and contaminants, including remaining adhesive and setting bed, from floors by scraping, wire-brushing or with a self-contained beadblasting apparatus.
C. Verify that surfaces to be tiled are firm, dry, clean, and free from oil or waxy films and curing compounds, and within the following tolerances:

1. Thin-set tiles: 1/8 inch in 10 feet for floors and 1/8 inch in 8 feet for walls.
2. Mortar-set tiles: 1/4 inch in 10 feet for floors and 1/4 inch in 8 feet for walls.
3. Maximum deflection of walls to be tiled: L/360 under loads prescribed by Code. Coordinate this requirement with other design criteria specified in Section 09 22 16.

D. Examine that installation of grounds, anchors, recessed frames, electrical and mechanical work, and similar items located in or behind tile have been completed before installing tile.
E. Correct detrimental conditions before proceeding with installation.

3.2 WATERPROOFING MEMBRANE

A. General: Application: Comply with the waterproofing membrane manufacturer’s instructions, ANSI A 108.13, and the following.
B. Surface preparation:

1. Mask adjacent areas not to be waterproofed.
2. Prepare surfaces to be waterproofed so that they are clean, smooth and free of contamination.
3. Repair defects such as honeycombs, rock pockets, cracks, gaps, penetrations and protrusions. Remove glaze from concrete as recommended by the waterproofing manufacturer.
4. Prime/seal concrete and vertical substrates.

C. Apply waterproofing in 2 coats when substrate temperature is above 40-degrees F.
D. Install reinforcing fabric, where recommended by the waterproofing manufacturer, in waterproofing liquid at drains, coves, corners, over cracks and gaps in substrate.

E. Avoid interruptions during installation of membrane; if interrupted, clean interface surfaces to assure adhesion.
F. Completed membrane shall be uniform in thickness and texture, monolithic and waterproof.
G. Keep traffic on completed membrane to a minimum. Cover traffic path until tile is installed.
H. Set tile no sooner than 24 but no more than 72 hours after membrane installation.

3.3 TILE INSTALLATION

A. General: Install proprietary materials in compliance with their manufacturer's instructions. Press or beat the tiles to obtain 100 percent coverage of mortar on back of tile; back butter tile if necessary.

1. Maintain minimum temperature limits and installation practices recommended by waterproofing membrane, mortar and grout materials manufacturers in areas where this work is performed.
2. Terminate work neatly at obstructions, edges and corners without disrupting pattern or joint alignment. Saw-cut and drill tiles to obtain tight fitting, clean, sharp, undamaged cut edges.

   a. Rub cuts smooth with fine abrasive stone.
   b. Cut and drill so that electrical outlets, plumbing fixtures, pipes, fixtures and fittings standard plates, escutcheon and collars will overlap the tile.
   c. Do not cut or split tile at penetrations.

3. Install tile in patterns indicated with uniform joints and perimeter units not less than 1/2 unit wide. Adjust to minimize cutting.
4. Accurately set tile with flush well-fitted joints, finished in true planes, plumb, square, sloped or level as required.
5. Form corners, returns, and exposed tile edges with approved trimmers.
6. Where tiles selected by the Design Consultant are installed in the same plane, but are of a different thickness, it is the Contractor responsibility to adjust the setting bed or mortar thickness so that all tiles are flush.
7. Under no circumstances will glazed tile installations be accepted if any part of unglazed tile body of any unit remains exposed after tile is installed.
8. Provide matching tile trimmers of all types required to prevent such condition.
9. Maximum deviation from true lines and levels shall not exceed 1/8-inch in 10-foot for floors, and 1/8-inch in 8-foot for walls.
10. Calk penetrations in tile with sealant and backing rod specified in Section 07 92 00. Provide expansion joints where indicated or as recommended by TCNA Method EJ171.

B. Tile blending:

1. For tile exhibiting color variations within the ranges selected during sample submittals, verify that tiles have been factory-blended and packaged accordingly so that tiles taken from one package show the same color range as those taken from other packages, and match approved samples.
2. If not factory-blended, either return to manufacturer or blend tiles at Project site before installing.

C. Tile installations:

1. Wall tile: Install over gypsum backer board in compliance with ANSI A108.5 and TCNA installation method W245, modified to be used over waterproofing membrane.
2. Floor tile: Install over waterproof membrane in compliance with ANSI A108.5 and TCNA installation method F122.

D. Sound tile after setting. Replace or reset hollow sounding units.

~~E.Install thresholds as specified for tiles above and in compliance with TCNA installation method TR611.~~

3.4 TRANSITION PIECES

A. Install between tile and adjacent finish material in one piese, level, and asecurely glued to floor. Protect from damage until fully supported by the floor finish materials.

3.5 GROUTING/CURING

A. Grouting: Comply with ANSI A108.10. Finish joints of square edge tiles flush with tile surfaces; finish joints of cushion edge tiles to depth of cushion. Finish grout free of voids and pits.

1. Fill epoxy-filled joints flush with tile edges. The epoxy will cure to a slight depression.

3.6 SEALANTS

A. Comply with sealant manufacturer's instructions and ASTM C 1193.
B. Install backing rod and fill joints completely with sealant tooled below surface of tile. Do not disturb until fully cured.

3.7 FIELD QUALITY CONTROL

A. Plug drains and dam door and other openings after waterproofing is installed and flood the floor with approximately 2-inch of water.

1. Let the water stand undisturbed for 48 hours and check for leaks.
2. Repair discovered leaks and retest; repeat as necessary to stop leaks before proceeding with tile installation

3.8 CLEANING/PROTECTING

A. Cleaning:

1. Clean tile and repair faulty grouting. Sponge and clean surfaces with clean water and soft brushes.
2. Polish glazed tile after cleaning with clean, dry cloths.

B. Protect completed installations until acceptance by the City.
C. Protect floor tiles with reinforced Kraft paper or other heavy covering securely taped in place during the construction period to prevent damage and stains. Remove protection when no longer needed.
D. When recommended by tile manufacturer, apply a coat of neutral protective cleaner to completed tilework.
E. Prohibit foot and wheel traffic from tiled floors for at least 7 days after grouting is completed.
F. Before final inspection, remove protective coverings and rinse neutral cleaner from tile surfaces.
G. Leave finished installation clean and free of cracked, chipped, broken, unbonded, or otherwise defective tiles.

END OF SECTION

SECTION 09 61 05 - WATER VAPOR EMISSION CONTROL SYSTEM

PART 1 - GENERAL

1.1 SUMMARY

A. Section includes coating system for the reduction of moisture vapor transmission and alkalinity control of interior concrete slab-on-grade scheduled to receive carpet and cork floor covering.

1.2 DEFINITION

A. WVRS means Water Vapor Reduction System.

1.3 SUBMITTALS

A. Product Data:

1. Manufacturer's specifications.
2. Installation Instructions.
3. Independent test data.
4. Certification.

B. Warranty form.

C. Test results: Anhydrous calcium chloride test results according to ASTM F 1869 or RH Probe Test according to ASTM F 2170 from independent testing agency.

1.4 QUALITY ASSURANCE

A. Manufacturer qualifications: Firm with not less than 10 years experience in manufacturing water vapor reduction systems.

B. WVRS: The water vapor reduction system must be specifically formulated and marketed for water vapor reduction and alkalinity control. Except for product specified, submit list of product use and performance history listing reference sources for at least 3 projects dating back for a minimum of 5 years.

C. Applicator qualifications: Entity currently approved by the manufacturer, experienced in surface preparation and application of the material and subject to inspection of the manufacturer.

D. Independent testing: Manufacturer must provide Independent lab test reports documenting performance in accordance with the following.

1. ASTM E 96, Water Vapor Transmission (wet method) Performance shall be documented by an independent testing laboratory at a minimum of 97 percent water vapor transmission reduction compared to untreated concrete.
2. ASTM E96- Perm Rating - Standard Test Method for Water Vapor Transmission of Materials – Perm Rate results must not exceed 0.1 perms.
3. ASTM D 1308; Insensitivity to alkaline environment up to, and including, pH 14. A 14-day test is required with no degradation of sample reported.
4. Certify acceptance and exposure to continuous topical water exposure after final cure.

1.5 HANDLING

A. Deliver products to the job site in their original unopened containers, clearly labeled with the manufacturer's name and brand designation.
B. Store products in an approved ventilated dry area; protect from dampness, and direct sun light. Do not store product in areas with temperatures in excess of 90 degrees F or below 50 degrees F.
C. Handle product to prevent breakage of containers and damage products.

1.6 PROJECT/SITE CONDITIONS

A. Environmental conditions:

1. Do not apply WVRS to unprotected surfaces or when water is present on the concrete surface.
2. Do not apply water vapor reduction system when temperature is lower than 50 degrees F or expected to fall below this temperature within 24 hours from time of application.

B. Protection: Protect WVRS from rain and topical water for 24 hours minimum from time of application.

1.7 SCHEDULING

A. After installation of WVRS, the City's testing agency will perform anhydrous calcium chloride testing ASTM F 1869 and RH Probe Tests ASTM F 2170 as outlined In Article 3.1 below.
B. The Inspector will coordinate with the City scheduling water vapor reduction system testing and allowing enough time to test, submit and install the water vapor reduction system before installation of floor finish.
C. The Inspector will allow for as much time as is reasonable for the concrete slab to dry before installing anhydrous calcium chloride tests and/or RH Probe Tests. Remove mastics, glues, and/or contaminants to provide a clean, sound, concrete substrate prior to installing anhydrous calcium chloride tests as per ASTM F 1869.
D. The WVRS selected must allow installation as early as 7 days after concrete placement.

1.8 SPECIAL WARRANTY

A. Provide manufacturer's warranty against defects in materials and workmanship for 10 years from Substantial Completion.
B. Correct failures during the warranty period at no cost to The City.

PART 2 - PRODUCTS

2.1 MANUFACTURERS/SYSTEMS/MATERIALS

A. WVRS: One of the following by KOSTER American Corp., or equal.

1. VAP I® 2000 System.
2. VAP I 2000 FS (use for accelerated cure time)

B. KOSTER VAP I® Level Pro Self Leveling Underlayment.
C. KOSTER VAP I® Level Pro Finish.
D. KOSTER VAP I® 06 Primer.

2.2 MATERIALS PHYSICAL CHARACTERISTICS

A. Composition: One hundred percent solids epoxy coating, single coat, stand alone system without additional components such as sand broadcast for adhesion of flooring systems.

1. Minimum 97 percent water vapor transmission reduction compared to untreated concrete, ASTM E 96, Water Vapor Transmission (wet methods).
2. Not exceeding one perm rating, ASTM E 96 Perm Rating.
3. Insensitivity to alkaline environment up to, and including, pH 14 in a 14-day bath test, ASTM D 1308.
4. Certified acceptance and exposure to continuous topical water exposure after final cure.
5. Reduce calcium chloride readings by 97 percent in one coat up to 25lbs/1000 ft2/24 hrs.
6. Perform as required with RH Probe readings of 100 percent.

PART 3 - EXECUTION

3.1 EXAMINATION & PREPARATION

A. Calcium Chloride or RH Probe test requirements:

1. Conduct anhydrous calcium chloride tests according ASTM F 1869 protocol.
2. Provide RH Probe Tests according to ASTM F 2170 protocol.
3. Only conduct calcium chloride tests at the same temperature and humidity expected during normal use. If this is not possible, then the test conditions shall be 75 degrees F plus or minus 10 degrees F and 50 plus or minus 10 percent relative humidity. Maintain these conditions 48 hours prior to and during testing. Water vapor transmission levels are directly affected by ambient room temperature and readings conducted without a sustained ambient temperature are not acceptable.
4. Submit test results with a marked-up floor finish plan showing test results along with a written clarification on status of the ambient air temperature and humidity before start of testing.

B. Concrete slab inspection:

1. Test existing slabs for deficiencies and contaminates such as un-reacted water-soluble silicates, chlorides, ASR (alkali-silica reaction), to avoid bonding issues. This testing shall be performed by The City's independent testing agency using standard coring methods and review of the history of the slab installation if available. Concrete shall conform to ACI Committee 201 Report "Guide to Durable Concrete."

C. Floor treatment calcium chloride tests: After proper cure (>72 hrs minimum) of the WVRS, conduct calcium chloride tests to determine if the level of water vapor transmission and alkalinity are reduced to the City's specified levels in conjunction with the flooring manufacturers' installation requirements.

D. Adhesion tests: Verify proper adhesion of flooring adhesives, coatings, and leveling compounds to the final vapor reduction coating system for acceptability.

3.2 PREPARATION

A. Inspect surfaces for suitability to receive WVRS with the WVRS manufacturer's representative.
B. Clean surfaces to receive WVRS as follows.
C. Shot blast floors to a Concrete Surface Profile (CSP) #3 or #4 and clean surfaces with an industrial vacuum cleaner to remove residues from the substrate.

D. Grinding is allowed only in areas not accessible by shot blasting.
E. Remove defective materials and foreign matter, such as dust, adhesives, leveling compounds, paint, dirt, floor hardeners, bond breakers, oil, grease, curing agents, form release agents, efflorescence, laitance, shot blast BBs.
F. Repair cracks, joints, and open surface honeycombs and fill in accordance with WVRS manufacturer's recommendations.
G. If concrete additives such as chlorides or other soluble compounds that may contaminate surfaces were used in the concrete mix, do not use the WVRS without written approval from the WVRS manufacturer.
H. Provide an uncontaminated, sound surface. DO NOT ACID-ETCH.
I. Repair concrete prior to WVRS installation by using system manufacturer-recommended bonding agent with approved concrete repair materials. Comply with all requirements as listed in vapor reduction manufacturer's technical data information.
J. Ensure that surfaces to be treated with WVRS have not previously been treated with other materials such as underlayment, screeds, penetrating sealants, or silicates. If this is the case, consult with the manufacturer prior to application of WVRS.
K. Test for concrete deficiencies or contamination such as alkali silica reaction, untreated silicates, or organic residue.
L. Shot blast a small test area and inspect surface profile with the finished flooring applicator.

3.3 APPLICATION

A. Comply with the WVRS manufacturer's instructions and the following.
B. Install a feather finish or leveling material to "flatten" or level the vapor reduction-treated concrete prior to flooring installation so flooring meets ACI Ff 38 and Fl 25 with no minimum local values of Ff 19 and Fl 13 measured within 24 hours according to ASTM E 1155.
C. Prime surfaces to receive WVRS.
D. Coverage rates depend on the surface profile and porosity of the concrete substrate as well as the measured level of moisture. On average, a coverage rate of 75-150 ft2/gal is required.
E. Apply WVRS in one coat, using a squeegee, a 3/8 inch nap roller, or both, leaving no areas untreated. Allow to cure a minimum of 12 hours before installing flooring system.

3.4 FIELD QUALITY CONTROL

A. Verify water vapor reduction by anhydrous calcium chloride testing prior to proceeding with floor covering installation. Correct areas which indicate unacceptable water vapor transmission and pH.

3.5 PROTECTION

A. Protect WVRS during specified cure period from traffic, topical water and contaminants.

END SECTION

SECTION 09 67 70 - INTERIOR CONCRETE FLOOR SEALER

PART 1 - GENERAL

1.1 SUMMARY

A. Section includes clear concrete sealer on all exposed and concealed ~~surfaces of the~~ interior concrete floors, except for the following:

1. Where waterproof membrane is specified under ceramic floor tile.
2. Where water vapor emission control system is specified under cork and carpet flooring ~~indicated~~.

B. Related requirements: Division 01 for LEED requirements.

1.2 SUSTAINABLE DESIGN REFERENCE

A. USG Green Building Council (USGBC).

1.3 ADMINISTRATIVE REQUIREMENTS

A. Pre-installation meeting:

1. Prior to start of installation, arrange a pre-installation meeting between the sealer manufacturer, the applicator, and related trades whose work will be in contact with the treated surface, including but not limited to those for colored concrete and joint sealers.
2. Record minutes of the meeting, file in the Project file, and send a copy to the Design Consultant.

B. Coordination:

1.4 SUBMITTALS

A. Data: Manufacturer product data of the proposed sealer, including recommended coverage rates, include material test reports indicating and interpreting test results for compliance of water-repellent sealer with criteria specified.

B. Manufacturer certification:

1. Letter from the sealer manufacturer to verify its acceptance of the applicator, acceptance of substrates as satisfactory to receive the specified sealer, and affidavit that sealer is compatible with concrete curing agent used.
2. Duplicate copies of manufacturer affidavit with each shipment of materials delivered to the jobsite certifying that material furnished complies with specified requirements.

C. LEED: LEED certification product data as specified in Section 01 81 13, “sustainable design requirements”, for the following LEED credits:

1. Credit MR 4.1 & 4.2, Recycled Content.
2. Credit MR 5.1, Regional Materials, Manufactured Locally.
3. Credit MR 5.2, Regional Materials, Harvested / Extracted Locally.
4. Credit MR 6, Rapidly Renewable Materials.
5. Credit EQ 4.1, Low Emitting Materials, Paints.

1.5 QUALITY ASSURANCE

A. Installer qualifications: Firm with a minimum of 3 consecutive years of experience in application of the sealer proposed for use, or similar sealers, on projects of similar size and scope, and licensed or approved in writing by the sealer manufacturer.
B. Sample panels: When requested by the sealer manufacturer, or necessary to adjust sealer formulation, provide sealer manufacturer with sufficient samples of substrate to be coated to determine exact formulation and coverage rates.
C. Manufacturer inspections:

1. Obtain materials only from manufacturer who will send a qualified technical representative to the Project site before start of this work to verify substrate acceptability. Schedule subsequent visits as required thereafter to review installation procedures and completed work, and to issue warranty specified.
2. Unsatisfactory conditions disclosed by the manufacturer visits to the site shall be promptly and satisfactorily repaired and the areas re-inspected by the manufacturer before work starts or resumes in affected areas.

D. Pre-installation testing:

1. Test sample panel in accordance with ASTM E 514, modified for field use.
2. Report results of tests and apply additional sealer, when appearance is unchanged, or re-formulate and re-apply sealer, when test results are not satisfactory.

1.6 JOB CONDITIONS

A. Comply with manufacturer's recommendations regarding environmental requirements, and temperature and conditions of surfaces to receive sealer.

1.7 WARRANTY

A. Warrant sealer against water penetration through treated surfaces, peeling, cracking, discoloration and other defects of the sealer, caused by faulty materials and workmanship, for 5 years after Substantial Completion.
B. The warranty shall include repair of defects and failures in the sealer during the warranty period, at no cost to the City.

PART 2 - PRODUCTS

2.1 SEALER/MANUFACTURER

A. Basis of design is "Consolidek LS" by ProSoCo., or equal by one of the following:

1. Harris Specialty Chemicals, Inc. (Hydrozo).
2. L&M Construction Chemicals, Inc.
3. Pecora Corp.
4. Sivento.
5. Sonneborn.
6. Or equal.

2.2 PERFORMANCE REQUIREMENTS

A. Provide sealer with the following properties based on testing manufacturer standard products, according to test methods indicated, applied to substrates simulating Project conditions using same materials and application methods to be used for Project.

1. Absorption: Minimum 90 percent reduction of absorption after 24 hours in comparison of treated and untreated specimens for hardened concrete: ASTM C 642.
2. Water-vapor transmission: Maximum 10 percent reduction in rate of vapor transmission in comparison of treated and untreated specimens, ASTM E 96.
3. Durability: Maximum 5 percent loss of water repellency after 2500 hours of weathering in comparison to specimens before weathering, ASTM G 53.
4. Permeability: Minimum 80 percent breathable in comparison of treated and untreated specimens, ASTM D 1653.

B. Appearance: When compared visually to an untreated sample under same lighting conditions, the sealer shall not change the color and sheen of the coated substrate, and shall be invisible after application and over the life of the building.

PART 3 - EXECUTION

3.1 EXAMINATION

A. Provide services of a factory-authorized technical service representative, from the sealer manufacturer, to inspect and approve the substrates before application and to instruct the applicator on the product and application method to be used.
B. Verify that slabs to be sealed are clean, dry and free of dust, dirt, oil, grease and other foreign material that would affect the application and performance of the sealer.
C. Correct detrimental conditions before proceeding with installation.

3.2 PROTECTING

A. Protect adjacent work, including sealant bond surfaces, from spillage or blow-over of sealer.

3.3 PHASING

A. Where feasible delay sealer application until installation of sealants is complete in joints adjoining surfaces to be coated.
B. Sealer work may precede sealant application only if sealant adhesion and compatibility have been tested and verified using substrate, sealer, and sealant materials identical to those used in the Work.

3.4 APPLICATION

A. Test application:

1. Before performing this work, including bulk purchase and delivery of products, prepare a small application in an unobtrusive location and in a manner approved by Design Consultant to demonstrate the final effect (visual, physical, and chemical) of planned application.
2. Proceed with work only after Design Consultant review of test application.

B. Sealer shall be applied by manufacturer-approved applicators using recommended methods and equipment.
C. Do not exceed the application rate recommended by the manufacturer.
D. Topcoat (LSGuard):

1. Uniformly spread the product in a thin layer using a microfiber pad pre-moistened with sealer prior to use. Do not allow product to dry prior to spreading.
2. Allow to dry tack free (20 to 60 minutes).
3. Once dry, burnish to a high gloss finish using high-speed burnishing equipment and a high-speed burnishing pad designed for use on a high-gloss finish. Additional coats may be applied and burnished depending upon concrete porosity and desired finish.

3.5 FIELD QUALITY CONTROL

A. The City may employ a testing agency to test the in-place sealer in compliance with standards specified.
B. The City will pay cost of test, except when test discloses that the sealer tested does not comply with these Specifications; the Contractor shall pay subsequent retests until application meets Specifications requirements.
C. In the event test shows that the sealer is deficient, apply additional sealer.
D. Repetition of the above procedure on all previously treated surfaces will be at Contractor's expense.

3.6 CLEANING

A. Clean sealer from adjacent surfaces immediately after spillage.
B. Comply with manufacturer’s recommendations for cleaning.

END OF SECTION

SECTION 09 68 13 - CARPET TILE

PART 1 - GENERAL

1.1 SUMMARY

A. Section includes:

1. Furnishing carpet tile for installation over access flooring.
2. Furnishing and installing carpet tile where indicated on the Drawings.
3. Adhesive.
4. Accessories.

B. Related requirements: Division 01 for LEED requirements.

1.2 SUSTAINABLE DESIGN REFERENCE

A. USG Green Building Council (USGBC).

1.3 SUBMITTALS

A. Samples:

1. Full size samples of carpet tile.
2. Twelve-inch long samples of carpet edge guard profile.

B. Layout drawings: Three-eight-inch minimum layout drawings showing tile layout, pattern direction, if any, and pile direction.

C. Tests: Results of test conducted on concrete (refer to Part 3 below) slabs prior to start of installation.

D. Data:

1. Copies of manufacturer's recommended cleaning and maintenance instructions for carpet.
2. Manufacturer product data for carpet, adhesive and accessories.
3. Evidence that the carpet, accessories and adhesives to be used comply with Code requirements for combustibility, flammability and toxicity.

E. LEED: LEED certification product data as specified in Section 01 81 13, "Sustainable Design Requirements", for the following LEED credits:

1. Credit MR 4.1 & 4.2, Recycled Content.
2. Credit MR 5.1, Regional Materials, Manufactured Locally.
3. Credit MR 5.2, Regional Materials, Harvested / Extracted Locally.
4. Credit MR 6, Rapidly Renewable Materials.
5. Credit EQ 4.1, Low Emitting Materials, Adhesives & Sealants.
6. Credit EQ 4.1, Low Emitting Materials, Carpet.

F. Manufacturer warranties: Published warranties as specified below.

1.4 QUALITY ASSURANCE

A. Installer qualifications: FCIB or IFCI certified carpet installers, unless otherwise acceptable to the Design Consultant.
B. Pre-installation conference:

1. Prior to start of installation, arrange a pre-installation meeting between the carpet installer, Contractor, Design Consultant and electrical trade responsible for wire access, where applicable.
2. Mark chalk lines on the slab, showing pattern alignment for placement of seams and pattern layout. Spray lacquer on chalk lines, after Design Consultant has approved the locations.

    a. The permanent lacquered chalk lines will be used as the approved seam locations for carpet.

1.5 HANDLING

A. Procedure: In accordance with CRI 104 Section 5. Store carpet indoors in a protected location.
B. Delivery: Deliver carpet with manufacturer registry number attached and intact.
C. Storage: Sore carpet bins to prevent pile crush. Temporary storage shall be in flat bins with a maximum height not to exceed 3 rolls.
D. Handling:

1. Transport carpet on flat dollies equipped with carpet cradles. Equip fork lifts with booms.
2. Bending or folding of individual carpet rolls is not recommended, however, if it is absolutely necessary for delivery purposes, under no circumstances shall carpet be left bent or folded for longer than 4 hours.

E. Conditioning:

1. Condition carpet and adhesive on site in a heated, dry space at a minimum temperature of 65-degree and a relative humidity between 10 percent and 65 percent for at least 48 hours before installation.
2. Maintain these conditions night and day during installation and for at least 72 hours after completion.

1.6 JOB CONDITIONS

A. Temperature: Maintain a uniform temperature, in the space being carpeted, in the range of 65 to 75 degrees F during and after carpet installation.
B. Lighting: Illuminate work areas during installation to provide the same or greater level of illumination required to properly perform the work and as will occur in the room or space after the building is in operation.
C. Ventilation:

1. Maintain fresh air ventilation in installation spaces in accordance with current guidelines of ASHRAE standard 62 published by American Society of Heating, Refrigerating and Air Conditioning Engineers.

2. During installation, maintain fresh air ventilation by utilizing exhaust fans, and by operating the ventilation system at full capacity. Exhaust air to the outside and avoid recirculation of air.
3. After installation, maintain fresh air ventilation for 48-72 hours at normal room temperatures by operating ventilation or exhaust fan system at full capacity. Open doors and windows, if possible to dissipate, and eliminate lingering odors from the installation.

1.7 WARRANTIES

A. Carpet manufacturer shall warrant the carpet as follows:

1. The life of the carpet shall be 15 years under normal conditions.
2. Primary and secondary backing shall not delaminate for the life of the carpet.
3. Twenty-pound tuft-bind, wet and dry, shall be warranted for the life of carpet.
4. Stain resistant properties shall be permanent and inherent in the fiber. Topically applied stain resistant treatments are not acceptable. Stain resistant properties shall not be removed by commercial cleanings and abrasive wear.
5. Carpet shall be warranted to be impervious to water damage.
6. There shall be no more than 10 percent face yarn loss for the life of the carpet.

1.8 MAINTENANCE

A. Furnish the following full-size units equal to 2 percent of amount installed for each type indicated, but not less than 2 full boxes.

PART 2 - PRODUCTS

2.1 MANUFACTURERS

A. Interface.
B. Or equal.

2.2 CARPET TILE

A. Interface FLOR 24-inch squares.
B. Style:."House Pet."
C. Colors: Up to 4 colors ~~TBD~~As selected by the Design Consultant from the manufacturer full palette.

2.3 CARPET ACCESSORIES AND INSTALLATION MATERIALS

A. Binder bars and edge strips: Designed specifically for conditions of use. The Design Consultant will select Color(s).
B. Adhesives: Premium quality pressure-sensitive, type approved by carpet tile manufacturer for conditions of use.
C. Edge sealer: USG Durabond Carpet Square Adhesive D2, WW Henry Peach Glue, 3M Blue Glue, or equal adhesive formulated for heavy commercial approved by the carpet manufacturer.

D. Floor leveling material:

1. Provide a minimum of one 10 lbs. bag of Portland cement-based floor prep material for every 100 square yard of carpet to be installed.
2. Do not use gypsum-based materials.

E. Other miscellaneous materials: As recommended by the carpet manufacturer for the conditions of installation and use.

PART 3 - EXECUTION

3.1 EXAMINATION/PREPARATION

A. Comply with the applicable specifications and recommendations of the Carpet and Rug Institute (CRI), Standard for Installation of Textile Floor covering Materials CRI 104, except as noted.
B. Vacuum substrate immediately prior to carpeting and remove deleterious substances, which would interfere with the installation or be harmful to this work.
C. Prepare concrete surfaces in accordance with CRI 104 Section 6.1.1 and 6.2.
D. Check floors for moisture content. Be sure that they are sufficiently dry to receive carpet by testing in compliance with ASTM D 4263. Allow sufficient time in the construction schedule to allow slabs to dry sufficiently, force dry slabs, or provide a compatible surface coating so that water vapor emission will be at a level acceptable to the floor-covering manufacturer.
E. Test the alkalinity level of the concrete using a Litmus test. If the pH is above a level unacceptable to the adhesive manufacturer, treat the surface so that the floor PH is within acceptable levels.
F. Remove dirt, oil, grease, or other foreign matter from surfaces to be carpeted and/or to receive floor filler.
G. Use a floor filler, recommended by the carpet manufacturer, to fill-in cracks, holes and other indentation marks; grind down bumps to flat surface. Floor under carpet shall not exceed an Ff of 25.
H. Correct other detrimental conditions before starting installation.

3.2 INSTALLATION

A. General:

1. Comply with the carpet manufacturer's instructions and recommendations, except as modified herein.
2. Align carpet with centerline of room or space, and adjust at edges for wall variations.
3. Dry lay carpet in one room before going further to verify side match, dye sequence, pattern and defects. Obtain Design Consultant’s approval of dry lay before installing the remainder of carpet tile.
4. Install carpet edge guard, where edge of carpet is exposed to traffic, in single length without joints except at changes in direction. Cut for a tight fit against abutting surfaces. Center under doors when applicable.
5. Extend carpet at the following locations:

a. Under open-bottomed and raised bottomed obstructions, and under removable flanges of obstructions.

b. Into closets and alcoves of spaces scheduled to be carpeted, unless another floor finish is indicated for such space.
c. Under movable furniture and equipment.

6. Install carpet in one direction in each room and do not reverse direction at any locations.
7. Carpet shall have full adhesion to subfloor without loose edges.

B. Carpet tile installation:

1. Install in accordance with CRI 104 Section 14 and the following.
2. Terminate work neatly at obstructions, edges and corners without disrupting pattern or joint alignment. Cut tiles to obtain clean, sharp edges.
3. Install tile by the stair step method in full bed of adhesive, with tight joints and perimeter units not less than 1/2 tile wide. Adjust to minimize cutting.
4. Install tiles so that the arrows on the back point in the same direction.
5. Fit tiles snugly to prevent gaps, but do not force into place so as to cause buckles. Align tiles to avoid trapping pile yarns in the joint.
6. Roll completed installation with a 35 to 75 lb. linoleum roller in both directions to ensure uniform bond everywhere.
7. Installation tolerance: Comply with appropriate Sections of CRI 104.

3.3 CLEANING/PROTECTING

A. Remove debris from installation, carefully sorting pieces to be saved from scraps to be disposed of.
B. Vacuum carpet with a commercial machine, with a rotating agitator or beater in the nozzle. Remove soiled spots.
C. Close areas to traffic during installation. Cover carpet in traffic areas with protective non-staining building paper. Do not use plastic sheeting.
D. Prior to acceptance of the Work, replace damaged and stained carpet with new carpet.

END OF SECTION

SECTION 09 69 00 - ACCESS FLOORING

PART 1 - GENERAL

1.1 SUMMARY

A. Section includes:

1. Access flooring system consisting of concrete-filled, formed-steel panels on pedestals with stringers.
2. Floor panel coverings.

B. Related requirements:

1. Division 01 for the following:

   a. LEED requirements.
   b. Allowances for cutouts and service outlets.
   c. Unit prices for cutouts and service outlets.
   d. Alternate floor covering.

2. Division 08 for overhead coiling door terminating on access floor.
3. Division 09 for the following:

   a. Concrete floor sealer.
   b. Cork tiles and carpet tiles applied over access flooring panels.

4. Division 12 for walk-off mats on access flooring.
5. Division 23 for pressure testing of underfloor plenum.
6. Division 23 for variable-air-volume diffusers.
7. Division 26 for connection to ground of access flooring understructure.
8. Division 26 for coordination with understructure.
9. Division 27 for voice and data cabling for service outlets and for coordination with understructure pedestals.

C. Quantity allowances: Provide the following as specified in Division 01 Section "Allowances."

1. Cutouts in floor panels.
2. Service outlets.

1.2 UNIT PRICES

A. Unit prices: The Contract Sum will be adjusted for changes in quantity from that indicated in allowances for cutouts in floor panels and service outlets based on amounts stipulated in the Form of Agreement and complying with Division 01 Section "Unit Prices." Changes to quantities and to the Contract Sum will be made by Change Order.

1.3 SUSTAINABLE DESIGN REFERENCE

A. USG Green Building Council (USGBC).

1.4 SUBMITTALS

A. Product Data: For each type of product indicated.

B. Shop Drawings: Include layout of access flooring system and relationship to adjoining Work based on field-verified dimensions, including walk-off mats installed on access flooring.

1. Details and sections with descriptive notes indicating materials, finishes, fasteners, typical and special edge conditions, accessories, understructure, and assemblies interfacing with access flooring.
2. For installed products indicated to comply with design loads, include structural analysis data signed and sealed by the qualified professional engineer responsible for their preparation.

C. Samples:

1. Resilient accessories: Manufacturer's standard accessories but not less than 12 inches long.
2. Exposed Metal Accessories: 12 inches long.
3. One complete full-size floor panel, pedestal, and understructure unit for each type of access flooring system required.

D. Product certificates: For each type of access flooring system, signed by product manufacturer.
E. Qualification data: For Installer.
F. Product test reports: Based on evaluation of comprehensive tests performed by a qualified testing agency, or performed by access flooring manufacturer and witnessed by a qualified testing agency, for each type of flooring material and exposed finish.
G. LEED: LEED certification product data as specified in Section 01 81 13, “Sustainable Design Requirements”, for the following LEED credits:

1. Credit MR 4.1 & 4.2, Recycled Content.
2. Credit MR 5.1, Regional Materials, Manufactured Locally.
3. Credit MR 5.2, Regional Materials, Harvested / Extracted Locally.
4. Credit MR 6, Rapidly Renewable Materials.
5. Credit EQ 4.1, Low Emitting Materials, Adhesives & Sealants.
6. Credit EQ 4.1, Low Emitting Materials, Paints.

1.5 QUALITY ASSURANCE

A. Manufacturer qualifications: ISO9001:2000-certified, demonstrating it has a robust and well-documented quality management system with continuous improvement goals and strategies.
B. Manufacturer facilities: ISO1400:2004-certified, demonstrating regular maintenance of an environmental management system.
C. Installer Qualifications: An employer of workers trained and approved by manufacturer.
D. Source Limitations: Obtain access flooring system through one source from a single manufacturer.
E. Regulatory Requirements: Fabricate and install access flooring to comply with NFPA 75 requirements for raised flooring.
F. Provide floor panels that are clearly and permanently marked on their underside with panel type and concentrated-load rating.
G. Mockup: Build mockup to verify selections made under sample submittals and to demonstrate aesthetic effects and set quality standards for materials and execution.

1. Build mockup of typical access flooring assembly as shown on Drawing. Size to ~~be an area~~ include no less than 5 floor panels in length by 5 floor panels in width.
2. Approved mockup may become part of the completed Work if undisturbed at time of Substantial Completion.

H. Preinstallation Conference: Conduct conference at Project site. ~~to comply with requirements in Division 01 Section "Project Management and Coordination."~~

1. Review connection with mechanical and electrical systems.
2. Review and finalize construction schedule and verify availability of materials, Installer's personnel, equipment, and facilities needed to make progress and avoid delays.

1.6 PROJECT CONDITIONS

A. Environmental Limitations: Do not install access flooring until spaces are enclosed, subfloor has been sealed, ambient temperature is between 40 and 90 deg F, and relative humidity is not more than 70 percent.

1.7 COORDINATION

A. Coordinate location of mechanical and electrical work in underfloor cavity to prevent interference with access flooring pedestals.
B. Mark pedestal locations on subfloor by use of a grid, with a module equal to width of five floor panels in both directions, to enable mechanical and electrical work to proceed without interfering with access flooring pedestals.
C. Proceed with installation only after completion of other construction within affected spaces.

1.8 EXTRA MATERIALS

A. Furnish extra materials described in subparagraphs below that match products installed and that are packaged with protective coverings for storage and identified with labels describing contents.

1. Flooring Panels: ~~TBD~~4.
2. Pedestals: ~~TBD~~ 8.
3. Stringers: ~~TBD~~4.

PART 2 - PRODUCTS

2.1 MANUFACTURERS

A. Tate Access Floors, Inc.
B. Or equal.

2.2 ACCESS FLOORING

A. Tate Concore system 1500, or equal.
B. Floor Panels:

1. Configuration: One person, using a portable lifting device, can interchange with other field panels without disturbing adjacent panels or understructure:
2. Die-cut flat steel top sheet and bottom, die-formed and stiffened to form an enclosed assembly. Fully grout internal spaces of completed units with manufacturer's standard cementitious fill.
3. Nominal Panel Size: As indicated on the Drawings.
4. Fabrication Tolerances: Fabricate panels to the following tolerances with squareness tolerances expressed as the difference between diagonal measurements from corner to corner:

a. Size and Squareness: Plus or minus 0.015 inch of required size, with a squareness tolerance of plus or minus 0.015 inch, unless tolerances are otherwise indicated for a specific panel type.
b. Flatness: Plus or minus 0.020 inch, measured on a diagonal on top of panel.

5. Panel Attachment to Understructure: By bolting to pedestal head. Provide panels with holes drilled in corners to align precisely with threaded holes in pedestal heads and to accept countersunk screws with heads flush with top of panel.

C. Pedestals: Assembly consisting of base, column with provisions for height adjustment, and head (cap); made of steel.

1. Provide pedestals designed for use in seismic applications.
2. Base: Square or circular base with not less than 16 sq.-inch of bearing area.
3. Column: Of height required to bring finished floor to elevations indicated. Weld to base plate.
4. Provide vibration-proof leveling mechanism for making and holding fine adjustments in height over a range of not less than 2 inches and for locking at a selected height, so deliberate action is required to change height setting and vibratory displacement is prevented.
5. Head: Designed to support understructure system indicated.

a. Provide sound-deadening pads or gaskets at contact points between heads and panels.
b. Provide head with four holes aligned with holes in floor panels for bolting of panels to pedestals.

D. Stringer Systems: Modular steel stringer systems made to interlock with pedestal heads and form a grid pattern placing stringers under each edge of each floor panel and a pedestal under each corner of each floor panel. Protect steel components with manufacturer's standard galvanized or corrosion-resistant paint finish.

1. Bolted Stringers: System of main and cross stringers connected to pedestals with threaded fasteners accessible from above.
2. Provide continuous gasket at contact surfaces between panel and stringers to deaden sound, to seal off underfloor cavity from above, and to maintain panel alignment and position.
3. Provide stringers that support each edge of each panel where required to meet design-load criteria.

2.3 FLOOR PANEL FINISHES

A. Exposed steel surfaces: Manufacturer's standard corrosion-resistant finish.
B. Applied floor covering: **[including perforated panels]**.

1. Carpet tile adhesively bonded to top surface of panel: As specified in Section 09 68 13.
2. Cork tile adhesively bonded to top surface of panels: As specified in Section 09 62 29.

C. Resilient Wall Base: As specified in Section 09 65 10.

2.4 ACCESSORIES

A. Post-Installed Anchors: For anchoring pedestal bases to subfloor, provide **[2] [4]** post-installed **[expansion anchors]** [threaded concrete screws] made from carbon-steel components, zinc plated to comply with ASTM B 633, Class Fe/Zn 5 (5 microns) for Class SC 1 service condition (mild), with the capability to sustain, without failure, a load equal to 1.5 times the loads imposed

by pedestal overturning moment on fasteners, as determined by testing per ASTM E 488, conducted by a qualified independent testing agency.

B. Cutouts: Provide cutouts in floor panels for cable penetrations and service outlets. Provide reinforcement or additional support, if needed, to make panels with cutouts comply with standard performance requirements.

1. Number, Size, Shape, and Location: As indicated on the Drawings~~To be determined~~.
2. Fit cutouts with manufacturer's standard grommets in sizes indicated or, if size of cutouts exceeds maximum grommet size available, trim edge of cutouts with manufacturer's standard plastic molding having tapered top flange. Furnish removable covers for grommets.
3. Provide foam-rubber pads for sealing annular space formed in cutouts by cables.

C. Service Outlets:

1. Standard UL-listed and -labeled assemblies, for recessed mounting flush with top of floor panels, for power, communication, and signal services, and complying with the following requirements:
2. Structural Performance: Cover capable of supporting a 1000-lbf concentrated load.
3. Cover and Box Type: Hinged polycarbonate cover with opening for passage of cables when cover is closed and including frame and steel box or formed-steel plate for mounting electrical receptacles.
4. Location: In center of panel quadrant, unless otherwise indicated.
5. Receptacles and Wiring: Electrical receptacles and wiring for service outlets are specified in Division 26 Sections.

D. Diffusers: Manufacturer's standard round diffusers, designed to produce a removable one-piece unit complete with diffuser, manually adjustable flow regulator, dirt and dust receptacle, trim ring, and underfloor compression mounting ring; precisely fitted in factory-prepared openings of standard field panels.

E. Floor Grilles: Standard load-bearing grilles, removable one-piece unit precisely fitted in factory-prepared openings of standard field panels, with adjustable/removable dampers.

F. Cavity Dividers: Provide manufacturer's standard metal dividers located where indicated to divide underfloor cavities.

G. Vertical Closures (Fasciae): Where underfloor cavity is not enclosed by abutting walls or other construction, provide metal-closure plates with manufacturer's standard finish.

H. Perimeter Support: Where indicated, provide manufacturer's standard method for supporting panel edge and forming transition between access flooring and adjoining floor coverings at same level as access flooring.

I. Panel Lifting Device: Manufacturer's standard portable lifting device of type required for specified panels. Provide one lifting devices per room of each type required.

J. Electrostatic discharge: To be determined.

PART 3 - EXECUTION

3.1 EXAMINATION

A. Examine substrates, with installer and manufacturer's representative present, for compliance with requirements for installation tolerances and other conditions affecting performance of work.

1. Verify that substrates comply with tolerances and other requirements specified in other Sections and that substrates are free of cracks, ridges, depressions, scale, foreign deposits, and debris that might interfere with post-installed anchor attachment of pedestals.
2. Proceed with installation only after unsatisfactory conditions have been corrected.

3.2 PREPARATION

A. Lay out floor panel installation to keep the number of cut panels at floor perimeter to a minimum. Avoid using panels cut to less than 6 inches.
B. Locate each pedestal, complete any necessary subfloor preparation, and vacuum clean subfloor to remove dust, dirt, and construction debris before beginning installation.

3.3 INSTALLATION

A. Install access flooring system and accessories under supervision of access flooring manufacturer's authorized representative to produce a rigid, firm installation that complies with performance requirements and is free of instability, rocking, rattles, and squeaks.
B. Attach pedestals to subfloor with post-installed mechanical anchors.
C. Adjust pedestals to permit top of installed panels to be set flat, level, and to proper height.
D. Secure stringers to pedestal heads according to access flooring manufacturer's instructions.
E. Install flooring panels securely in place, properly seated with panel edges flush. Do not force panels into place.

    1. Carpeted Panels: Install panels with carpet pile in same direction.
    2. Cork over panels: For cork-covered panels exhibiting color variations, blend and arrange panels so that installed units show no extreme color variations in any area.

F. Scribe perimeter panels to provide a close fit with adjoining construction with no voids greater than 1/8 inch where panels abut vertical surfaces.
G. Cut and trim access flooring and perform other dirt-or-debris-producing activities at a remote location or as required to prevent contamination of subfloor under access flooring already installed.
H. Ground flooring system as recommended by manufacturer and as needed to comply with performance requirements for electrical resistance of floor coverings.
I. Scribe and install underfloor-cavity dividers to closely fit against subfloor surfaces, and seal with mastic.
J. Scribe vertical closures to closely fit against subfloor and adjacent finished-floor surfaces. Set in mastic and seal to maintain plenum effect within underfloor cavity.
K. Clean dust, dirt, and construction debris caused by floor installation, and vacuum subfloor area, as installation of floor panels proceeds.
L. Seal underfloor air cavities at construction seams, penetrations, and perimeter to control air leakage as recommended in writing by manufacturer.
M. Install access flooring without change in elevation between adjacent panels and within the following tolerances:

    1. Plus or minus 1/16 inch in any 10-foot distance.
    2. Plus or minus 1/8 inch from a level plane over entire access flooring area.

3.4 ADJUSTING, CLEANING, AND PROTECTING

A. After completing installation, vacuum clean access flooring and cover with continuous sheets of reinforced paper or plastic. Maintain protective covering until time of Substantial Completion.
B. Replace access flooring panels that are stained, scratched, or otherwise damaged or that do not comply with specified requirements.

END OF SECTION

SECTION 09 72 20 PRESENTATION DRY ERASE WALL COVERING

PART 1 - GENERAL

1.1 SUMMARY

A. Section includes scrim-backed dry erase wall covering.

1.2 REFERENCES

A. American Society for Testing and Materials (ASTM):

1. E 84: Test Method for Surface Burning Characteristics of Building Materials.
2. D751: Methods of Testing Coated Fabrics.

B. Underwriters Laboratory, Inc. (UL): UL 723: Test for Surface Burning Characteristics of Building Materials.

1.3 SUBMITTALS

A. Data: Submit Product Data and installation instructions for wallcovering, and adhesive, and product data indicating compliance with specified materials required.
B. Samples: Submit manufacturer's standard size sample of the wall covering, and minimum 12-inch samples of each type of aluminum accessory. Approved samples will serve as Design Consultant's control samples.

1.4 QUALITY ASSURANCE

A. Applicator's qualifications: Skilled commercial wallcovering applicators with no less than 3 years of documented experience installing dry erase wallcovering of the types and extent required.
B. Fire hazard classification: Provide materials that comply with Class-A fire rating when tested in accordance with ASTM E 84. Identify components with markings from testing and inspection organization.

1.5 HANDLING

A. Deliver wall coverings to the Project site in unbroken and undamaged original factory wrappings and clearly labeled with the manufacturer's identification label, quality or grade, and lot number.
B. Store in a clean, dry storage area with temperature maintained above 55 deg. with normal humidity, in a flat position to prevent damage to roll-ends. Do not cross-stack material. Support material off the floor to prevent sagging and warping.

1.6 PROJECT CONDITIONS

A. Comply with wall covering manufacturer's instructions for temperature and humidity limitations in spaces, and for substrates to receive wall covering.
B. Illuminate work areas during installation to provide the same or greater level of illumination required to properly perform the work, and as will occur in the room or space after the building is in operation.
C. Provide continuous ventilation during installation and for not less than the time recommended by the wall covering manufacturer for full drying or curing.

1.7 WARRANTY

A. Submit manufacturer's limited 5-year written warranty against manufacturing defects.

1.8 MAINTENANCE

A. Maintenance instructions: Include precautions against cleaning materials and methods that may be detrimental to finishes and performance.

PART 2 - PRODUCTS

2.1 MANUFACTURERS

A. Wall-talkers Wall-coverings by Koroseal Wallcovering West, Inc. (basis of design.)
B. Or equal.

2.2 TYPE/CONSTRUCTION

A. Wall-talkers "Just-Rite," moderate gloss vinyl surface with woven backing, complying with the following:

1. Laminate thickness: 21 mils.
2. Tensile strength (warp x fill): 95 by 95 lbs.
3. Flammability testing: Class A, ASTM E 84.

2.3 ACCESSORIES

A. Primer: Type recommended by the wall covering manufacturer.
B. Adhesive: Heavy-duty recommended by the wall coverings manufacturer for the substrate.
C. Aluminum trim, end caps, tray and presentation rails: Match Design Consultant's control samples.
D. Miscellaneous accessories: As required for a complete installation.~~: To be selected.~~

PART 3 - EXECUTION

3.1 EXAMINATION

A. Examine conditions and measurements affecting the work of this Section at site.
B. Verify substrate surfaces are clean, dry, smooth, structurally sound and free from surface defects and imperfections that would show through the finished surface.
C. Correct detrimental conditions before proceeding with installation.

3.2 INSTALLATION

A. Acclimate wall covering to the area of installation a minimum of 24 hours before installation.
B. Follow the instructions in the manufacturer's installation instructions.
C. Apply primer and adhesive uniformly in accordance with their manufacturer’s instructions.
D. Install dry erase wall covering horizontally using a level line.
E. Smooth wall covering to the hanging surface to eliminate air bubbles, wrinkles, gaps and overlaps. Do not use sharp edged smoothing tools. Smooth material on the wall from the middle to the outside edge.
F. Remove excess adhesive along finished seams immediately after each wallcovering strip is applied. Clean entire surface with warm, mild soap solution, a natural sponge and clean towels. Rinse thoroughly with water and let dry before using. Change water often to maintain water cleanliness.

3.3 CLEANUP

A. Upon completion of installation, wash wall covering with an ammonia or alcohol based cleaner or mild soap and rinse thoroughly with water prior to using.

END OF SECTION

SECTION 09 80 00 - ACOUSTIC INSULATION AND SEALANTS

PART 1 - GENERAL

1.1 SUMMARY

A. Section includes: The requirements below apply to all rooms and spaces where partitions are indicated to be filled with acoustical insulation ~~and where acoustical insulation is indicated over suspended ceilings~~. Section includes.

1. Acoustic insulation.
2. Acoustic sealants and related materials.
3. Acoustic pads, tape and gaskets.

B. Thermal insulation, including pipe and duct insulation.
C. Related requirements: Division 01 for LEED requirements.

1.2 SUSTAINABLE DESIGN REFERENCE

A. USG Green Building Council (USGBC).

1.3 SUBMITTALS

A. Manufacturer product data for materials specified below.
B. LEED: LEED certification product data as specified in Section 01 81 13, “Sustainable Design Requirements”, for the following LEED credits:

1. Credit MR 4.1 & 4.2, Recycled Content.
2. Credit MR 5.1, Regional Materials, Manufactured Locally.
3. Credit MR 5.2, Regional Materials, Harvested / Extracted Locally.
4. Credit MR 6, Rapidly Renewable Materials.
5. Credit EQ 4.1, Low Emitting Materials, Adhesives & Sealants.

1.4 HANDLING

A. Store materials under cover, protected from moisture and off the ground or floor.
B. Remove insulation that becomes wet or damp immediately from the job site.

PART 2 - PRODUCTS

2.1 PERFORMANCE REQUIREMENTS

A. Acoustic sealant and pads shall prevent transmission of airborne sound through cracks in the construction.

2.2 MANUFACTURERS/PRODUCTS

A. Batt insulation:

1. Low-density glass fiber insulation for packing and filling small joints and openings behind sealants.

2. Long-strand glass fiber insulation of one to 2 pcf density, without covering, thickness as required.

    a. 700 Series Insulation by Owens-Corning Fiberglas.
    b. Microlite by Johns Manville.
    c. Toughgard Fiber Glass Duct Liner Insulation by CertainTeed.
    d. Or equal.

B. High-density ceramic or mineral fiber safing:

1. For packing and filling large and/or critical openings, usually behind a sealant or putty.
2. Long-strand ceramic or mineral fiber insulation of minimum 6 pcf density, without covering, thickness as required. Mineral (glass and rock wool) fiber, flame spread and smoke developed in conformance with IBC requirements and other authorities having jurisdiction. Non combustible having a minimum density of 1.1 pcf and minimum Noise Reduction Coefficient of 1.10 at 1/3 Octave Center Frequency (Hz).

    a. “QuietZone Accoustical Batts” by Owens Corning.
    b. “Roxul AFB - Acoustical Fire Batts” by Roxul Inc.
    c. "Fibrex Sound Attenuation Batt (SAFB) Insulation" by Fibrex Insulations Inc.
    d. “Thermafiber” by U.S. Gypsum.
    e. Or equal.
    f. Thickness; 2-1/2 inches, except as otherwise indicated.

C. Insulation in stud cavity:

1. Formaldehyde-free, unfaced fiber glass blankets, complying with ASTM C 665, Type 1, unfaced:

    a. “Sound-Shield” by Johns Manville.
    b. “Greenguard” by Knauf.
    c. Or equal.

2. Unless other indicated, provide insulation of same thickness as the stud depth. Select batt widths to match stud spacing and to be self supporting between the studs.

~~D.For application above ceilings, select batt widths to be supported on ceiling construction over the entire ceiling area.~~

2.3 ACOUSTIC SEALANTS & TAPE

A. Bulk sealant for closing small openings and joints up to a maximum of one-inch wide. Sealant backed with glass fiber packing, compressible joint filler or resilient backer rod.

1. Products:

    a. Pecora Corp.: AC-20.
    b. US Gypsum Co.: Sheetrock Acoustical Sealant.
    c. Tremco, Inc.: Acoustical Sealant.
    d. WW Henry Co.: Henry 313.
    e. Or equal.

B. Re-Barrier (acoustical) putty:

1. For closing large openings and joints typically over one inch wide. Applied full depth or backed with a dense safing, as detailed.
2. Non-shrinking, highly-adhesive, minimum 40-pcf density fire-barrier putty.

3. Products:

   a. Series SSP Firestop Putty and Putty Pads by Specified Technologies Inc.
   b. Nelson FSP Firestop Intumescent Putty by Chargar Corp.
   c. Fiberfrax Fyre Putty by Unifrax.
   d. Hilti CP 617 and CP 617L, intumescent moldable firestop putty for electrical outlet boxes.
   e. Or equal.

C. Foamed-in-place silicone sealant:

1. For closing electrical ducts and cable trays where they penetrate constructions. Apply full depth of construction between permanent or temporary dams.
2. Fire-resistant, minimum 17-pcf density, foamed-in-place silicone sealant.
3. Products:

   a. Fire Barrier 2001 Silicone RTV Foam by 3M Fire Barrier Products Division.
   b. Or equal.

D. Fire-resistive acoustic foam tape:

1. “Norseal V740FR” compressible, closed cell polyvinyl chloride foam tape with pressure sensitive adhesive by Saint Gobain.
2. Or equal.
3. Provide one-inch wide by not less than 1/4-inch thick, self-extinguishing, 6 pcf density UL-listed acoustical foam tape.
4. Furnish tape in rolls with protective release liner on non-adhesive face.

2.4 ACOUSTIC PADS

A. Use: For sealing the backs and sides of standard electrical back boxes. Select size to completely cover the box and overlap wall facing material at least one-inch.

1. Fire-rated assemblies:

   a. Flamesafe FSP 1077 Putty Pads by WR Grace & Co.
   b. Putty Pads by Specified Technologies Inc.
   c. Hilti CP617 Putty Pads by Hilti.
   d. 3M Fire Barrier Moldable Putty Pads by RectorSeal.
   e. Putty Pads by International Protective Coatings.
   f. Or equal.

2. Elsewhere:

   a. Type FSP Firestop Putty Pads by Nelson Electric.
   b. Lowry’s Outlet Box Pads by Harry A. Lowry & Associates.
   c. Sound Pad #68 by L.H. Dottie Co.
   d. Or equal.

B. Self-adhesive sponge neoprene pads:

1. For providing a compressible filler and acoustical seal in the gaps of slip joints. Set in place with 10 to 15 percent compression. Airtight splices work in length-wise direction.
2. Closed-cell sponge or foam neoprene of 8- to 12-pcf density, self-adhesive on one side, thicknesses and widths as required.

3. Products:

   a. Type V760 Norseal Foam Sealants by American Saint-Gobain.
   b. DS Brown Co.
   c. Or equal.

C. Felt-lined metal sleeves:

1. For sealing around pipe, hanger rod or other round element penetrating a construction. Inside sleeve diameter to equal outside diameter of penetrating element. Exposed end of sleeve closed with acoustical sealant.
2. Products:

   a. Pipe Isolator by Eleen.
   b. P-R Isolator by Potter-Roemer.
   c. Trisolator by Stoneman Engineering.
   d. Or equal.

D. Self-adhesive bubble gaskets:

1. To seal around the edge of an operating access panels. Typically set on jamb or head frame or stop to act as a compression seal.
2. Nominal 1/4-inch by 1/2-inch compressible bulb of silicone rubber or polyprene with self-adhesive on one side.
3. Products:

   a. 5050 Self-Adhesive Gasket by National Guard Products.
   b. S88D or S88W Siliconseal by Pemko.
   c. 797 or 797W by Reese Enterprises.
   d. Or equal.

PART 3 - EXECUTION

3.1 EXAMINATION/PREPARATION

A. Examine conditions and measurements affecting the work of this Section at site.
B. Before installing insulation in stud walls, thoroughly clean space of debris.
C. Correct detrimental conditions before proceeding with installation.

3.2 ACOUSTIC PADS

A. Install acoustic pads behind all recessed boxes in walls that have acoustical insulation in their stud cavities.
B. Clean the contact area of loose and foreign material sin accordance with the pad manufacturer’s instructions.
C. Verify that all unused knockouts are plugged before installing the pad.
D. Center the pad and cover the back and sides of all electrical, telephone and CATV boxes in sound-insulated walls with the acoustical pad.
E. Mold around conduits and cables entering the box.
F. Mold pads tightly to the boxes and to the adjacent surfaces.

3.3 BATT INSULATION

A. Cut to fit irregular spaces, butt edges into firm contact with each other and adjoining surfaces.
B. Hand pack around pipes, ducts, conduits, electrical boxes, etc., as required to thoroughly fill all voids and spaces between framing members and to form a continuous acoustical barrier.
C. Comply with the National Electrical Code (NEC) for installation in proximity to light fixtures. Do not install insulation closer than recommended by NEC.
D. Where in-wall electrical conduits is parallel to the wall, slit the insulation halfway to bury the conduit in it. Where the conduit is perpendicular to the wall (penetration), do not oversize the penetration; tape the conduit to prevent sound leakage.
~~E.[For application above ceilings, select batt width to be supported on ceiling construction over entire ceiling.]~~

3.4 ACOUSTIC SEALANT

A. Comply with ASTM C 919 and the following.
B. Clean space to be calked of debris, dust and powdered materials which would prevent the sealant from adhering properly.
C. Seal openings between gypsum board and the perimeter of items penetrating gypsum board, such as electrical boxes, continuously using sealant specified.
D. Seal openings between the gypsum board and floors and ceilings along sound-insulated walls continuously, and along those intersecting walls for a minimum distance of 3 feet from insulated walls. When multiple layers occur, seal the perimeter of each layer continuously.
E. Seal gypsum board edges in contact with door frames continuously.

3.5 FIELD QUALITY CONTROL

A. Prior to closing-in of insulated assemblies, or prior to Substantial Completion for insulation that will remain exposed in the building, refit, reinstall and/or replace wet, damaged and displaced insulation.

END OF SECTION

SECTION 09 83 16 – ACOUSTIC PAINT

PART 1 - GENERAL

1.1 SUMMARY

A. Section includes acoustic wall and ceiling plaster paint.
B. This Section supplements Section 09 90 00, Painting.
C. Related requirements: Division 01 for LEED requirements.

1.2 SUSTAINABLE DESIGN REFERENCE

A. USG Green Building Council (USGBC).

1.3 ADMINISTRATIVE REQUIREMENTS

A. As specified in Section 09 90 00.

1.4 SUBMITTALS/QUALITY ASSURANCE/JOB CONDITIONS & HANDLING

A. LEED: LEED certification product data as specified in Section 01 81 13, “Sustainable Design Requirements”, for the following LEED credits:

1. Credit MR 4.1 & 4.2, Recycled Content.
2. Credit MR 5.1, Regional Materials, Manufactured Locally.
3. Credit MR 5.2, Regional Materials, Harvested / Extracted Locally.
4. Credit MR 6, Rapidly Renewable Materials.
5. Credit EQ 4.1, Low Emitting Materials, Paints.

B. All other submittals: As specified in Section 09 90 00, except apply paint to acoustical plaster a minimum of 2-foot square, mounted on gypsum board.

1.5 WARRANTY

A. Paint shall have its original adherence at the end of one year and there shall be no evidence of blisters, running, peeling, scaling, chalking, streaks, or stains at the end of this period.
B. Washing painted surfaces with alkali-free soap and water shall remove surface dirt from painted surfaces without producing deteriorating effects.

PART 2 - PRODUCTS

2.1 MANUFACTURER

A. ProCoat Products, Inc.
B. Or equal.

2.2 MATERIALS

A. Paint: ProCoustic Acoustical Coating consisting of vinyl acrylic resin, ~~and~~ pigmented with titanium dioxide, calcium carbonate, silicate wetting and stabilizing agents, and water.

B. Performance requirements:

1. Sound absorption: ASTM C 423 and E 795, Improve Noise Reduction Coefficient from 0.55 to 0.60.
2. Fire rating: ASTM E 84, Class A flame spread.
3. Light reflectance: ASTM C 523, Improve reflectance of light from 0.81 to 0.88.
4. Combustion toxicity test: Pass.
5. Specific gravity: 1.26.
6. Viscosity: 70 to 75 Krebs at 75 degrees F.
7. Solids: 40 percent plus or minus one percent.
8. Color: White matching Design Consultant's control Sample.

PART 3 - EXECUTION

3.1 EXAMINATION/SURFACE PREPARATION

A. As specified in Section 09 90 00.

3.2 PAINTING

A. Comply with acoustic paint manufacturer instructions, and recommendations and the requirements of Section 09 90 00.

B. Re-coat or remove and replace work which does not match approved submittal and control sample ~~panel~~, or shows loss of uniformity and adhesion.

END OF SECTION

SECTION 09 90 00 – PAINTING

PART 1 - GENERAL

1.1 SUMMARY

A. Section includes:

1. Painting and finishing all interior and exterior new, exposed surfaces throughout the Project, except as excluded in Paragraphs B and C below.
2. Surface preparation, priming and coats of paint specified herein are in addition to shop priming and surface treatment specified in other Sections.
3. Paint all exposed surfaces whether or not colors are designated, except where the natural finish of the material is obviously intended or specifically noted as a surface not to be painted. Where items or surfaces are not specifically mentioned, paint these the same as adjacent similar materials or areas.
4. This Section also includes sealing joints between surfaces to be painted, except for joints designed to be expressed in the Work and joints between a natural finish and a painted surface.
5. Re-painting walls ~~Touching up~~ where paint is damaged on the existing adjacent building ~~where damaged~~ by the work of this Contract.
6. Section also includes preparation of existing surfaces to be painted and painting these surfaces.

B. Related requirements: Division 01 for LEED requirements.

C. Painting specified elsewhere:

1. Shop priming of ferrous metal items included under miscellaneous metal fabrications, hollow metal work, and similar work.
2. Finished (not primed) mechanical and electrical equipment including light fixtures, switchgear and distribution cabinets, except as specified in Article 3.4 below.
3. Prefinished glazed assemblies, including skylights.
4. Pavement markings.
5. Toilet compartments and screens.
6. Exterior wall louvers.
7. Flagpole.
8. Signage.
9. Piping identification.
10. Acoustic paint for acoustic wall and ceiling plaster.
11. High performance coating systems.

D. Painting not included: Do not paint the following surfaces.

1. Insulation and its facing.
2. Roofing.
3. Finish hardware, except those items noted USP.
4. Flexible door and window seals and weatherstripping (paint exposed metal to match door frame).
5. Finished metal surfaces such as anodized aluminum, stainless steel, chromium-plating, copper, bronze, brass and similar finished materials will not require finish painting.
6. Painting is not required on walls or ceilings in concealed and inaccessible areas, such as furred areas, pipe spaces, and duct shafts.

7. Operating parts, labels and nameplates:

   a. Do not paint moving parts of operating units, mechanical and electrical parts, such as valve and damper operator linkages, sinkages, sensing devices, motor and fan shafts.
   b. Do not paint over nameplates, Code required labels, such as UL and FM, or equipment identification, performance rating, name, or nomenclature plates.

1.2 SUSTAINABLE DESIGN REFERENCE

A. USG Green Building Council (USGBC).

1.3 ADMINISTRATIVE REQUIREMENTS

A. Scheduling ~~and sequencing: Sequencing~~: Schedule cleaning and painting so dust and other contaminants from the cleaning process will not fall on wet, newly painted surfaces.

1.4 DEFINITIONS

A. Paint: The term, as used in this Section, means all coating system components, including primers, emulsions, enamels, varnishes, stains, lacquers, sealers, fillers, and other applied materials whether used as prime, intermediate or finish coat.
B. Definitions of painting terms: ASTM D 16, unless otherwise specified.
C. Dry film thickness (DFT): Thickness of a coat of paint in fully cured state measured in mils (1/1000-inch).
D. Sheen: The terms used in these Specifications refer to the following gloss ranges when tested in accordance with ASTM D 523 test method.

Name	ASTM D 523 Test Method	Gloss Range
Flat	60-degree meter	0 to 7
Low sheen	60-degree meter	10 to 15
Eggshell	60-degree meter	25 to 30
Semi-gloss	60-degree meter	55 to 60
Gloss	60-degree meter	85 to 90

E. Coat: As used in this Section means a layer of paint, varnish, lacquer, or other material applied, then allowed to dry. To backroll or apply a wet-on-wet film still constitutes a single coat.
F. Finish: As used in this Section means the entire coating system including the texture, color, and sheen of a surface.
G. Refinish: As used in this Section implies a new finish will be applied to a surface that has been finished as defined above, whether existing before start of Work, or new.
H. Touchup: As used in this Section means correction of deficiencies in the specified work to achieve a properly painted surface.

1.5 SUBMITTALS

A. Materials:

   1. Copies of a complete materials list, identified by manufacturer name and product label or stock number.
   2. Prepare list in the form of a repetition of the specified paint finishes, with the addition of the specific product intended for each coat.

B. Color Samples:

1. ~~Eight-and-one-half- by 11-inch~~ Two-foot square Samples of each color for painted finishes.
2. Provide stepped samples, defining each separate coat, including block fillers and primers.
3. Use representative colors when preparing samples for review.
4. Provide a list of materials and applications for each coat of each sample. Label each sample for location and application.
5. Resubmit until required sheen, color, and texture are achieved.

C. Data: Manufacturer Product Data as follows.

1. Data for paint products, including paint label analysis, application instruction, and VOC content in grams/liter.
2. Duplicate copies of manufacturer affidavit with each shipment of materials delivered to the job site certifying that each material furnished complies with specified requirements.

D. LEED: LEED certification product data as specified in Section 01 81 13, “Sustainable Design Requirements”, for the following LEED credits:

1. Credit MR 4.1 & 4.2, Recycled Content.
2. Credit MR 5.1, Regional Materials, Manufactured Locally.
3. Credit MR 5.2, Regional Materials, Harvested / Extracted Locally.
4. Credit MR 6, Rapidly Renewable Materials.
5. Credit EQ 4.1, Low Emitting Materials, Paints.

1.6 QUALITY ASSURANCE

A. Painter’s qualifications: Firm and individuals experienced in applying paints and coatings similar in material, design, and extent to those specified for the Project, whose work has resulted in applications with a record of successful in-service performance for at least the last 5 years preceding Bid date..

B. Field Samples:

1. Apply Sample paint finishes (approximately 10-foot square) of each color scheme to wall areas, as directed by the Design Consultant. Refer to Section 09 24 00 for painting cement plaster mockup and to Section 09 29 00 for painting gypsum board and up.
2. Obtain Design Consultant's approval of field samples before proceeding further. Approved samples will be used as a standard for the Project, and if properly identified may remain a part of the Work.
3. Final acceptance of colors will be from job-applied samples.

1.7 JOB CONDITIONS

A. Environmental requirements:

1. Comply with paint manufacturer’s recommendations for environmental conditions and the following.
2. Provide adequate heating and ventilating to maintain environmental conditions recommended by paint manufacturer.
3. Do not apply finish in areas where dust is being generated.
4. Apply paint under the following prevailing conditions:

a. Air and surface temperatures are not below 40 degrees F. or above 120 degrees F.
b. Surface temperature is at least 5 degrees F. above the dew point.
c. When there is not threat of impending rain.

B. Protection:

1. Protect adjacent surfaces whether being painted or not against damage from painting operation. Correct damage by cleaning, repairing, replacing, and repainting, as approved by Design Consultant, and leave in an undamaged condition.
2. Use protective methods and materials, including temporary covering, recommended in writing by deferred (finish) manufacturer.
3. Provide "Wet Paint" signs to protect newly coated finishes. After completing coating operations, remove temporary protective wrappings provided by others to protect their work. Post signs immediately after painting.
4. Provide drop cloths, shields, barricades and other protection necessary to safeguard adjacent surfaces not to be painted.
5. Provide and maintain protection as required to protect finished work from damage until its acceptance.

C. Illuminate work area during painting to provide the same or greater level of illumination required to properly perform the work and will occur in the room or space after the building is in operation.

1.8 HANDLING

A. Store materials indoors and mix only in spaces suitable for such purpose. Protect adjacent surfaces when mixing.
B. Store paint containers so the manufacturer's labels are clearly visible.

1.9 WARRANTY

A. Color of exterior surfaces painted, as part of the work of this Section shall, at the end of one year, have remained free from serious fading when compared to a control sample of the original paint.
B. Interior and exterior paint shall have its original adherence at the end of one year and there shall be no evidence of blisters, running, peeling, scaling, chalking, streaks, or stains at the end of this period.
C. Washing painted surfaces with alkali-free soap and water shall remove surface dirt from painted surfaces without producing deteriorating effects.

1.10 MAINTENANCE MATERIAL

A. With closeout submittals deliver one identified unopened gallon of each type and color of paint material used on the Project to the City for future paint touchup.
B. In addition to manufacturer label, identify with room number, floor or area, type of paint, color and sheen, as applicable, for future identification.

PART 2 - PRODUCTS

2.1 ~~APPROVED~~ ACCEPTABLE MANUFACTURERS

A. Vista Paint Corp.
B. Dunn Edwards.

C. Sherwin Williams.

D. Frazee Paint Co.
E. Or equal.

2.2 PAINT

A. General:

1. Biocide content shall not exceed 0.025 percent by weight or volume.
2. Paint shall not contain fungicides or bactericides classified as mercury acetates, phenol phenates, or phenol formaldehyde.
3. Water-based paints shall not be formulated or manufactured with chemicals listed by Green Seal to be hazardous including, but not limited to, formaldehyde, halogenated solvents, aromatic hydrocarbons, mercury, and mercury compounds.
4. Paints shall not be tinted with pigments of lead, cadmium, chromium, and their oxides.

B. Quality and manufacture: Insofar as practicable, each paint shall be factory-mixed to match approved samples and colors, and be of a consistency permitting immediate application. Use best quality grade regularly manufactured by one of the manufacturers listed in the schedule at the end of the Section.
C. Paint uniformity and compatibility:

1. Box at the job site or factory-batch paint to ensure color uniformity and consistency. This includes the required maintenance materials.
2. Provide finish coats compatible with the prime coats used.

a. Review other Sections of these Specifications, in which prime coats are specified, and manufacturer data for shop-primed surfaces to be painted.
b. Be responsible for the compatibility of the total coating system.

3. Provide barrier coats over incompatible primer or remove and reprime.
4. Products of more than one approved manufacturer may be used, except that all products applied on a surface shall be by the same manufacturer.

2.3 MISCELLANEOUS MATERIALS

A. Joint sealant: Paintable sealant as specified in Section 07 92 00.
B. Galvanized etching product: One of the following.

1. Oakite CryCost 747.
2. Oakite 747 LTS.
3. Henkel Galvaprep 5.

2.4 COLOR SCHEDULE

A. Refer to the Finish and Materials Schedule for paint colors.
B. Number of colors to be used will be determined by the Design Consultant.

PART 3 - EXECUTION

3.1 EXAMINATION

A. Examine surfaces to be painted for conditions that would adversely affect the permanence and quality of this work.
B. Correct unsuitable conditions before proceeding with painting.

3.2 SURFACE PREPARATION

A. General: Prepare surfaces to receive the specified finishes in compliance with the paint manufacturer's instructions and the following. Extend painting on all surfaces visible from any angle.

B. Galvanized steel: Comply with American Galvanizers Association recommendations, ASTM D 2092, and the following.

1. Clean with commercial phosphoric acid solution or one of the products named above for pretreatment or by brush off blast cleaning with a fine abrasive to achieve a uniform anchor profile of 1.5 to 2 mils.
2. Recoat within the time limit recommended by the primer manufacturer.

C. Shop-primed metal: Remove oil, grease, dirt and foreign matter. Spot prime abraded surfaces with compatible primer.

D. Shop-painted metal: Sand to provide a mechanical bond with field applied finishes, or use a commercial preparation specifically formulated to improve paint bond.

E. Unprimed ferrous metal: Remove rust, mill scale, oil and other foreign matter.

F. Aluminum: Remove foreign matters and clean with mineral spirit.

G. Factory-primed equipment: Repair damaged primer; remove rust and clean to bright metal where appropriate. Sand or etch primer to permit bonding of finish coats. Clean surfaces thoroughly before applying additional coats.

H. Plaster and CMU:

1. Clean surfaces of dirt, laitance, encrustations and foreign matter.
2. In new and existing plaster patch holes, pits and other imperfections, not patched under other Sections, flush and smooth with adjacent surfaces.
3. Do not apply sealer or paint when the moisture content of the surfaces to be painted exceeds 8 percent.
4. Touchup suction spots after priming with an additional prime coat until all surfaces show a uniform coating.

I. Gypsum board:

1. Remove dust, loose particles or other matter that would prevent proper paint adhesion.
2. Check to see that joints and screw heads are properly covered with joint compound and sanded smooth and flush with adjacent surfaces.

J. Wood:

1. Sandpaper smooth and dust clean. Remove handling marks and raised grain.
2. Fill nail holes, cracks and depressions with wood filler~~, colored to match finish for wood scheduled to receive a transparent finish. Use a tack cloth on wood to receive a transparent finish to remove sanding dust.~~

K. Other materials not covered above: Prepare to receive paint in compliance with the paint manufacturer instructions.

L. Existing painted surfaces:

1. Wash surfaces with biodegradable detergent to remove dirt, dust and contaminants. Rinse clean. Use bleach on mildew.
2. Patch dents, gouges and other imperfections in painted surfaces and sand smooth and flush with adjacent undamaged surfaces.
3. Remove dust, rust and other surface contaminates, loose and unsound paint coatings, etc. as required to provide clean and sound surfaces to receive new paint.
4. Remove gloss from enamel paints with steel wool or by treating them with a commercial de-glosser used in compliance with its manufacturer's instructions.

M. Hardware:

1. Remove hardware, hardware accessories, machined surfaces, plates, lighting fixtures and similar items in place and not to be painted, or provide surface- applied protection prior to surface preparation and painting.
2. Coat cutouts for hinges, edges of lockset holes and same as for first coat.
3. Following completion of painting each space or area, reinstall the removed item by workmen skilled in the trades involved.

~~N.Fire extinguishers and fire hose cabinets: Apply 2 coats of paint finish, inside and out, matching finish and color of adjoining areas, unless otherwise noted or directed.~~

N. Weatherstripping and sound seals. Paint exposed metal surfaces to match the door frame, whether or not unfinished, furnished with factory prime coat, or factory treated for paint adhesion.

O. Access doors and panels: ~~Generally,~~ Paint both sides of doors and frame the color of surrounding walls and ceiling.

P. Phasing: Program cleaning and painting so that dust and other contaminants from the cleaning process will not fall on wet, newly painted surfaces.

3.3 PAINT PREPARATION

A. Open paint containers only as required for use. Mix paint in designated areas.

B. Thoroughly stir and agitate paint to uniformly smooth consistency suitable for proper application.

C. Do not reduce, change or use any materials except in compliance with manufacturer printed instructions.

D. In all cases, prepare and handle paint to prevent deterioration and inclusion of foreign matter.

3.4 APPLICATION

A. General:

1. Seal interior joints between wood or wood composite materials, trim, baseboard, molding, and casements and adjacent materials with paintable sealant specified in Section 07 92 00.

~~2.Except for prefinished wood doors, Finish top, bottom and edges of doors the same as faces promptly upon delivery to the jobsite.~~

2. Apply 2 coats of paint or sealer to top, bottom and cutouts of doors immediately after trimming.

~~4.Where the 2 faces of doors differ in color or finish, finish the edges to match the face visible when the door is open.~~

3. Apply paint only under conditions that will insure finishes free from blemishes and defects. Leave corners with no undue amount of paint buildup.
4. Use a slightly different shade for each coat of paint so that it may be readily identified.
5. Primer and intermediate coats shall be unscarred and completely integral when succeeding coats are applied. Sand and dust between each coat to remove defects visible from a distance of 5 feet.
6. Give particular attention to edges, angles, flanges, and other similar areas, where insufficient film thicknesses are likely to be present, and ensure proper millage in these areas.
7. Remove paint spillage and spatters on adjacent surfaces so as not to damage the surface being cleaned.

   a. Perform patching and repairs required because of painting operations.
   b. Refinish entire panel or assembly where portion of finish has been damaged or is not acceptable to the Design Consultant.

8. Paint interior surfaces of ducts, where visible thru registers and grilles, with a flat nonspecular black paint.
9. Unless otherwise directed by the Design Consultant, spray-paint exposed surfaces of ceiling diffusers, air return grilles, speakers and other electrical and mechanical items, except smoke detectors and sprinkler heads, in painted ceilings to match the ceilings, whether these items are primed or factory-finished.
10. Number of coats:

    a. The number of coats and paint film thickness required is the same regardless of the application method. Do not apply succeeding coats until the previous coat has completely dried.
    b. The number of coats specified is the minimum required for complete coverage and uniformity of color.
    c. Apply additional coats when undercoats, stains, or other conditions show through the final finish until the finish is of uniform color and appearance.

11. Paint surfaces behind movable equipment and furniture the same as similar exposed surfaces. Paint surfaces behind permanently fixed equipment or furniture with prime coat only.
12. Paint interior surfaces, which are a continuation of exterior surfaces, subject to exterior exposure (such as an out-swinging door), with the applicable exterior coating system.
13. Completely cover surfaces to be painted to provide an opaque, smooth surface film uniform in finish, color, appearance, and coverage. Painted surfaces with cloudiness, spotting, holidays, laps, brush marks, roller tracking, runs, sags, ropiness and other imperfections are not acceptable. Cut paint in sharp lines and color breaks.
14. Completed work shall match approved samples, as determined by the Design Consultant. Remove, refinish, or repaint work not complying with specified requirements.

B. Existing painted surfaces: Where damaged by the work of this Contract, paint with the paint system specified for the appropriate substrate, including primer. Paint walls or ceilings from corner-to-corner and floor-to-ceiling.

~~B.Labeling rated (fire and smoke walls and partitions): Identify both sides of rated walls and partitions above finished and decorative ceilings (plenum) with minimum 2-inch high, bright red letters spaced at 10 feet o.c. maximum, as follows. Identification can be painted using a stencil or by using pre-printed self-adhesive labels.~~

~~1.Fire rated partitions: "FIRE PARTITION - DO NOT PENETRATE."~~
~~2.Smoke barrier partitions: "SMOKE PARTITION - DO NOT PENETRATE."~~

C. Application method: Contractor's option provided applied coatings match approved samples. The Design Consultant reserves the right to require that paint be sprayed for smoothness and uniformity.

D. Priming:

1. Prime bare metal scheduled to be painted, and not embedded in concrete and masonry, immediately upon delivery to the site.
2. Pre-paint telephone and electrical backboards before installation.
3. Time lapse between priming and application of second coat shall be as short as possible.

E. Shop-primed metal:

1. Apply 2 finish coats of paint to match adjoining surfaces, as directed by the Design Consultant, to shop primed mechanical and electrical equipment. This work includes but is not limited to interior of fire hose cabinets, air grilles, ceiling diffusers, electrical and telephone panels, and access panels.

2. Paint conduits, outlets and pull boxes, and mechanical equipment exposed to view, such as covered and uncovered piping and ductwork, pumps, compressors, air conditioning equipment and tanks as specified in this Section.
3. Paint the back side of access panels, removable or hinged covers to match the exposed surfaces.

F. Miscellaneous painting: Surfaces to be painted and not specifically described herein, shall be painted with a product specifically manufactured or prepared for the material and surface to be painted with a prime and 2 finish coats.

3.5 TOUCHUP/CLEANING

A. At completion of construction activities of other trades, touchup and restore damaged or defaced painted surfaces. Comply with procedures specified in PDCA P1.

3.6 PAINT FINISH SCHEDULE

A. Finish all surfaces in compliance with the following schedule. Catalog names and numbers refer to products by the Vista Paint Co., Dunn Edwards and Sherwin Williams, except as otherwise specified.

SURFACE	NUMBER OF COATS	VISTA PAINT	DUNN-EDWARDS
EXTERIOR SURFACES			
Ferrous Metal - (Including Doors and Frames): See Section 09 96 00 – "High-Performance Coatings"			
Aluminum & Galvanized Steel: See Section 09 96 00 – "High-Performance Coatings"			
Stair Tread Edges: Series 222 Deco-Tread "black" by Tnemec.			
Portland Cement Plaster: 100 percent Acrylic Flat			
	1st Coat	4600 Uniprime II	W 709 Eff-Stop
	2nd & 3rd Coat	2000 Duratone	W 701 Evershield
CMU: 100 percent Acrylic Elastomeric			
	1st Coat	4600 Uniprime II	W 718 Super Loc
	2nd Coat	1900 Weather Master at 8 to 10 MILS per coat DFT	W370 Endurawall at 8 to 10 MILS per coat DFT
INTERIOR SURFACES			
~~Wood: Acrylic Dryfall – Flat. Use for overhead surfaces.~~			
	~~1st Coat~~	~~DF 12 Dryfall Flat~~	~~W 6079 Aquafall Flat~~
	~~2nd Coat~~	~~DF 12 Dryfall Flat~~	~~W 6079 Aquafall Flat~~
~~CMU: Semi-Gloss Acrylic~~			
	~~1st Coat~~	~~018 Acrylic Block Filler~~	~~MBPR00 Blockfil~~
	~~2nd & 3rd Coat~~	~~8400 Carefree SG~~	~~SPMA50 Suprema SG~~
~~Plaster: Flat Acrylic~~			
	~~1st Coat~~	~~4600 Uniprime II~~	~~W 781 Super-Loc~~
	~~2nd & 3rd~~	~~8100 Carefree Flat~~	~~W 401 Decovel~~

SURFACE	NUMBER OF COATS	VISTA PAINT	DUNN-EDWARDS
	~~Coat~~		
Gypsum Board: Eggshell			
	1st Coat	1100 Hi-Build PVA Primer	W 101 Vinylastic
	2nd & 3rd Coat	8200 Carefree Velva Sheen	W411V Suprema
Gypsum Board: Semi-Gloss Acrylic			
	1st Coat	1100 Hi-Build PVA Primer	W 411V Suprema
	2nd & 3rd Coat	7000 Acriglo Semi-Gloss	W 450V Decoglo
~~Gypsum Board: Gloss Acrylic Epoxy~~			
	~~1st Coat~~	~~1100 Hi-Build PVA Sealer~~	~~W 420 Walltone~~
	~~2nd & 3rd Coat~~	~~Carboline Sanitile 255 @ 2-3 MILS DFT~~	~~Intergard 735~~
~~Plaster: Gypsum, Eggshell~~			
	~~1st Coat~~	~~4000 Uniprime II~~	~~W 707 Unikote~~
	~~2nd & 3rd Coat~~	~~7000 Acriglo~~	~~W411V Suprema~~
~~Particleboard, Hardboard: Flat~~			
	~~1st Coat~~	~~4000 Uniprime II~~	~~W 707 UniKote~~
	~~2nd & 3rd Coat~~	~~8100 Carefree Flat~~	~~W 401 Decovel~~
~~Particleboard, Hardboard: Semi-Gloss Acrylic~~			
	~~1st Coat~~	~~4000 Uniprime II~~	~~W 707 Unikote~~
	~~2nd & 3rd Coat~~	~~7000 Acriglo SG~~	~~W 450V Decoglo~~
~~Particleboard, Hardboard: Gloss 100 percent Acrylic~~			
	~~1st Coat~~	~~4000 Uniprime II~~	~~W 707 Unikote~~
	~~2nd & 3rd Coat~~	~~8500 Carefree Gloss~~	~~W 960V Permagloss~~
Ferrous Metal: Semi-Gloss 100 percent Acrylic			
	1st Coat	4800 Metal Pro Primer	W715 Ultra Grip
	2nd Coat	8400 Carefree Semi-Gloss	W 901V Permasheen
	3rd Coat	8400 Carefree Semi-Gloss	W 901V Permasheen
Ferrous Metal: Gloss 100 percent Acrylic			
	1st Coat	4800 Metal Pro Primer	W715 Ultra Grip
	2nd Coat	8500 Carefree Gloss	W 960V Permagloss
	3rd Coat	8500 Carefree Gloss	W 960V Permagloss
~~Ferrous Metal (Heavy Duty): Aliphatic Urethane. Refer to Exterior Surfaces~~			
	~~1st Coat~~	~~Carboline Carboguard 890VOC at 5 MILS DFT~~	~~International IP714 VOC Primer @ 5 MILS DFT~~
	~~2nd Coat~~	~~Carboline Carbothane 133MC at 5 MILS DFT~~	~~International 630 VOC Ultra-Shield Urethane at 5 MILS DFT~~
	~~OR~~	~~For shop-primed, omit first coat~~	~~For shop-primed, omit first coat~~
Aluminum: Semi-Gloss 100 percent Acrylic			
	1st Coat	4800 Metal Pro Primer	W715 Ultra Grip
	2nd Coat	8400 Carefree SG	W901V Permasheen
	3rd Coat	8400 Carefree SG	W901V Permasheen

Aluminum: Gloss 100 percent Acrylic

1st Coat	4800 Metal Pro Primer	W715 Ultra Grip
2nd Coat	8500 Carefree Gloss	W960V Permagloss
3rd Coat	8500 Carefree Gloss	W960V Permagloss

Intumescent Paint on electrical and telephone plywood backing panel: Apply one or more coat (as recommended by the paint manufacturer, of latex paint "Intumescent Latex" (thin film) by Contego International, "Flame Stop IM" by Flame Stop, Inc., or equal.

Concrete Epoxy Flooring System in Electrical and Telephone Closets: Track blast or bead blast floor prior to application (ASTM D 4260)

1st Coat	Carboline Carboguard 890VOC at 5 MILS DFT	International IP714 VOC Primer @ 5 MILS DFT
2nd Coat	Carboline Carboguard 890VOC at 5 MILS DFT	International IP714 VOC Primer @ 5 MILS DFT

END OF SECTION

SECTION 09 96 00 - HIGH-PERFORMANCE COATINGS

PART 1 - GENERAL

1.1 SUMMARY

A. Section includes the following:

1. Surface preparation and field application of high-performance coating systems to exterior steel surfaces, except for stainless steel and prefinished surface.
2. Establishing requirements for shop priming specified assemblies/materials specified elsewhere. Coordinate surface preparation and shop priming with the requirements of this Section.
3. Surface preparation and priming steel components scheduled to receive aluminum cladding.

B. Related requirements:

1. Division 01 for LEED requirements.
2. Division 05 for shop-primed ferrous metal.
3. Division 09 for general field painting.

1.2 SUSTAINABLE DESIGN REFERENCE

A. USG Green Building Council (USGBC).

~~1.3ADMINISTRATIVE REQUIREMENTS~~

~~A.Scheduling and sequencing:~~
~~B.Pre-installation meeting:~~

1.3 DEFINITIONS

A. Standard coating terms defined in ASTM D 16 apply to this Section.
B. Gloss ranges used in this Section include the following:

1. Semi-gloss refers to medium-sheen finish with a gloss range between 30 and 65 when measured at a 60-degree meter.
2. High gloss refers to high-sheen finish with a gloss range more than 65 when measured at a 60-degree meter.

C. Coating types:

1. Shop primer on non-galvanized steel surfaces: Zinc.
2. Intermediate coat: Epoxy.
3. Finish coat: Hybrid Urethane/Modified Siloxane.

1.4 SUBMITTALS

A. Data: The manufacturer Product Data for each coating system indicated, including primers.

1. Material list: An inclusive list of required coating materials. Indicate each material and cross-reference the specific coating, finish system, and application. Identify each material by manufacturer's catalog number and general classification.
2. Manufacturer's information: Manufacturer's technical information, including label analysis and instructions for handling, storing, and applying each material specified.

B. Manufacturer’s certification: Certifications that products supplied comply with requirements indicated that limit the amount of VOC in coating products.

C. Samples: Samples of each color and material to be applied, with texture to simulate actual conditions, on representative Samples of the actual substrate.

1. Provide stepped Samples defining each separate coat, including primers. Use representative colors when preparing Samples for review. Resubmit until required sheen, color, and texture are achieved.
2. List of material and application for each coat of each sample. Label each sample for location and application.
3. Samples for each substrates for Design Consultant review of color and texture: Provide two 12-inch square samples for each type of substrate with each type of finish.

D. Qualification data: For applicator to demonstrate its capabilities and experience. Include lists of completed projects with project names and addresses, names and addresses of Design Consultant and City~~s~~, and other information specified.

E. Certification: Duplicate copies of manufacturer's affidavit with each shipment of materials delivered to the jobsite certifying that material furnished complies with specified requirements.

F. LEED: LEED certification product data as specified in Section 01 81 13, “Sustainable Design Requirements”, for the following LEED credits:

1. Credit MR 4.1 & 4.2, Recycled Content.
2. Credit MR 5.1, Regional Materials, Manufactured Locally.
3. Credit MR 5.2, Regional Materials, Harvested / Extracted Locally.
4. Credit MR 6, Rapidly Renewable Materials.
5. Credit EQ 4.1, Low Emitting Materials, Paints.

1.5 QUALITY ASSURANCE

A. Manufacturer qualifications: Firm that specializes in producing high quality industrial coatings with a minimum of 10 years experience demonstrated by case histories in the designated field of application.

B. Applicator qualifications: Firm who has completed high-performance coating systems similar in material and extent to those indicated for Project and whose work has a record of successful in-service performance.

C. Source limitations:

1. Obtain primers and undercoat materials for each coating system from the same manufacturer as the finish coats.
2. Only coatings that meet or exceed the performance of those identified herein may be submitted. No substitutions will be considered that change the generic chemistry of the coatings required by the Specifications.

3. Where manufacturer's coating recommendations exceed those listed, the increased coating thickness shall be used. The coating thickness and coverage rate shall not be reduced from those scheduled.

D. SCAQMD Rule 1113: Submit paint manufacturer's certificate stating that provided coatings meet or exceed current SCAQMD Rule 1113 requirements.

E. Mockups: Provide a full-coat benchmark finish sample of each type of coating and substrate required.

1. Design Consultant will select areas or surface to represent surfaces and conditions for application of each type of coating and substrate.
2. ~~After permanent lighting and other environmental services have been activated in interior locations, a~~Apply coating systems to each surface as specified. Provide the required sheen, color, and texture of each surface.

   a. After finishes are accepted, Design Consultant will use each surface to evaluate coating systems of a similar nature.

3. Final approval of colors will be from benchmark samples.

1.6 HANDLING

A. Deliver materials to Project site in manufacturer's original, unopened packages and containers bearing manufacturer's name and label with the following information:

1. Name or title of material.
2. Product description (generic classification or binder type).
3. Manufacturer's stock number and date of manufacture.
4. Contents by volume, for pigment and vehicle constituents.
5. Thinning instructions.
6. Application instructions.
7. Color name and number.
8. Handling instructions and precautions.

B. Store materials not in use in tightly covered containers in a well-ventilated area at a minimum ambient temperature of 45-degree F. Maintain containers used in storage in a clean condition, free of foreign materials and residue.

1.7 PROJECT CONDITIONS

A. Apply coatings only when temperature of surfaces to be coated and surrounding air temperatures are between 45 and 95-degree F.

B. Do not apply coatings in rain, fog, or mist; when relative humidity exceeds 85 percent; at temperatures less than 5 degrees F above the dew point; or to damp or wet surfaces.

1. Allow wet surfaces to dry thoroughly and attain temperature and conditions specified before proceeding with or continuing coating operation.
2. Work may continue during inclement weather only if areas and surfaces to be coated are enclosed and temperature within the area can be maintained within limits specified by manufacturer during application and drying periods.

C. Protection:

1. Provide and maintain protection as required to protect finished work from damage until its acceptance.

2. Protect work of other trades, whether being coated or not, against damage from coating operation.
3. Provide "Wet Paint" signs to protect newly coated finishes. After completing coating operations, remove temporary protection.
4. Provide drop cloths, shields, barricades and other protection necessary to safeguard adjacent surfaces not to be painted. Post signs immediately after painting.

1.8 EXTRA MATERIALS

A. With closeout submittals, deliver one identified unopened gallon container of each color (if more than one color was used) of coating used on the Project. Identify with area and material for future identification.
B. Provide the City copy of instructions for touchup and maintenance recommendations.

PART 2 - PRODUCTS

2.1 MANUFACTURERS

A. Tnemec Co. Inc. (basis of design).
B. Carboline Co.
C. DuPont.
D. Sherwin Williams; Industrial and Marine Coatings (SW).
E. Or equal.

2.2 COATING MATERIALS, GENERAL

A. General: Provide paint systems meeting or exceeding current SCAQMD Rule 1113 requirements.
B. Material compatibility: Provide primers, undercoats, and finish-coat materials that are compatible with one another and substrates indicated under conditions of service and application, as demonstrated by manufacturer based on testing and field experience.
C. Material quality:

1. Provide manufacturer's highest grade of the various high-performance coatings specified. Materials not displaying manufacturer's product identification are not acceptable.
2. Use of manufacturer's proprietary product names to designate colors or materials is not intended to imply that products named are required to be used to the exclusion of equivalent products of other manufacturers.
3. Furnish manufacturer's material data and certificates of performance for proposed substitutions.

2.3 COLORS

A. Colors: Match Design Consultant’s control samples.

~~2.4COATING SYSTEM FOR INTERIOR UNPRIMED METAL SURFACES EXPOSED TO PUBLIC CONTACT~~

~~A.Applies to handrails and guardrails, exposed structural and miscellaneous steel, steel doors and frames, metal surfaces in toilet rooms and in maintenance storage areas, and in areas of similar conditions indicated.~~
~~B.Surface preparation: SSPC-SP6 Commercial Blast Cleaning.~~

~~C.Zinc-rich Urethane Primer/Polyamide Epoxy Finish, Satin Finish.~~
~~D.Shop primer:~~

~~1.Tnemec Series 69 Epoxoline at 4 to 6 mils (100-150 microns) DFT.~~
~~2.Carboline: Carboline 890.~~
~~3.SW: Tile Clad Plus B-62.~~

~~E.Finish coat:~~

~~1.Tnemec series 69 Epoxoline at 4 to 6 mils (100 – 1550 microns) DFT.~~
~~2.Carboline: Carboline 890.~~
~~3.SW: Tile Clad Plus B-62.~~

~~F.Gloss range: To be determined.~~
~~G.Total DFT: No less than 8 mils (200 microns) DFT~~
~~H.Quality assurance standards:~~

~~1.ASTM D 4541: Primer and complete coating system shall have adhesion strength of not less than 1000 psi.~~
~~2.ASTM D 3359: Primer and complete coating system shall have a rating of not less than 5.~~
~~3.ASTM D 3363: Finish coat hardness shall be 3H.~~
~~4.ASTM D 4060: Finish coat shall pass no more than 115 mg loss after 1,000 hours with 1,000 g load.~~

2.4 COATING SYSTEM FOR EXTERIOR~~/INTERIOR~~ EXPOSED FACTORY-PRIMED METAL SURFACES

A. Compatibility: Test coating compatibility prior to application.
B. Surface preparation: SSPC-SP11 for damaged and abraded areas.
C. Touchup:

1. Where shop primer is damaged or abraded, field repairs shall consist of surface preparation by SSPC-SP11 followed by application of surface tolerant primer to bare surfaces.
2. Where the shop primer is incompatible with the finish system, apply the same spot primer be fully at the 3 mils (75 microns) DFT as a tie-coat for succeeding applications.

D. Surface tolerant epoxy primer/aliphatic acrylic preparation finish — semi-gloss finish (where primers are incompatible).
E. Spot primer:

1. Tnemec Series 135 Chembuild at 3 to 5 mils (75-125 microns) DFT.
2. Carboline: Carbomastic 15.
3. SW: Surface-tolerant epoxy B-58.

F. Primer:

1. Tnemec Series 135 Chembuild at 3 to 5 mils (75 – 125 microns) DFT.
2. Carboline: Carbomastic 15.
3. SW: Surface-tolerant epoxy B 58.

G. Finish coat:

1. Tnemec Series 750 UVX at 3 to 5 mils (75 to 125 microns) DFT.
2. Carboline: Carboxane 2000.

3. SW: Polysiloxane.
4. Gloss range: To be determined.

H. Total DFT: No less than 6 mils (150 microns) of field-applied coating.
I. Quality assurance standards:

1. ASTM D 3363: Finish coat hardness shall be HB.
2. ASTM D 4060: Finish coat shall pass no more than 95 mg loss after 1,000 hours with 1,000 g load.

2.5 COATING SYSTEM FOR GALVANIZED STEEL

A. Surface preparation:

1. SSPC-SP1 preparation to remove soluble contamination.
2. Thoroughly roughen the entire surface to be coated using compressed air nozzle brush-off blast cleaning with a fine abrasive to achieve a uniform anchor profile (1.5 to 2 mils) (38 to 50 microns).
3. Pressure wash with 140 to 150-degree F alkaline cleaner followed by tap water rinse is the preferred method to remove both water soluble and organic solvent soluble contaminants.

B. Touchup: Where the galvanized surface is damaged, repair shall consist of mechanical surface cleaning to bare metal, followed by touchup application of organic zinc-rich moisture cured urethane primer at 2.5 mils DFT minimum.
C. Surface tolerant epoxy primer/aliphatic acrylic polyurethane gloss finish.
D. Spot primer:

1. Tnemec Series 90-97 Tnemec-zinc at 2.5 to 3.5 mils (65 – 90 microns) DFT
2. Carboline: Carboline 621.
3. Corathane 1 galvanized zinc primer.

E. Primer:

1. Tnemec: Series L69 Epoxoline.
2. Carboline: Carboline 890.
3. SW: Tile Clad Plus B-62.

F. Finish coat: Tnemec Series 75UVX or Carboline “Carboxane 2000” at 2 to 3 mils (100-150 microns) DFT

1. Gloss range: To be determined.

G. Total DFT: No less than 4 mils (200 microns) of field-applied coating.
H. Quality assurance standards:

1. ASTM D 3363: Finish coat hardness shall be HB or better.
2. ASTM D 4060: Finish coat shall pass no more than 95 mg loss after 1,000 hours with 1,000 g load.

2.6 COATING SYSTEM FOR ALUMINUM

A. Surface preparation:

1. Preparation: Thoroughly roughen the entire surface to be coated using compressed air nozzle brush-off blast cleaning with a fine abrasive to achieve a uniform anchor profile (1.5 to 2 mils) (38 to 50 microns).

2. System Type: Epoxy/Hybrid Urethane.

   a. Prime Coat: Tnemec L69 Epoxoline @ 2.0 to 4.0 mils DFT.
   b. Finish Coat: Tnemec 750 UVX @ 2.0 to 4.0 mils DFT.

PART 3 - EXECUTION

3.1 EXAMINATION

A. Examine substrates and conditions under which high-performance coatings will be applied, for compliance with coating application requirements.

   1. Apply coatings only after unsatisfactory conditions have been corrected and surfaces to receive coatings are thoroughly dry.
   2. Correct unsatisfactory conditions before starting application.

B. Coordination: Review other Sections in which primers or other coatings are provided to ensure compatibility of total systems for various substrates. Furnish information on characteristics of specified finish materials to ensure compatible primers.

   1. If a potential incompatibility of primers applied by other trades exists, obtain the following from the primer applicator before proceeding:

      a. Confirmation of primer's suitability for expected service conditions.
      b. Confirmation of primer's ability to be top coated with materials specified.

   2. Notify Design Consultant about anticipated problems before using the coatings specified over substrates primed under other Sections.

3.2 PREPARATION

A. General:

   1. Remove plates, machined surfaces, and similar items already in place that are not to be coated.
   2. If removal is impractical or impossible because of size or weight of item, provide surface-applied protection before surface preparation and coating.
   3. After completing coating operations, reinstall items that were removed; use workers skilled in the trades involved.

B. Cleaning:

   1. Before applying high-performance coatings, clean substrates of substances that could impair bond of coatings.
   2. Remove oil and grease before cleaning.
   3. Schedule cleaning and coating application so dust and other contaminates from cleaning process will not fall on wet, newly coated surfaces.

C. Surface preparation: Clean and prepare surfaces to be coated according to manufacturer's instructions for each substrate condition, and as specified. Provide barrier coats over incompatible primers or remove primers and reprime substrate.

D. Material preparation: Carefully mix and prepare coating materials according to manufacturer's written instructions.

1. Maintain containers used in mixing and applying coatings in a clean condition, free of foreign materials and residue.
2. Stir materials before applying to produce a mixture of uniform density. Stir as required during application. Do not stir surface film into the material. Remove film and, if necessary, strain coating material before using.
3. Use only the type of thinners approved by manufacturer and only within recommended limits.

E. Tinting: Tint each undercoat a lighter shade to facilitate identification of each coat if multiple coats of the same material are to be applied. Tint undercoats to match color of finish coat, but provide sufficient difference in shade of undercoats to distinguish each separate coat.

3.3 APPLICATION

A. General: Apply coatings according to their manufacturer's instructions and the following.

1. Use applicators and techniques best suited for the material being applied.
2. Do not apply coatings over dirt, rust, scale, grease, moisture, scuffed surfaces, or conditions detrimental to forming a durable coating film.
3. Coating colors, surface treatments, and finishes are indicated in the coating system descriptions.
4. Provide finish coats compatible with primers used.
5. The term "exposed surfaces" includes areas visible when permanent or built-in fixtures, convector covers, grilles, covers for finned-tube radiation, and similar components are in place. Extend coatings in these areas, as required, to maintain system integrity and provide desired protection.

    a. Coat surfaces behind movable equipment and furniture the same as similar exposed surfaces. Before final installation, coat surfaces behind permanently fixed equipment or furniture with prime coat only.
    b. Coat back sides of access panels, removable or hinged covers, and similar hinged items to match exposed surfaces.

B. Scheduling coating: Apply first coat to surfaces that have been cleaned, pretreated, or otherwise prepared for coating as soon as practicable after preparation and before subsequent surface deterioration.

1. The number of coats and film thickness required is the same regardless of application method.

    a. Omit primer on metal surfaces that have been shop primed and touchup painted.
    b. Do not apply succeeding coats until previous coat has cured as recommended by manufacturer.
    c. Where manufacturer's written instructions require sanding, sand between applications to produce a smooth, even surface.
    d. Allow sufficient time between successive coats to permit proper drying. Do not recoat surfaces until coating has dried to where it feels firm, does not deform or feel sticky under moderate thumb pressure, and application of another coat does not cause undercoat to lift or lose adhesion.

2. If undercoats or other conditions show through final coat, apply additional coats until cured film has a uniform coating finish, color, and appearance. Give special attention to edges, corners, crevices, welds, exposed fasteners, and similar surfaces to ensure that they receive a dry film thickness equivalent to that of flat surfaces.

C. Application procedures:

1. Brush, roller, spray, or other applicators according to manufacturer's requirements.
2. Apply primers and first coats by brush unless manufacturer's written instructions permit using roller or mechanical applicators.

D. Minimum coating thickness: Apply each material no thinner than manufacturers recommended spreading rate. Provide total dry film thickness of the entire system as recommended by manufacturer.

E. Prime coats:

1. Before applying finish coats, apply a prime coat of material, as recommended by manufacturer, to material required to be coated or finished that has not been prime coated by others.
2. Recoat primed and sealed substrates if there is evidence of suction spots or unsealed areas in first coat, to ensure a finish coat with no burn-through or other defects caused by insufficient sealing.

F. Completed work: Match approved samples for color, texture, and coverage. Remove, refinish, or recoat work that does not comply with specified requirements.

3.4 FIELD QUALITY CONTROL

A. City reserves the right to invoke the following procedure at any time and as often as City deems necessary during the period when coatings are being applied:

1. City may engage the services of a qualified testing agency to sample coating material being used. Samples of material delivered to Project site will be taken, identified, sealed, and certified in presence of Contractor.
2. Testing agency may perform appropriate tests for the following characteristics as required by City:

   a. Quantitative materials analysis.
   b. Absorption.
   c. Accelerated weathering.
   d. Accelerated yellowness.
   e. Color retention.
   f. Alkali and mildew resistance.
   g. Abrasion resistance.
   h. Apparent reflectivity.
   i. Washability.
   j. Dry opacity.
   k. Recoating.
   l. Skinning.

3. City may direct Contractor to stop applying coatings if test results show materials being used do not comply with specified requirements.

   a. Contractor shall remove non-complying coating materials from Project site, pay for testing, and recoat surfaces coated with rejected materials.
   b. If necessary, Contractor may be required to remove rejected materials from previously coated surfaces if, on recoating with specified materials, the 2 coatings are not compatible.

3.5 CLEANING

A. After completing coating application, clean spattered surfaces.
B. Remove spattered coatings by washing, scraping, or other methods.
C. Do not scratch or damage adjacent finished surfaces.

3.6 PROTECTING

A. At completion of construction activities of other trades, touchup and restore damaged or defaced coated surfaces.

END OF SECTION

SECTION 10 21 13 - TOILET COMPARTMENTS AND SCREENS

PART 1 - GENERAL

1.1 SUMMARY

A. Section includes:

1. Floor-mounted, overhead-braced solid ~~phenolic~~ HDPE toilet compartments.
2. Wall mounted solid ~~phenolic~~ HDPE urinal screens.

B. Related requirements:

1. Division 01 for LEED requirements.
2. Division 09 for backing plates for attachment of compartments and partitions.
3. Division 10 for toilet room accessories.

1.2 DEFINITIONS

A. HDPE: High density polyethylene.

1.3 SUSTAINABLE DESIGN REFERENCE

A. USG Green Building Council (USGBC).

1.4 ADMINISTRATIVE REQUIREMENTS

A. Coordinate location of concealed blockings for attachment of compartments and screens with framer before installation of gypsum board.

1.5 SUBMITTALS

A. Data: Manufacturer's Product Data for partitions and screens. Supplement with shop drawings showing plan layout, and large scale details of attachment to adjacent construction and supports.

B. Shop Drawings:

1. Show layout of compartments and screens in each space to receive them.
2. Show fabrication and erection of assemblies to extent not fully described by manufacturer's data sheets.
3. Show anchorage, accessory items and finishes.
4. Provide location drawings for bolt hole locations in supporting members for attachment of compartments.

C. Samples:

1. Six-inch square Samples of each color of selected panel material.
2. Full size Samples of hardware.

D. LEED: LEED certification product data as specified in Section 01 81 13, "Sustainable Design Requirements", for the following LEED credits:

1. Credit MR 4.1 & 4.2, Recycled Content.
2. Credit MR 5.1, Regional Materials, Manufactured Locally.
3. Credit MR 5.2, Regional Materials, Harvested / Extracted Locally.
4. Credit MR 6, Rapidly Renewable Materials.
5. Credit EQ 4.1, Low Emitting Materials, Adhesives & Sealants.

E. Warranty: Sample copies of manufacturer's warranties for assemblies to be furnished under this Section, clearly defining terms, conditions, and time periods for the warranty.
F. Closeout: Bound maintenance instructions for the panels.

1.6 QUALITY ASSURANCE

A. Coordinate fabrication of toilet partitions for installation of surface-mounted and recessed toilet room accessories supported by the partitions. Obtain Shop or setting drawings, templates and directions required for reinforcement to be built-in the partitions.
B. Comply with CCR, Title 24 and ADA Accessibility Guidelines for Buildings and Facilities, and ANSI 117.1 Accessibility Standard Voluntary or Enforceable.

1.7 HANDLING

A. Maintain manufacturer's protective covers on panels as long as possible to protect them from damage.

~~1.7~~1.8 SPECIAL WARRANTY

A. Warrant materials against breakage, corrosion and delamination for 10 years after Substantial Completion.
B. Repair defective materials, at no cost to the City, within the warranty period.

1.9 MAINTENANCE

A. With closeout submittal, provide instructions for proper care of toilet partitions, such as: required lubrications, adjustments, and cleaning.

PART 2 - PRODUCTS

2.1 MANUFACTURERS

~~A.Accurate Partitions Corp.~~
~~B.Bobrick Washroom Equipment, Inc.~~
~~C.Capitol Partitions, Inc.~~
~~D.Columbia Partitions, Inc.~~
~~E.Flush-Metal Partition Corp.~~
~~F.Gamco.~~
~~G.General Partitions Manufacturing Corp.~~
~~H.Global Steel Products (basis of design.)~~
~~I.Metpar Steel Products Corp.~~
~~J.Sanymetal Products Corp.~~
A. Santana Products, Inc.
B. Poly-Mar HD toilet compartments~~Shanahan's Manufacturing~~.
~~K.~~
~~L.~~C. Or equal.

2.2 COMPONENTS

A. Panels, doors and pilasters:

1. Panel material: One-inch thick, high density, solid polyethylene (HDPE) with homogenous color throughout, of the color(s) selected by the Architect.

2. Finish: "Plasi-Glaze", self-lubricating glaze by Santana Products, ~~Trespa solid composite phenolic,~~ 2 or more standard colors ~~TBD~~selected by the Design Consultant from the manufacturer full palette.
3. Provide materials selected for surface flatness and smoothness, and that are waterproof, non-absorbent and resistant to marking.
4. Exposed surfaces which exhibit defects, discolorations, and other imperfections are not acceptable.
5. Round edges to a 1/4-inch radius.

B. Pilaster shoes and caps: ASTM A 167, Type 302/304 stainless steel, not less than 3 inches high, 0.0396-inch thick (20 gage), No. 304 stainless steel.
C. Wall Brackets: 1-1/2-inch legs continuous aluminum extrusions ~~stirrup types~~ fabricated from 6463-T5 aluminum alloy with a clear anodized finish.
D. Headrail: Extruded 6463-T5 alloy aluminum with anti-grip design.
E. Headrail brackets: 20-gage stainless steel with satin finish.
F. Hardware and accessories: Heavy duty operating hardware and accessories of brass, stainless steel or aluminum. Low-temperature alloys are not acceptable. Include integral hinges, door latch housing, slide bolt and button, latch and keeper, combination hook and bumper and door U-shaped pulls, inside and outside for accessible compartments.

1. Hardware for accessible compartments shall not require the user to grasp or twist the door handle.

G. Anchorages and fasteners:

1. Manufacturer's standard exposed fasteners of stainless steel or brass, finished to match hardware, with theft-resistant type heads and nuts.
2. Do not use thru bolts on toilet conpartments where they would be exposed outside the compartments.
~~2.~~3. For concealed anchors, use hot-dip galvanized, cadmium-plated, or other rust-resistant protective coated steel.

2.3 FABRICATION

A. General:

1. Fabricate units with cutouts, drilled holes, and internal reinforcement to receive partition-mounted hardware, accessories, and grab bars, as indicated.
2. Exposed fasteners on the exterior of the partitions are not permitted.

B. Floor-supports:

1. Furnish galvanized steel anchorage devices complete with threaded rods, lock washers, and leveling adjustment nuts at pilasters to permit structural connection at floor.
2. Provide shoe at each pilaster to conceal anchorage.

C. Wall-hung screens: Furnish panels of same construction and finish as partition system panels. Attach to wall as specified for compartments.
D. Hardware:

1. General: Provide hardware for each compartment for disabled accessibility and as follows.

a. Hinges: Cutout inset type, adjustable to hold door open at any angle up to 90 deg. Provide gravity type, spring-action cam type, or concealed torsion rod type to suit manufacturer's standards.

b. Latch and keeper: Manufacturer's standard surface mounted latch unit, designed for disabled accessibility, with combination rubber-faced door strike and keeper.
c. Coat hook: Manufacturer's standard unit, combination hook and rubber-tipped bumper, sized to prevent door hitting mounted accessories.
d. Door pull: Manufacturer's standard unit for out-swinging doors. Provide pulls on both faces of disabled compartment doors.

PART 3 - EXECUTION

3.1 EXAMINATION

A. Examine conditions and measurements affecting the work of this Section at site.
B. Correct conditions detrimental to the proper and timely completion of this work before proceeding with installation.

3.2 INSTALLATION

A. Set compartments and screens plumb, level, and space uniformly in compliance with their manufacturer's instructions and the following.
B. Set pilasters with anchorages having not less than 2-inch penetration into structural floor, unless otherwise recommended by compartment manufacturer.

1. Level, plumb, and tighten installation with devices furnished.
2. Hang doors and adjust so that tops of doors are level with tops of pilasters when doors are in closed position.

C. Secure panels to walls with not less than 2 stirrup brackets attached near top and bottom of panel.

1. Locate wall brackets so that holes for wall anchorages occur in tile joints where applicable.
2. Secure panels to pilasters with not less than 2 stirrup brackets located to align with stirrup brackets at wall.
3. Anchor panels to studs or backing plates only; fastening components to walls with toggle bolts will not be allowed.

D. Install hardware as recommended by manufacturer. Conceal evidence of drilling in finished work.
E. Exposed fasteners on the exterior of the partitions are not permitted.

3.3 ADJUSTING/CLEANING

A. Adjust brackets and hardware to provide uniform clearances not exceeding the following dimensions:

1. Pilasters and walls: One-inch.
2. Panels and walls: One-inch.
3. Pilasters and panels: 1/2-inch.
4. Pilasters and doors: 3/16-inch.

B. Adjust hardware for proper operation. Set hinges on in-swinging doors to hold door open approximately 30 deg. from closed position when unlatched, except set hinges on out-swinging doors (and entrance swing doors) to return to fully closed position.
C. After completion of installation, clean and polish exposed surfaces and touchup minor scratches.

D. Remove and replace, at no cost to the City, components, which cannot be satisfactorily touched-up in the field, in the Design Consultant's opinion.

END OF SECTION

SECTION 10 28 00 - TOILET ROOM ACCESSORIES

PART 1 - GENERAL

1.1 SUMMARY

A. Section includes toilet accessories, including framed mirrors.
B. Related requirements:
   1. Division 01 for LEED requirements.
   2. Divisions 09 and 10 for cutouts, openings and recesses for installation of accessories.
   3. Divisions 05, 09 and 10 for supports for toilet room accessories.

1.2 SUSTAINABLE DESIGN REFERENCE

A. USG Green Building Council (USGBC).

1.3 SUBMITTALS

A. Data: Manufacturer Product Data, and illustrations, complete parts list, and installation requirements for each accessory specified.
B. Samples: Full size Samples of accessories, when requested. Samples will be returned to the Contractor.
C. Schedule: Schedule indicating types, quantities, sizes, and installation locations (by room) for each toilet accessory item to be provided for the Project.
D. LEED: LEED certification product data as specified in Section 01 81 13, “Sustainable Design Requirements”, for the following LEED credits:
   1. Credit MR 4.1 & 4.2, Recycled Content.
   2. Credit MR 5.1, Regional Materials, Manufactured Locally.
   3. Credit MR 5.2, Regional Materials, Harvested / Extracted Locally.
   4. Credit MR 6, Rapidly Renewable Materials.
   5. Credit EQ 4.1, Low Emitting Materials, Adhesives & Sealants.

1.4 QUALITY ASSURANCE

A. Compliance with CBC requirements for accessibility for accessories and their attachments is the Contractor's responsibility.

1.5 HANDLING

A. When possible, keep protective covers on accessories until their installation is complete, then remove at final cleanup.

1.6 SPECIAL WARRANTY

A. Special warranty: Provide the City the manufacturer warranty protecting mirrors against silver spoilage for 5 years after Substantial Completion.

1.7 MAINTENANCE

A. Furnish operating instructions and keys for equipment locks.

PART 2 - PRODUCTS

2.1 MANUFACTURERS

A. American Specialties, Inc.
B. Bobrick Washroom Equipment, Inc.
C. Bradley Corp.
D. Georgia-Pacific.
E. Koala Kare.
F. Or equal.

2.2 MODELS

A. As indicated in the schedule below.

2.3 MATERIALS

A. Stainless steel: AAMA Type 302/304 complying with ASTM A 167.
B. Sheet steel:
   1. Cold-rolled commercial quality, complying with ASTM A 336, 20 gage minimum.
   2. Galvanized steel: ASTM A 653 LQ, G60 zinc coating, 20 gage minimum.

C. Mirrors: 1/4-inch "Silvering Quality" float glass with silver coating, copper protective coating and 2-mil thick protective paint; complying with CS 27.
D. Mounting devices: Galvanized steel.
E. Fasteners: Spanner head design stainless steel fasteners where exposed; may be galvanized steel where concealed.

2.4 FABRICATION

A. Fabricate units with seamless one piece flanges on exposed faces.
   1. Miter corners, weld and grind smooth and flush with parent metal so that welds are invisible on exposed surfaces.
   2. Open joints (not fully welded) on exposed surfaces are not acceptable.
   3. Conceal anchoring devices.

B. Hang doors or panels on continuous stainless steel piano hinges.
C. Master-key locked dispensing units. Key coin boxes of coin-operated dispensing units separately from the lock on the unit.
D. Grind edges smooth, both inside and out.
E. Finish exposed surfaces with an AISI No. 4 finish running in the same direction (horizontal or vertical) for all accessories, except where a knurled surface is specified for grab bars.

PART 3 - EXECUTION

3.1 EXAMINATION

A. Examine adjacent construction and supports.
B. Verify that attachment surfaces are within allowable tolerances, plumb, level, clean, will provide a solid anchoring surface.
C. Correct detrimental conditions before proceeding with installation.

3.2 INSTALLATION

A. Drill holes to correct size and location. Install accessories plumb, level and equally spaced (when applicable).

1. Where accessories are attached to toilet compartments, do not “thru-bolt” but drill and tap partition reinforcement
2. Provide templates of accessories for drilling and tapping required in Section 10 21 13.

B. When installed in ceramic tile surfaces, coordinate accessory location with the tilework so that the top and one side (closest to the door) of the accessory will align with a tile joint.

C. Attach accessories plumb, level, evenly spaced where applicable, securely anchored with screws or bolts to steel studs or backing plates. Do not use Molly or toggle bolts in gypsum board.

D. Install grab bars to withstand a downward load of at least 250 lbf when tested according to method in ASTM F 446.

E. Adjust accessories for proper operation. After completion of installation, clean and polish exposed surfaces after removal of protective coverings.

3.3 ACCESSORY SCHEDULE

A. The following, with stainless steel satin finish, except for plastic liner.

1. Seat Cover and Sanitary Napkin Dispenser:

   a. Recess-Mounted: Bobrick B-3574.
   b. Surface Mounted: Bobrick B-347.

2. Seat Cover and Toilet Tissue Dispenser:

   a. Recess-Mounted: Bobrick B3474.
   b. Surface Mounted: Bobrick B-3579.

3. Soap Dispenser: Bobrick B-306.
4. Baby Changing Station: Koala Kare KB-110-SSRE.
5. Waste Receptacle: Georgia-Pacific GP 59491.
6. Plastic Liner, Gray: Georgia-Georgia Pacific enMotion 59591.
7. Towel Dispenser: Georgia-Pacific enMotion 59466.
8. Soap Dispenser: Bobrick Recessed B-306.
9. Sanitary Napkin Dispenser: Bobrick B-3500X2 50.
10. Coat Hooks:

    a. Type 1: Bobrick B-6777.
    b. Type 2: Bobrick B-6827.

11. Grab Bar: Bobrick B-6806.
12. Mirrors: 24 by 48 inches in single access restrooms.

END OF SECTION

SECTION 10 44 00 - FIRE EXTINGUISHERS AND CABINETS

PART 1 - GENERAL

1.1 SUMMARY

A. Section includes:

1. Fire extinguishers.
2. Fire extinguisher cabinets.
3. Fire extinguisher mounting brackets.

B. Related requirements:

1. Division 01 for LEED requirements.
2. Division 21 for fixed fire protection systems.

1.2 SUSTAINABLE DESIGN REFERENCE

A. USG Green Building Council (USGBC).

1.3 ADMINISTRATIVE REQUIREMENTS

A. Coordination:

1. Coordinate size of fire extinguisher cabinets to ensure that type and capacity of fire extinguishers indicated are accommodated.
2. Coordinate sizes and locations of fire extinguisher cabinets with wall depths. Final location of fire extinguisher cabinets is subject to the Fire Department's approval.
   a. Verify cabinet locations with both the Fire Department and the Design Consultant and City's Authorized Representative during the framing stage of the Project.
   b. Positioning of cabinets at locations other than where indicated shall be done at no additional cost to the City.
   c. Where extinguishers are not indicated, assume cabinet and extinguishers will be located within 75 feet of any point in the building, or at a rate of one for each 3,000 square feet of building area, or portion thereof, whichever yields the greater number of extinguishers.

1.4 SUBMITTALS

A. Data: Manufacturer product data and installation instructions for the work of this Section.

1. For fire extinguishers, submit Drawings indicating locations and type of extinguishers after approval by Fire Marshall.
2. For extinguisher cabinets, include roughing-in dimensions and details showing mounting methods, door hardware, cabinet type and materials, trim style and door construction, and materials.
3. Include color charts showing full range of manufacturer standard colors and designs available.

B. LEED: LEED certification product data as specified in Section 01 81 13, “Sustainable Design Requirements”, for the following LEED credits:

1. Credit MR 4.1 & 4.2, Recycled Content.
2. Credit MR 5.1, Regional Materials, Manufactured Locally.
3. Credit MR 5.2, Regional Materials, Harvested / Extracted Locally.
4. Credit MR 6, Rapidly Renewable Materials.
5. Credit EQ 4.1, Low Emitting Materials, Adhesives & Sealants.
6. Credit EQ 4.1, Low Emitting Materials, Paints.

C. Closeout: 2 keys for each cabinet, all keyed alike, and properly tagged.

1.5 QUALITY ASSURANCE

A. Uniformity: Provide all fire extinguishers, cabinets and accessories made by one manufacturer.
B. UL listing: Provide UL listed fire extinguishers bearing the UL "Listing Mark" for type, rating, and classification specified. Provide cabinets with the same fire-rating as walls in which they are installed.
C. NFPA compliance: Fabricate and label fire extinguishers to comply with NFPA 10, "Portable Fire Extinguishers."

1.6 SPECIAL WARRANTY~~IES~~

A. Fire extinguisher warranty:

1. Manufacturer shall ~~agrees to~~ repair or replace fire extinguishers that fail in materials or workmanship for 5 years from Substantial Completion.
2. Failures include:

a. Failure of hydrostatic test according to NFPA 10.
b. Faulty operation of valves or release levers.

PART 2 - PRODUCTS

2.1 MATERIALS

A. Cold-rolled steel sheet: ASTM A 1008, commercial steel (CS,) Type B.

B. Stainless-steel sheet: ASTM A 666, Type 304.

C. Tempered float glass: ASTM C 1048, Kind FT, Condition A, Type I, Quality q3, 3 mm thick.

2.2 MANUFACTURERS

1. JL Industries, Inc./Division of Activar Construction Products Group.
2. Larsen’s Manufacturing Company.
3. Potter Roemer (basis of design.)
4. Or equal.

2.3 FIRE EXTINGUISHERS

A. Multi-purpose dry chemical: 3A:40B:C UL rated, 6 lb. capacity, aluminum valve.
B. Halon: 2A:40B:C UL-rated, 13 lb. capacity, chrome-plated brass valve.

1. Markings:
2. Include pictorial marking system complying with NFPA 10, Appendix B and bar coding for documenting fire extinguisher location, inspections, maintenance, and recharging.
3. Label with standard warnings concerning breathing, eyes, skin and ingestion. Provide emergency and first aid procedures.

~~2.4ACCESSORIES~~

~~A.Mounting brackets (wall hooks):~~

~~1.Basis-of-design is Larsen's Model B4, or other manufacturer standard brackets of sizes required for extinguisher specified, in manufacturer standard plated finish.~~
~~2.Provide brackets for extinguishers, other than those in cabinets.~~

2.4 FIRE EXTINGUISHER CABINETS

A. Basis of design product: Potter Roemer Model Alta 7060-A-VW, recessed, stainless steel.

1. Box construction: Manufacturer standard enameled steel box. Miter and weld perimeter door and frames and grind smooth.
2. Trim: One-piece combination trim and perimeter door frame overlapping surrounding wall surface, with exposed trim face and wall return at outer edge (backbend). Miter and weld all joints.
3. Door hardware: Manufacturer standard door operating hardware and keyed lock. Provide concealed or continuous type hinge permitting door to open 180 degrees.
4. Factory-finishing:

a. After cleaning and pretreatment, apply manufacturer's baked enamel coating of the color selected by the Design Consultant from manufacturer's palette.
b. Identify fire extinguisher in cabinet with lettering spelling "FIRE EXTINGUISHER" painted on door by silk-screen process.
c. Provide vertical lettering on door as selected by Design Consultant from manufacturer's standard letter sizes, styles and layouts.

2.5 ACCESSORIES

A. Fire extinguisher mounting brackets (wall hooks):

1. Basis-of-design-products: Named manufacturer's standard brackets of sizes required for extinguisher specified, in manufacturer standard plated finish.
2. Provide brackets for extinguishers, other than those in cabinets.

PART 3 - EXECUTION

3.1 EXAMINATION

A. Examine adjacent construction and supports.
B. Verify that openings are within allowable tolerances, plumb, level, clean, will provide a solid anchoring surface.
C. Correct detrimental conditions before proceeding with installation.

3.2 INSTALLATION

A. Verify with Fire Marshal and Design Consultant each fire extinguisher cabinet location during the framing stage of the Project; location of fire extinguisher cabinets is subject to the Fire Marshal's approval.

1. Position cabinets at locations other than indicated no cost to the City.
2. Where not indicated locate, cabinets and extinguishers~~,~~ with the Design Consultant's approval, so that they can be reached within 75 feet travel distance from any point in the building, or one is available for each 3,000 square feet, whichever is more restrictive.

B. Install cabinets so that the fire and/or acoustical rating of the walls are not compromised.
C. Attach mounting brackets and fire extinguisher cabinets securely to studs or blocking~~acking plates~~, square, plumb and level, in compliance with their manufacturer's instructions; do not attach them to gypsum board with Molly or toggle bolts. Install fire extinguisher locators where indicated. Secure to supports with double-sided foam tape.

3.3 FIELD QUALITY CONTROL

A. Verify that installed extinguishers are fully charged and tagged in accordance with requirements of Authorities Having Jurisdiction.
B. Touchup damaged finish, when the results are acceptable to the Design Consultant, otherwise replace damaged components.

END OF SECTION

SECTION 10 73 16 – INSTALLING FLAGPOLE

PART 1 - GENERAL

1.1 SUMMARY

A. Section includes installing existing flagpole indicated to be relocated. Provide new foundation, electrical ground connection, anchors bolts and other accessories required for a complete installation and to meet the performance requirements specified.

B. Demolition is specified in Section 02 41 13, but removal of the existing flagpole is a responsibility of this Section which, in addition to re-installation, also includes cleaning existing flagpole and replacement of halyards and snap hooks.

C. Related requirements: Division 03 for concrete base and grout.

1.2 SUBMITTALS

A. Shop Drawings:

1. Large scale, dimensioned, showing proposed foundation, methods of anchorage and grounding of the flagpole.
2. The Shop Drawings shall be signed and stamped by a professional engineer licensed to practice in California.

1.3 QUALITY ASSURANCE

A. Subcontract the work of this Section to a firm with a minimum of 5 years' experience in installation of flagpoles.

~~A. Install the flagpole to withstand, without permanent deformation or failure, the wind loading prescribed by Code, but not less than 20 psf.~~

PART 2 - PRODUCTS

2.1 PERFORMANCE REQUIREMENTS

A. Install the flagpole to withstand, without permanent deformation or failure, the wind loading prescribed by Code, but not less than 20 psf.

2.2 FLAGPOLE

A. Existing, to be re-located. Before installation, clean flagpole with amild detergent and water, and touchup marred and abraded surfaces to match adjacent undamaged surfaces.

B. Foundation:

1. Sleeve: Tube-type formed of 16-gage galvanized, corrugated sheet steel.
2. Base plate: Square steel plate 3/8-inch thick (minimum) and 3 to 4-inch larger than foundation sleeve diameter, with 3/16-inch or 1/4-inch thick centering wedges welded to plate and sleeve.
3. Lightning protection rod: Copper-plated steel with 1/4 inch diameter copper wire bolted to flagpole with stainless steel bolt and galvanized steel washer to insulate cable lug from flagpole.

C. Sealant: As specified in Section 07 92 00.

D. Metal fabrications and bituminous coating: As specified in Section 05 50 00.

PART 3 - EXECUTION

3.1 EXAMINATION

A. Verify conditions and measurements affecting the work of this Section at site.
B. Correct detrimental conditions before proceeding with installation.

3.2 INSTALLATION

A. Coat mast sections to be encased in foundation sleeve with a heavy coating of asphalt paint both inside and out.
B. Erect flagpole in accordance with the approved shop drawings plumb, centered in foundation sleeve with temporary wood wedges with cleat located in prevailing wind direction.
C. Maximum variation from true vertical within one inch of true vertical measured at top of pole in 3 directions.
D. Fill void between flagpole and sleeve with sand and tamp firmly to hold flagpole in position.
E. Pour waterproof cement grout collar and seal with specified sealant after concrete paving is in place. Then install collar.
F. Provide positive lighting ground.
G. Adjust truck assembly and halyards to permit smooth non-binding hoisting.

~~3.3REPAIR/REPLACEMENT~~

~~A.Touchup marred and abraded surfaces to match adjacent undamaged surfaces, when the results are satisfactory to the Architect, otherwise promptly replace damaged components.~~

END OF SECTION

SECTION 10 99 00 - BUILDING SPECIALTIES

PART 1 - GENERAL

1.1 SUMMARY

A. Section includes ~~hanging system for art work~~key vault (Knox-Box.).
B. Related requirements: Division 01 for LEED requirements.

1.2 SUSTAINABLE DESIGN REFERENCE

A. USG Green Building Council (USGBC).

1.3 SUBMITTALS

A. Product Data: Manufacturer product literature and installation instructions for items specified herein.

~~B.12-inch sample of the track and one full-size sample for each accessory.~~

~~C.~~B. LEED: LEED certification product data as specified in Section 01 81 13, “Sustainable Design Requirements”, for the following LEED credits:

1. Credit MR 4.1 & 4.2, Recycled Content.
2. Credit MR 5.1, Regional Materials, Manufactured Locally.
3. Credit MR 5.2, Regional Materials, Harvested / Extracted Locally.
4. Credit MR 6, Rapidly Renewable Materials.

PART 2 - PRODUCTS

~~2.1HANGING SYSTEM FOR ART WORK~~

~~A.“W4012 Classic” wall system by AS Hanging Systems, or equal.~~

2.1 KNOX-BOX

A. 3200 Series 4-inch by 5-inch by 3-1/4-inch deep, or 4400 Series 9-1/2-inch by 9-1/2-inch by 5-inch deep by Knox Co.

~~2.2MATERIALS~~

~~A.Wall track: Extruded aluminum, finish to be selected by the Design Consultant, and complying with the following:~~

~~1.Rated strength: 300 lbs. per 72-inch track.~~
~~2.Hole pattern: 9 pre-drilled 0.16 inch holes for No. 6 screws.~~

~~B.Accessories: To be selected by the Design Consultant.~~

PART 3 - EXECUTION

3.1 EXAMINATION

A. Examine conditions and measurements affecting the work of this Section at site.
B. Correct detrimental conditions before proceeding with installation.

3.2 INSTALLATION

A. Install ~~building specialties~~ key vault in compliance with ~~their~~ its manufacturer's instructions and recommendations plumb, level and secured to the~~ir~~ supports.

3.3 FIELD QUALITY CONTROL

A. Remove protective coverings, where applicable, and clean ~~building specialties~~key vault.
B. Touchup damaged finishes, where the results are acceptable to the Design Consultant, otherwise replace with new components.

END OF SECTION

SECTION 11 51 16 - LIBRARY BOOK DEPOSITORIES

PART 1 - GENERAL

1.1 SUMMARY

A. Section includes the following:

1. Exterior in-wall book return assemblies.
2. Interior in-wall book return assembly.
3. Book carts.
4. Metal book bins.

B. Related requirements: Division 01 for LEED requirements.

1.2 SUSTAINABLE DESIGN REFERENCE

A. USG Green Building Council (USGBC).

1.3 SUBMITTALS

A. Data: Manufacturer Product Data for the book bins and book drop assemblies, including installation instructions, operation and maintenance data, details of construction-relative materials, dimensions, profiles, component parts, accessories, and finishes.

B. Shop Drawings:

1. Indicate layouts, roughing-in details, unit dimensions, required clearances, component parts, methods of field assembly and installation.
2. Show required clearances for service and operation of the assemblies.
3. Include setting drawings, templates, and directions for installing anchor bolts and other anchorages.
4. Show connection for the interior book return to the automated sorting system.

C. Samples: Submit 12-inch square Samples of each exposed finish required.

D. Maintenance data: Include operating and maintenance instructions in the maintenance manual.

E. LEED: LEED certification product data as specified in Section 01 81 13, “Sustainable Design Requirements”, for the following LEED credits:

1. Credit MR 4.1 & 4.2, Recycled Content.
2. Credit MR 5.1, Regional Materials, Manufactured Locally.
3. Credit MR 5.2, Regional Materials, Harvested / Extracted Locally.
4. Credit MR 6, Rapidly Renewable Materials.
5. Credit EQ 4.1, Low Emitting Materials, Adhesives & Sealants.
6. Credit EQ 4.1, Low Emitting Materials, Paints.

1.4 QUALITY ASSURANCE

A. Installer qualifications: Manufacturer’s authorized representative who is trained and approved for installation of library equipment.

PART 2 - PRODUCTS

2.1 MANUFACTURERS

A. Kingsley Co.
B. Tech Logic Corporation.
C. Or equal.

2.2 BOOK RETURNS

A. Basis of design for ~~exterior,~~ manual book drop inlets: Kingsley "Standard Kwik Drop Ensemble," Model 15-8950, consisting of a 2-piece through-wall system, including the following:

1. Spring-loaded deposity door and entry chute.
2. Steel chute and housing.
3. Rear cover plate.
4. Exterior faceplate with weather shroud.
5. "KwikLock" open/close lever locking system.
6. "Airbloc" systems (40 Duro Decco Neoprene rubber panels.)
7. Weatherstripping.
8. Accessories, including the following:

   a. 99-8100 – Braille label reading "Book Drop."
   b. 99-8105 – Reading "Video Drop."
   c. 99-1055A – Exterior locking cover plate.
   d. Manufacturer's standard installation and operation hardware.

B. Basis of design for interior, manual book drop inlet at the automated materials handling machine: Logi Tec "Interior Book Drop with Message Center", Model 45006796.

2.3 BOOK CARTS

A. Kingsley aluminum "High Capacity Duralight Cushion Drop II Cart" No. 37-9040, including the following:

1. 14-gage bottom with open bottom access.
2. One-inch diameter steel handle.
3. Standard float tray with 1/2-inch felt pad.
4. Cart cover.
5. Felt lining.
6. Four 3-inch, plate-mounted ball-bearing casters, non-marring, 2 swivel and 2 locking types.

B. Provide one cart for each ~~exterior~~ book drop and one at sorter.

2.4 MATERIALS

A. Aluminum sheets and plates: ASTM B 209, with manufacturer's standard black textured powder coating.
B. Stainless steel: ASTM A 240, Type 302/304, manufacturer's standard finish; do not use mild steel.
C. Wood blocking and trim: As specified in Division 06.
D. Sealants: As specified in Division 07.

PART 3 - INSTALLATION

3.1 EXAMINATION/COORDINATION

A. Examine conditions and measurements affecting the work of this Section at site.
B. Correct detrimental conditions before proceeding with installation.
C. Coordinate installation of book drop assemblies with the work of related trades for necessary rough-in work, backing, supports, anchorage and connections to automated sorting system for the interior drop.
D. Deliver backing and templates and instructions for their installations, to affected trades before related construction begins.

3.2 INSTALLATION

A. Install book drop assemblies according to approved shop drawings and manufacturer instructions, plumb, level and secure.
B. Install fasteners in precise position, flanges level, without excessive shims or calking.
C. If necessary, make adjustments to ensure that operating devices are functioning properly and as intended.

3.3 FIELD QUALITY CONTROL

A. After completing the installations, and in the presence of a City-designated representative, test moving components to ensure the proper operation of the book drop equipment and proper connection to the automated sorting equipment.
B. Demonstrate the operation of the equipment and review the maintenance data specified above with the City's personnel.
C. Instruct designated library staff members in proper use of the drop boxes, as well as providing an operator manual for staff reference.
D. After installation, restore marred or abraded surfaces to original condition using same primer used for shop painting. Make adjustments necessary for the proper operations of the equipment.

END OF SECTION

SECTION 12 24 00 - WINDOW SHADES

PART 1 - GENERAL

1.1 SUMMARY

A. Section includes ~~motorized~~ manual room darkening shades and operators.

B. Work furnished, but installed in other Sections:

1. Metal shade pockets or housings recessed into ceiling systems, and extruded aluminum ceiling pocket trim (closure) assemblies.
2. ~~Electrical control components including switches and relays necessary for control characteristics specified.~~

C. Related requirements:

1. Division 01 for LEED requirements.
2. ~~Division 26 for electrical service and connections for motor operators, controls, limit switches, and other powered devices and for system disconnect switches for motorized shade operation.~~

1.2 SUSTAINABLE DESIGN REFERENCE

A. USG Green Building Council (USGBC).

1.3 SUBMITTALS

A. Data: Manufacturer Product Data for each type of product indicated. Include styles, material descriptions, construction details, dimensions of individual components and profiles, features, finishes, and operating instructions.

1. ~~Motorized shade operators: Include operating instructions.~~
2. ~~Motors: Show nameplate data, ratings, characteristics, and mounting arrangements.~~

B. Shop Drawings: Large scale, dimensioned drawings showing location and extent of roller shades, including the following.

1. Elevations, sections, details, and dimensions not shown in product data.
2. Installation details, mountings, attachments to other work, operational clearances, and relationship to adjoining work.
3. Head, jamb and sill details as necessary to coordinate work with surrounding conditions and construction.
4. Shade schedule coordinating room number, window type, opening size(s), quantities and key to details.
5. ~~Locations and details for installing operator components, switches, and controls. Indicate motor sizes, electrical characteristics, drive arrangement, mounting, and grounding provisions.~~
6. ~~Complete wiring diagrams including connection details for components furnished under this Section.~~

C. Coordination drawings: Reflected ceiling plans drawn to scale and coordinating penetrations and ceiling-mounted items. Show the following.

1. Overall arrangement of shades and control locations.
2. Ceiling suspension system members and attachment to building structure.

3. Ceiling-mounted or penetrating items including light fixtures, air outlets and inlets, speakers, sprinklers, recessed shades and special moldings at walls, column penetrations, and other junctures of shades with adjoining construction.
4. Shade mounting assembly and attachment.
5. ~~Size and location of access to shade operator, motor, and adjustable components.~~

D. Selection Samples:

1. Three-inch by 5-inch shade cloth fabric swatches for initial fabric color selection from manufacturer's full range of available fabrics.
2. Standard aluminum finish color samples from manufacturer's range of standard colors.

E. Verification Samples:

1. One fully operational window shade assembly of each type required, 30-inch square complete with selected shade cloth including sample of seam/batten when applicable. Disassemble sample to demonstrate compliance with the requirements of this Section.
2. One complete set of all shade components, unassembled, demonstrating compliance with the specified requirements.

F. Design data, test reports, and certificates: Current reports from independent testing laboratories demonstrating specified requirements.
G. Manufacturers' instructions: Manufacturer standard installation instructions.
H. Qualification data: For Installer.
I. LEED: LEED certification product data as specified in Section 01 81 13, "Sustainable Design Requirements", for the following LEED credits:

1. Credit MR 4.1 & 4.2, Recycled Content.
2. Credit MR 5.1, Regional Materials, Manufactured Locally.
3. Credit MR 5.2, Regional Materials, Harvested / Extracted Locally.
4. Credit MR 6, Rapidly Renewable Materials.
5. Credit EQ 4.1, Low Emitting Materials, Adhesives & Sealants.
6. Credit EQ 4.1, Low Emitting Materials, Paints.

J. Maintenance data: Furnish maintenance manuals with the following information:

1. Methods for maintaining roller shades and finishes.
2. Precautions about cleaning materials and methods that could be detrimental to fabrics, finishes, and performance.
3. Operating hardware.
4. Motorized shade operator.

1.4 QUALITY ASSURANCE

A. Manufacturer qualifications: Firm with minimum 5 years experience manufacturing products comparable to those specified.
B. Installer qualifications: Firm with minimum 5 years experience, having completed installation of roller shades similar in material, design, and extent to that indicated for the Project and whose work has resulted in a record of successful in-service performance.
C. Source limitations: Obtain roller shades through one source from a single manufacturer.
D. Mockup: Build a full size shade mockup to verify selections made under sample submittals and to demonstrate aesthetic effects and qualities of materials and execution.

1. Build mockup in the location and of the size indicated or, if not indicated, as directed by the Design Consultant.

2. Approved mockup may become part of the completed Work if undisturbed at time of Substantial Completion.

1.5 HANDLING

A. Storage and protection:

1. Do not deliver items to the Project until all wet work has been completed and is dry.
2. Deliver shades to Project site in labeled protective packaging, uniquely labeled to identify each shade for each opening, using same room designations indicated and scheduled.
3. Schedule delivery to prevent delays to completion of work but to minimize on site storage time.
4. Store materials in a dry secure place. Protect from weather, surface contaminants, corrosion, construction traffic and all other potential damage.

1.6 PROJECT CONDITIONS

A. Environmental limitations: Do not install roller shades until construction and wet and dirty finish work in spaces, including painting, is complete and ambient temperature and humidity conditions are maintained at the levels indicated for Project when occupied for its intended use.

B. Field measurements:

1. Where roller shades are indicated to fit to other construction, verify dimensions of other construction by field measurements before fabrication and indicate measurements on shop drawings.
2. Allow clearances for operable glazed units' operation hardware throughout the entire operating range. Notify Design Consultant of discrepancies.

1.7 MAINTENANCE

A. Furnish extra materials described below that match products installed and that are packaged with protective covering for storage and identified with labels describing contents.

B. Before installation begins, deliver full-size units equal to 5 percent of quantity installed for each size, color, texture, and pattern indicated.

1.8 SPECIAL WARRANTIES

~~A.Shade motors and motor control system electrical components: Warranty period shall be 5 years from Date of Substantial Completion for shade motors and 2 years for all other control components containing provisions that installation will remain operational without fault for the warranty period. Include all operating parts.~~

~~B.~~A. Shade cloth and all other components of shade system to be fit for the use intended for a minimum of 10 years.

~~C.~~B. In the event of a warranted product failure, the shade manufacturer shall, at no cost to the City, facilitate acquisition and delivery of all necessary components.

PART 2 - PRODUCTS

2.1 MANUFACTURERS

A. Draper Shade & Screen Co., Inc.
B. Hunter Douglas Window Fashions.
C. Levolor Contract; a Newell Company; Joanna.
D. MechoShade (basis of design).

E. Sol-R-Veil.
F. Or equal.

2.2 ASSEMBLY

A. Model: MechoShade manually-operated ~~"ElectroShade," 1/~~double shade with sunscreen and blackout cloth on a single bracket, meeting the following requirements:

1. Pre-engineered unit with one piece molded sprockets and a linear disc brake opposed to a flat steel backing plate and concealed variable adjustment mechanism.
2. Shade mechanism shall be adjustable from 100 percent friction (static mode) with infinite positions to 15 percent friction (dynamic mode with only pre-selected positions.
3. The operator shall be a side-mounted gear and sprocket mechanism located within the drive-end bracket, and equipped with an endless chain.
4. Provide all shades with operators mounted on the right hand side when looking at the shade form iside the building.
~~4.~~5. System shall allow for the following:

a. Removal of shade roller tube from brackets without removing hardware from opening or without requiring end or center support brackets to be removed.
b. Field adjustment ~~of motor~~ or replacement of operable hardware component without requiring removal of brackets ~~regardless of mounting position (inside or outside mount)~~.
c. Removable regular roll fascia(s) mounted continuously across two or more shades without requiring exposed fasteners.
~~d.Operation of multiple shade bands offset by a maximum of 12 degrees from the motor axis between shade bands, 6 degrees on each side of the radial line, by a single motor (multi-banded shades) subject to manufacturer's design criteria. Multi-banding shall occur throughout.~~
~~e.~~d. Positive mechanical engagement of drive mechanism to shade roller tube. ~~Do not rely on friction fit connections for drive mechanism to shade roller tube.~~

B. Materials, general:

1. Flame-resistance ratings that pass NFPA 701, as determined by testing identical products by UL or another testing and inspecting agency acceptable to authorities having jurisdiction.
2. Tested in accordance with University of Pittsburgh Toxicity Protocol including LC50 analysis and toxicity characteristics.
3. 100 percentage polyester core yarn. Fiberglass content in shade cloth is unacceptable.
4. ASTM G 22 results for ATCC6538 (Staphylococcus aureus) and ATCC13388 (Pseudomonas aeruginosa) indicating minimum 5mm 'No Growth Contact Area'.
5. ASTM G 285 results for ATCC9642, ATCC9644, ATCC9348 and ATCC9645 indicating "No Growth."
6. Antimicrobial without topical treatment. NY State Fire-Gas Toxicity Text: LC50 22.5 g.
7. ASTM E 84: Flame Spread 17, Smoke Density Index 118, Shade cloth seconds are not acceptable.
8. Total hanging weight of shade band shall not exceed 80 percentage of the rated lifting capacity of the shade motor and tube assembly.

C. Sunscreen: ThermoVeil, 1000 series, visually transparent single-thickness fabric shade cloth: Non-raveling 0.030-inch thick vinyl fabric, woven from 0.018-inch diameter extruded vinyl yarn comprising of 15 percent polyester and 85 percent reinforced vinyl, complying with the following:

1. Colors: White 0891 or pearl grey 0893, as selected by the Design Consultant.

D. Blackout cloth: Acoustical Dimount 0890 series. Fiberglass coated fabric, 12 mils thick, 62 threads per square-inch minimum, 0.750 psi minimum, washable and colorfast, passed FR tests CCC-C-521E, ASTM E 84, ASTM E 162 and NFPA 701 Large-small scale.

E. Hembars and hempockets:

1. Seams: RF-welded (including welded ends) and concealed hemweights.
2. Hemweights of appropriate size and weight for shade band and must be continuous inside a sealed hempocket.
3. Match hempocket construction for all shades in same rooms.

F. Shade roller and shade cloth attachment:

1. Extruded aluminum shade roller tube of diameter and wall thickness required to support shade fabric without (excessive) deflection. ~~Roller tubes less than 1-1/2-inches diameter are not acceptable.~~
2. Provide for positive mechanical engagement with drive / brake mechanism.
3. Provide for positive mechanical attachment of shade band without requiring use of adhesives, adhesive tape, staples or rivets. ~~Two sided pressure sensitive adhesive tape is not acceptable.~~
4. Attach shade bands to tube such that removal and replacement of a shade band can be accomplished without removing either the tube from the brackets or without removing shade brackets. Shade bands must be replaceable on site.

~~2.3SHADE MOTORS AND MOTOR CONTROL SYSTEM (IQ/MLC SYSTEM)~~

~~A.MechoShade Systems, Inc. IQ/MLC motor control system.~~

~~B.Electrical components, general: Listed and labeled as defined in NFPA 70, Article 100, by a testing agency acceptable to authorities having jurisdiction, and marked for intended use.~~

~~C.Motors:~~

~~1.Tubular, asynchronous motors with built-in reversible capacitor operating at 110V AC (60hz), single phase, temperature Class A, thermally-protected, totally enclosed, maintenance free with line voltage power supply equipped with locking disconnect plug assembly furnished with each motor.~~

~~2.Conceal shade motors inside shade roller tube.~~

~~3.Each shade motor draws a maximum current of 2.3 amps.~~

~~4.Use motors rated at the same nominal speed for all shades in the same room.~~

~~D.Wall switches:~~

~~1.Three-button flush-mounted switches with metal cover plates and no exposed fasteners.~~

~~2.Connect local wall switches to control system components via low voltage (12V DC) 4 conductor modular cable equipped with RJ-11 type connectors specified in Division 16.~~

~~3.Connect master wall switches to control system components via low voltage (12V DC) 6-conductor modular cable equipped with RJ-12 type connectors specified in Division 16.~~

~~E.Motor control system:~~

~~1.Provide power to each shade motor via individual 3 conductor line voltage circuits connecting each motor to the relay based controllers (IQ/MLC).~~

~~2.Control system components provide appropriate (spike and brown out) over-current protection (plus or minus 10 percentage of line voltage) for each of the 4 individual motor circuits and shall be rated by UL or ETL as a component of this system.~~

~~3.Motor control system allows each group of four shade motors to be controlled by each of four local switch ports, with up to fourteen possible "sub-group" combinations via local 3-button wall switches and all at once via a master 3-button switch. System shall allow for overlapping switch combinations from 2 or more switches.~~

~~4.Multiple "sub-groups" from different IQ/MLC control components may be combined to form "groups" operated by a single 3-button wall switch.~~

~~5.Each shade motor shall be accessible (for control purposes) from up to four local switches and one master switch.~~

~~6.Control system shall allow for automatic alignment of shade hembars at 25 percent, 50 percent and 75 percent of opening heights, or up to 3 user defined intermediate stopping positions in addition to all up/all down positions regardless of shade height. Control system shall allow shades to be stopped at any point in the opening height.~~

~~7.Control system shall have 2 standard operating modes: "Normal Mode" allowing the shades to be stopped anywhere in the opening height and "Uniform Mode" allowing the shades to only be stopped at the predefined intermediate stop positions. Both modes shall allow for all up/all down positioning.~~

~~8.Control system components shall allow for interface with low voltage Audio Visual system components via a dry contact terminal block.~~

~~9.Control system components shall allow for interface with external analog input control devices such as solar activated controllers, wind activated controllers, 24-hour timers, etc. via a dry contact terminal block.~~

~~10.Reconfiguration of switchable groups, as specified above, shall not require rewiring of the hardwired line voltage motor power supply wiring or the low voltage control wiring.~~

2.3 ACCESSORIES

A. Shade pockets for recessed mounting in acoustical ceilings: Extruded aluminum shade pocket with exposed extruded aluminum removable closure panel to provide access to shades and an exposed tile support (MechoShade 4123 pocket in manufacturer standard painted finish) for acoustical tile ceilings.

2.4 FABRICATION

A. Fabricate units to completely fill existing openings from head to sill and jamb-to-jamb, unless specifically indicated otherwise. Comply with manufacturer's edge clearance standards and recommendations.

B. Fabricate shade cloth to hang flat without buckling or distortion. Fabricate with heat-sealed trimmed edges to hang straight without curling or raveling. Fabricate unguided shade cloth to roll true and straight without shifting sideways more than 1/8-inch in either direction per 8 feet of shade height due to warp distortion or weave design.

C. Provide battens ~~in non-railroaded shades~~ to assure proper tracking and uniform rolling of the shade bands.

D. Provide batten pockets utilizing self-colored fabric front and back, RF welded into the shade cloth. Provide a self-colored opaque liner front and back to eliminate any see through of the batten pocket that shall not exceed 1-1/2 inches high and be totally opaque. Reinforce batten pockets using coil coated, roll formed spring steel to insure flatness of shade bands in accordance with manufacturer's standards. Design formed profile of batten stiffeners to be compatible with diameter of shade roller tube.

~~2.6~~2.5 FINISHES

A. Aluminum components: Clear, anodized, unless otherwise indicated otherwise.

B. Steel components: Cadmium-plated, satin-finished, or bonderized prior to painting with Manufacturer's standard baked-enamel finish.

PART 3 - EXECUTION

3.1 EXAMINATION

A. Examine substrates, areas, and conditions for installation tolerances, operational clearances, ~~accurate locations of connections to building electrical system,~~ and other conditions affecting performance.
B. Correct detrimental conditions before proceeding with installation.

3.2 SHADE INSTALLATION

A. Install shades in accordance with the approved shop drawings and their manufacturer's instructions for the type of mounting and operation required.
B. Mount units plumb, level, and securely anchored in place with recommended hardware and accessories to provide smooth operation without binding.
C. Install units within the following tolerances:

1. Maximum variation of gap at window opening perimeter: 1/4-inch, per 8 feet (plus or minus 1/8-inch) of shade height.
2. Maximum offset from level: 1/16-inch per 5 feet of shade width.

D. Allow clearances for window operation hardware.
~~E.Connect motorized operators to building electrical system.~~

3.3 ADJUSTING

A. Adjust and balance shades to operate smoothly, easily, safely, and free from binding or malfunction throughout entire operational range.

3.4 CLEANING AND PROTECTING

A. Clean shade surfaces after installation in compliance with their manufacturer's instructions.
B. Provide final protection and maintain conditions, in a manner acceptable to manufacturer and installer that ensure that shades are without damage or deterioration at Substantial Completion.
C. Replace damaged shades that cannot be repaired, in a manner approved by Design Consultant, before Substantial Completion.

3.5 FIELD QUALITY CONTROL

A. Upon completion of installation, operate each shade twice ~~conduct tests~~ to ensure their proper operation ~~of the shades~~.
B. Adjust and lubricate as required for safe and efficient operation.
C. Review the maintenance data specified in Paragraph 1.2, B above with the City's representative.
D. Restore marred or abraded surfaces to original condition using same primer used for shop painting.

3.6 DEMONSTRATION

A. ~~Engage a factory authorized service representative~~ Demonstrate operation of the shades to ~~train~~ City's maintenance personnel, as well as ~~to~~ adjusting, ~~operate,~~ and maintainance of the assemblies.

END OF SECTION

SECTION 12 48 16 – FLOOR MATS

PART 1 - GENERAL

1.1 SUMMARY

A. Section includes entry mats with carpet inserts, ~~recessed~~ aluminum frames and accessories recessed in concrete floors and on access flooring.
B. Related requirements:

1. Division 01 for LEED requirements.
2. Division 09 for access flooring.

1.2 SUSTAINABLE DESIGN REFERENCE

A. USG Green Building Council (USGBC).

1.3 SUBMITTALS

A. Data: Manufacturer product data, including specifications, roughing-in diagrams, and installation instructions for the grilles.
B. Samples: 12-inch square samples of carpet inserts in aluminum frame.
C. LEED: LEED certification product data as specified in Section 01 81 13, “SUSTAINABLE DESIGN REQUIREMENTS”, for the following LEED credits:

1. Credit MR 4.1 & 4.2, Recycled Content.
2. Credit MR 5.1, Regional Materials, Manufactured Locally.
3. Credit MR 5.2, Regional Materials, Harvested / Extracted Locally.
4. Credit MR 6, Rapidly Renewable Materials.

PART 2 - PRODUCTS

2.1 MANUFACTURERS

A. Tire-Tex.
B. Or equal.

2.2 MATERIALS

A. Frame: 3/8-inch deep, 6063-T6 aluminum alloy.
B. Carpet inserts: 12-inch square by 3/8-inch carpet tiles consisting of recycled truck tires with reinforced rubber backing.

PART 3 - EXECUTION

3.1 EXAMINATION

A. Examine conditions, surfaces and supports under which the work of this Section will be installed.
B. Correct conditions detrimental to the proper and timely completion of this work before proceeding with installation.

3.2 INSTALLATION

A. Install recessed mat frames in accordance with manufacturer's instructions securely, square and level, with tight joints to frame.
B. Set mat tops at height recommended by manufacturer for most effective cleaning action; coordinate top of mat surfaces with bottom of doors that swing across mats to provide clearance between door and mat.
C. Install necessary shims, spacers, and anchorages for proper location and secure attachment of frames.
D. On access flooring install frame and mats in accordance with the approved shop drawings, securely and straight, with mat surfaces flush and level with access flooring surface.
E. On concrete floors install grout and fill around frames and, if required to set mat tops at proper elevations, in recesses under mats. Finish grout and fill smooth and level.
F. Coat aluminum surfaces that will be in contact with concrete with a heavy coating of bituminous paint.
G. Floor mats shall remain immobile at each location under any traffic condition.
H. Touchup minor damage or replace damaged parts as directed by the Design Consultant.

END OF SECTION

SECTION 12 93 00- SITE FURNISHINGS

PART 1 - GENERAL

1.1 RELATED DOCUMENTS

A. Drawings and general provisions of the Contract, including General and Supplementary Conditions and Division 01 Specification Sections, apply to this Section.

1.2 SUMMARY

A. This Section includes the following:

1. Seat wall with wood bench, type 2

2. Seat wall with wood bench, type 3

3. Picnic table

4. Bench

~~1.~~5. Trash receptacle

~~2. Picnic table/bench sets~~

~~3. Precast concrete bench with lumber top~~

B. Related Sections include the following:

1. Division 03 Section "Landscape Architectural Concrete" for [installation of pipe sleeves cast] [installation of anchor bolts cast] [formed voids] in concrete footings.

2. Division 31 Section "Earth Moving" for excavation for installation of concrete footings.

3. Division 32 Section "Decorative Concrete Paving"

4. Division 32 Section "Decorative Concrete Paving"

5. Division 32 Section “Lithocrete architectural concrete paving”

6. Division 32 Section "Boulders" for benches to be installed on boulders

7. Section 01 81 13, “SUSTAINABLE DESIGN REQUIREMENTS”: LEED Requirements.

1.3 REFERENCES

A. US Green Building Council (USGBC), www.usgbc.org

1.4 SUBMITTALS

A. Product Data: For each type of product indicated.

B. Samples for Initial Selection: For units with factory-applied color finishes.

C. Samples for Verification: For each type of exposed finish required, prepared on Samples of size indicated below.

1. Size: Not less than 6-inch- long linear components and 4-inch- square sheet components.

D. Product Schedule: For site furnishings. Use same designations indicated on Drawings.

E. Material Certificates: For site furnishings, signed by manufacturers.

1. Wood Preservative Treatment: Include certification by treating plant stating type of preservative solution and pressure process used, net amount of preservative retained, and compliance with applicable standards.

2. Sustainably Harvested Wood: Include certification by manufacturer and from sources that participate in sustained yield programs.

3. Recycled plastic.

F. Maintenance Data: For site furnishings to include in maintenance manuals.

G. LEED certification product data as specified in Division 1, Section 01 81 13, “SUSTAINABLE DESIGN REQUIREMENTS”, for the following LEED credits:

1. Credit MR 4.1 & 4.2, Recycled Content

2. Credit MR 5.1 & 5.2, Regional Materials, Manufactured & Harvested / Extracted Locally

3. Credit MR 7, Certified Wood

4. Low Emitting Materials, Paints 9if filed applied painting)

1.5 SITE CONDITIONS

A. Prior to commencing with work, review on site grading conditions, including sub grade conditions, verify the elevations, and dimensions, and notify the’s Representative of unsatisfactory conditions. Proceeding with the work constitutes acceptance of existing or corrected conditions.

1.6 QUALITY ASSURANCE

A. Source Limitations: Obtain each type of site furnishing(s) through one source from a single manufacturer.

1.7 EXTRA MATERIALS

A. Furnish extra materials described below that match products installed and that are packaged with protective covering for storage and identified with labels describing contents.

1. Bench Replacement Slats: No fewer than two full-size units for each size indicated.

2. Anchors: For each product specified.

PART 2 - PRODUCTS

2.1 ~~Trash receptacle~~Seat wall with wood bench, type 2: See landscape drawings for type

2.2 Seat wallwith wood bench, type 3 ~~Picnic table/bench sets~~: See landscape drawings for type

2.3 Picnic Table: ~~Precast concrete bench with lumber top~~: See landscape drawings for type

2.4 Bench: See landscape drawings for type

~~2.3~~ Trash Receptacle: See landscape drawings for type

~~2.4~~

PART 3 - EXECUTION

3.1 EXAMINATION

A. Examine areas and conditions, with Installer present, for compliance with requirements for correct and level finished grade, mounting surfaces, installation tolerances, and other conditions affecting performance.

1. Proceed with installation only after unsatisfactory conditions have been corrected.

3.2 INSTALLATION, GENERAL

A. Comply with manufacturer's written installation instructions unless more stringent requirements are indicated. Complete field assembly of site furnishings where required.

B. Unless otherwise indicated, install site furnishings after landscaping and paving have been completed.

C. Install site furnishings level, plumb, true, and securely anchored at locations indicated on Drawings.

D. Post Setting: Set cast-in support posts in concrete footing with smooth top, shaped to shed water. Protect portion of posts above footing from concrete splatter. Verify that posts are set plumb or at correct angle and are aligned and at correct height and spacing.

Hold posts in position during placement and finishing operations until concrete is sufficiently cured.

E. Posts Set into Voids in Concrete: Form or core-drill holes for installing posts in concrete to depth recommended in writing by manufacturer of site furnishings and 3/4 inch larger than OD of post. Clean holes of loose material, insert posts, and fill annular space between post and concrete with nonshrink, nonmetallic grout or anchoring cement, mixed and placed to comply with anchoring material manufacturer's written instructions, with top smoothed and shaped to shed water.

F. Pipe Sleeves: Use steel pipe sleeves preset and anchored into concrete for installing posts. After posts have been inserted into sleeves, fill annular space between post and sleeve with nonshrink, nonmetallic grout or anchoring cement mixed and placed to comply with anchoring material manufacturer's written instructions, with top smoothed and shaped to shed water.

3.3 ACCEPTANCE

A. Inspection for acceptance of the placement and installation of the furnishings and equipment shall be performed by the ~~Owner's Representative~~Design Consultant. Provide notification at least forty (48) hours prior requested inspection time and date.

3.4 CLEANING

A. After completing site furnishing installation, inspect components. Remove spots, dirt, and debris. Repair damaged finishes to match original finish or replace component.

END OF SECTION

SECTION 10 93 13 - BICYCLE PARKING DEVICES

PART 1 - GENERAL

1.1 SUMMARY

A. Section includes:

1. Free-standing bicycle racks.
2. Steel tube loops.

B. Related requirements: Bicycle lockers.

1.2 SUBMITTALS

A. Data:

1. Manufacturer Product Data for ~~each~~ device, including finish. and including test results for anchors in concrete and at vertical canopy supports.
2. Samples of sufficient size showing proposed finish on base metal.

PART 2 - PRODUCTS

2.1 BICYCLE RACK

A. Manufacturers:

1. Kay Park Recreation Corp. (basis of design.)
2. Porter.
3. LA Steelcraft Products.
4. Or equal.

B. Model: 625CIG:

1. Mounting: In-ground.
2. Materials: 2-3/8-inch o.d., schedule 40 pipe.
3. Finish: Powder coated, color No. 7039.
4. Number of loops: 5
5. Number of spaces: 7

C. Anchors: Select anchors with capability to sustain, without failure, a load equal to 4 times the load imposed when installed in concrete, as determined by testing per ASTM E 488.

1. Drilled-in expansion anchors: Expansion anchors complying with FS FF-S-325, Group VIII (anchors, expansion, [non-drilling]), Type I (internally threaded tubular expansion anchor); and machine bolts complying with FS FF-B-575, Grade S, by Hilti, Inc., ITW Ramset/ Red Head, Star Expansion Co. or The Rawlplug Co., Inc.

D. Chemical anchors: Chem-Stud by Rawlplug Co., Inc. or HIT C-100 System by Hilti used with machine bolts complying with FS FF-B-575, Grade S.

2.2 STEEL TUBE LOOPS

A. 1-1/2-inch galvanized, steel tube loops, painted to match vertical canopy supports.

1. Shape and height: As indicated on the Drawings.

PART 3 - EXECUTION

3.1 EXAMINATION

A. Verify conditions and measurements affecting the work of this Section at site.
B. Correct detrimental conditions before proceeding with installation.

3.2 INSTALLATION

A. Coordinate installation of bike racks with the work of Section 03 30 00.
B. Coordinate welding of steel tube loops to vertical canopy supports with Division 05 requirements.
C. Install parking devices at locations indicated on Drawings in compliance with their manufacturer's instructions and recommendations, plumb, level and securely anchored.

END OF SECTION

SECTION 12 93 15 - BICYCLE LOCKERS

PART 1 - GENERAL

1.1 SUMMARY

A. Section includes exterior metal bicycle storage units.
B. Related requirements: Division 01 for LEED requirements.

1.2 SUSTAINABLE DESIGN REFERENCE

A. USG Green Building Council (USGBC).

1.3 SUBMITTALS

A. Data: Manufacturer's Product Data for the lockers.
B. Shop Drawings: Show assembly and installation details. Include physical characteristics such as shape, dimensions, bicycle parking capacity and finish.
C. Selection Samples: For each finish product specified, two complete sets of color chips representing manufacturer's full range of available colors and patterns.
D. Samples: Locker manufacturer’s standard size custom color Samples representing actual product, color and texture, including clear graffiti-resistant coating. Approved sample will serve as Design Consultant’s control sample.
E. LEED: LEED certification product data as specified in Section 01 81 13, “Sustainable Design Requirements”, for the following LEED credits:

1. Credit MR 4.1 & 4.2, Recycled Content.
2. Credit MR 5.1, Regional Materials, Manufactured Locally.
3. Credit MR 5.2, Regional Materials, Harvested / Extracted Locally.
4. Credit MR 6, Rapidly Renewable Materials.
5. Credit EQ 4.1, Low Emitting Materials, Adhesives & Sealants.
6. Credit EQ 4.1, Low Emitting Materials, Paints.

F. Maintenance Data: Recommended methods for repairing damage to the powder coat finish.

1.4 QUALITY ASSURANCE

A. Manufacturer qualifications: Firm experienced in manufacturing bicycle lockers similar to those required for this project and with a record of successful in-service performance.
B. Installer qualifications: Licensed and experienced installer who has completed installation of bicycle lockers similar in material, design and extent to those indicated for this project and whose work has resulted in construction with a record of successful in-service performance.
C. Source limitations: Obtain bicycle lockers from a single source with resources to provide components of consistent quality in appearance and physical properties.
D. Mockup: Provide a mockup for evaluation of materials and application workmanship.

1. Install in area designated by Design Consultant.
2. Do not proceed with remaining work until workmanship is approved by Design Consultant.
3. Refinish mockup installation as required to produce acceptable work.
4. Approved mockup may remain a part of the Work after acceptance

1.5 HANDLING

A. Deliver in original, unopened packaging. Protect from damage and dampness.
B. Deliver materials to the site in undamaged condition. Store materials to protect materials against damage from moisture, heat, cold, direct sunlight or other damaging causes.
C. Store products in manufacturer's unopened packaging until ready for installation.

PART 2 - PRODUCTS

2.1 MANUFACTURERS

A. Belson Outdoors, Inc.
B. DuraBike Locker Co., Division of Hannan Specialties, Inc.
C. Or equal.

2.2 MODEL

A. Design is based on Dura Bike Locker DL100-2, , factory-painted ~~standard~~ locker modified for stacking, with divider panel and 2 doors perforated for ventilation.

2.3 COMPONENTS/MATERIALS

A. Exterior walls, tops and doors (ASTM A 591): 16 gage galvanized steel with 16- gage horizontal galvanized steel stiffener for doors.
B. Full length door hinge (ASTM A 314): 16-gage stainless steel.
C. Corners and floors (ASTM A 591): 14 gage galvanized steel, with 6 punched-in louvered vents at corners. Floors shall have built-in longitudinal roll-formed stiffeners at 13 inches o.c.
D. Latch corner gusset: Punched-in ringlet for cable chain.
E. Divider panels (ASTM A 591): 18-gage galvanized steel.
F. Hangers: Include interior hangers for riding gear.
G. Locking bar mechanism (ASTM A 1018): One inch wide by 1/4 inch thick zinc-plated steel flat bar running beyond the full length of the door and into the top, floor and jamb (3-points to insure Maximum Security.)
H. Fasteners: Zinc-coated steel, applied from the inside.
I. Custom finish: Locker unit manufacturer’s custom color with a clear graffiti-resistant coating, color to match Design Consultant’s control sample.

PART 3 - EXECUTION

3.1 EXAMINATION/PREPARATION

A. Examine conditions and measurements affecting the work of this Section at site.
B. Correct conditions detrimental to the proper and timely completion of this work before proceeding with installation.

3.2 INSTALLATION

A. Install lockers where indicated in accordance with their manufacturer’s instructions plumb, level and solidly anchored.

3.3 FIELD QUALITY CONTROL

A. Protect installation against damage and staining during subsequent construction operations until Substantial Completion.
B. Touchup damaged surfaces to the Design Consultant's satisfaction, or return the damaged item to the factory for repair or replacement before Substantial Completion.

END OF SECTION

SECTION 13 31 23 - FABRIC CANOPY

PART 1 - GENERAL

1.1 SUMMARY

A. Section includes design/build exterior fabric canopy.

1. Design (within the sizes and profiles limitations shown), fabrication, assembly and installation of fabric structure, including primary supports and foundations.
2. The intent of this specification is to establish an undivided, single-source responsibility for the above functions.
3. In addition, the Contractor's responsibilities also include:

   a. Filing Shop Drawings and other documents, obtaining necessary permits from the Building Department, and paying fees therefore.
   b. Obtaining approval for the canopy fabric by the Santa Monica Fire Department.

B. Work includes, but is not necessarily limited to the following:

1. Architectural membrane.
1. Cables and end fittings.
2. Perimeter, catenary, and sectionalized clamping system.
3. Structural steel supports as indicated on the drawings.
4. Fasteners and gasketing.
5. Coordination of wiring for outlets at canopy supports.
6. Coordination with pole-mounted lighting.

C. Related requirements:

1. Division 01 for LEED requirements.
2. Division 03 for concrete embeds of steel supports.
3. Division 26 for electrical and lighting work installed on canopy supports.

1.2 SUSTAINABLE DESIGN REFERENCE

A. USG Green Building Council (USGBC).

1.3 ADMINISTRATIVE REQUIREMENTS

A. The work of this Section requires deferred approval and delegates design to the Contractor. It is not fully detailed on the Drawings which indicate desired profile and design intent, and it has not been engineered.

1. The Contractor is responsible for engineering, fabrication and installation of the work of this Section to withstand loads and other criteria prescribed by Code, indicated, and specified, within the physical limitations indicated on the Drawings.
2. The Contractor's responsibility also include the attacchment of the canopy to the building (with necessary brackets andd anchors,
3. A California-licensed professional engineer with experience in fabric structure, employed by the Contractor, shall prepare drawings and calculations for this work. Drawings and calculations shall be sealed and signed by the Contractor's design engineer.

~~A.~~B. ~~Prepare structural calculations and other submittals required by authorities having jurisdiction, and these Specifications.~~

~~B.Filing shop drawings and other documents and obtaining necessary permits from the Building Department, and paying all fees therefore.~~

~~Obtaining approval for the canopy fabric by the Santa Monica Fire Department.~~

1.4 SUBMITTALS

A. Data: Include manufacturer's specifications for materials, fabrication, installation, and recommendations for maintenance.

1. Include test reports showing compliance with Project requirements where test method is indicated.

2. Include preliminary reaction loads imparted by the fabric canopy to its attachment points.

B. Shop Drawings:

1. Large scale, dimensioned shop drawings for the fabric structure. Include complete details and schedules for fabrication and shop assembly.
2. Procedures and diagrams showing the sequence of erection.
3. Seaming methods and diagrams.

C. Samples: Samples of fabric, minimum 36-inch square, and full size samples of each type of hardware, cables and accessory.

D. Structural calculations: Signed and sealed by a California-registered structural engineer specializing in fabric structure design and engineering.

E. Certificates: Full certification, including cable physical data, mill test reports, and reports from pre-stretching and end fitting testing.

F. LEED: LEED certification product data as specified in Section 01 81 13, “Sustainable Design Requirements” for the following LEED credits:

1. Credit MR 4.1 & 4.2, Recycled Content.
2. Credit MR 5.1, Regional Materials, Manufactured Locally.
3. Credit MR 5.2, Regional Materials, Harvested / Extracted Locally.
4. Credit MR 6, Rapidly Renewable Materials.
5. Credit EQ 4.1, Low Emitting Materials, Adhesives & Sealants.
6. Credit EQ 4.1, Low Emitting Materials, Paints.

1.5 QUALITY ASSURANCE

A. Design criteria: Design the structure to withstand the loads prescribed by Code.

1. Life safety: All tensile membrane structures shall be designed so that no life safety issue is created in the event of a loss of a part of the membrane.
2. The stability ~~The tensile membrane structure~~ of the assembly shall not rely on the membrane for structural stability.

B. Source quality control:

1. Materials and fabrication procedures are subject to inspection and tests in the mill, shop or yard at the Design Consultant’s option. Such inspections and tests will not relieve the Contractor of responsibility for providing materials and fabrication procedures in compliance with specified requirements.
2. Materials and fabrication procedures shall comply with Code and regulations of ~~Authorities Having Jurisdiction.~~
3. Obtain primary membrane materials from one manufacturer.

7. Fabricator/installer qualifications: Fabricator/installer shall demonstrate that it has a fabrication facility of adequate capacity and has maintained a staff experienced in the fabrication of tensile membrane structures who will undertake the fabrication of this project.

1.6 HANDLING

A. Protected materials from damage and defacement.
B. Store off the ground out of harm's way.

PART 2 - PRODUCTS

2.1 FABRIC CANOPY ASSEMBLY

A. Steel-supported fabric structure complying with the following requirements:

1. Fire resistance of roof coverings (ASTM E 108):

a. Spread of flame: Class A.
b. Intermittent flame: Class A.
c. Burning brand: Class A.

2. Incombustibility of substrates (ASTM E 136): Substrate noncombustible; Pass.
3. Flame resistance (NFPA 701 Small Scale, UL 94):

a. Flame out: One second after.
b. Char length: 0.25-inch maximum.

2.2 MANUFACTURERS

A. ACS Productions, Inc.
B. Eide Industries, Inc.
C. FabriTec (basis of design.)
D. Ronstan International.
E. Shade Sails LLC.
F. Span Systems, Inc.
G. Taiyo Birdair.
H. Or equal.

2.3 MATERIALS

A. Structural supports and anchors: As specified in Section 05 20 00.
B. Fabric: Ferrari Soltis 92, Twitchell Textilene 90, or equal PVC-coated polyester.

1. Color: Custom color ~~TBD~~as selected by the Design Consultant.
2. Shape: Flat "hypar style."

C. Hardware and accessories: Type 302/~~3~~-304, polished stainless steel components consisting of cables clamps, fittings, fasteners and gasketing, and meeting the following requirements:

1. Structural wire rope cables: ASTM A 603.
2. Structural strand cables: ASTM A 586.
3. Drainage hole grommets: Canopy manufacturer's standard types.

2.4 FABRICATION

A. Membrane:

1. Take necessary care to plan and assemble the fabricated sections such that the assembly has no shop patches. Splices, if any, shall be patterned into a symmetrical and repetitive geometric arrangement within the assembly, shown on the shop drawings and, where feasible, hidden by structural members.
2. Fabricated joints shall have a minimum of 90 percent of the total strength of the coated membrane in strip tensile testing. Structural joints shall be fused in accordance with industry standards and shall maintain the integrity of the coating.
3. Biaxial test: At least one representative sample of the outer membrane shall be biaxially test loaded. Membrane compensation in patterning shall be based upon the results of the biaxial test loading.

B. Metal components: Members, when finished, shall be true and free of twists, bends, and open joints between the component parts. Members shall be ~~thoroughly~~ straightened in the shop by methods that will not injure them, before being worked on in any way.

1. Permanently mark end fittings with the mark number and “X” and “Y” end designations.
2. Attach a metal tag indicating the cable length and mark number to each cable assembly.

PART 3 - EXECUTION

3.1 ~~INSPECTION~~EXAMINATION

A. Examine the conditions under which this work is to be performed ~~and correct unsatisfactory conditions~~.
B. Correct unsatisfactory conditions before proceeding with installation.

3.2 ERECTION

A. Comply with the membrane manufacturer’s recommendations, the approved Shop Drawings and the applicable requirements of Authorities Having Jurisdiction.
B. Erect the tensile membrane structure free of any areas where membrane prestress is not induced.
C. Erection tolerances shall ~~be specified in~~ comply with the AISC "Code of Standard Practice for Steel Buildings and Bridges", unless otherwise indicated,
D. After installation, restore marred or abraded surfaces to original condition using same paint or coating as factory-applied finishes, when the results are acceptable to the Design Consultant, otherwise replace damaged materials.

END OF SECTION

SECTION 21 10 00 - FIRE PROTECTION

PART 1 - GENERAL

1.1 APPLICABLE REQUIREMENTS

A. All work to be furnished and installed under this section shall comply with all the requirements of General Conditions, Supplemental Conditions, Division 01 - General Requirements, Section 210500 - Basic Materials and Methods, and other Sections in Division 21 specified herein.

1.2 DEFINITIONS

A. Pipe sizes used in this Section are nominal pipe size (NPS) specified in inches.

B. Working plans as used in this Section refer to documents (including drawings and calculations) prepared pursuant to requirements in NFPA 13 for obtaining approval of authority having jurisdiction.

C. NICET - National Institute For Certification In Engineering Technologies

D. Other definitions for fire protection systems are included in referenced NFPA standards.

1.3 DESCRIPTION OF WORK

A. The work includes ~~<< designing>> <<~~new~~>> <<the removing and modifying existing and>>,~~ providing and installing a complete and fully operable automatic sprinkler system as described in this Section of the Specification and as shown on the contract construction drawings and shall be in accordance with rules, regulations and standards as required by the following authorities having jurisdiction.

~~1.~~ State of ~~<<Oregon>><<Washington>><<~~California~~>>.~~
~~2.~~ City of ~~<<~~Santa Monica ~~? >>.~~
~~3.~~1. Building Department.
~~4.~~2. Fire Prevention Division, Fire Marshal's Office.

B. Work to be in accordance with criteria of the following design and installation standards:

~~1. State of <<Oregon>> <<Washington>> Structural Specialty Code.~~
~~2.~~1. National Fire Protection Association.
a. No. 13 - Sprinkler Systems ~~<<1999 (~~for California~~) 2002 (for Federal)>>~~
~~b. No. 14 - Standpipes & Hose Systems.~~
~~c. No. 20 - Fire Pumps~~
~~d. No. 22 - Water Tanks.~~
~~e. No. 24 - Private Fire Service Mains.~~
~~f.~~b. No. 70 - National Electrical Code.
~~g.~~c. No. 101-Life Safety Code.
~~3.~~ <<Uniform Fire Code (UFC), with latest amendments~~.>> <<~~International Fire Code (IFC) with state amendments~~.>>~~
~~4.~~ ~~<<~~Uniform Building Code (UBC), Latest edition~~1997~~ Edition with latest~~2001~~ State of California Amendments ~~and San Francisco Building Code Amendments 2001>> <<International Building Code (IBC) with state amendments.>>~~
~~5.~~2. Factory Mutual Approval Guide (Product listing, only). ~~<<~~ Factory Mutual Approval Guide and FM Pamphlet #20 "Rules for Installing Sprinklers" (Product listing and project review)~~>>~~.

~~6.~~3. Underwriters Laboratories, Inc.
~~7.~~4. Industrial Risk Insurance Underwriters.
~~8.~~5. Owner's insurance agency.

C. Work includes but is not limited to the following:

1. Automatic Wet Type Sprinkler System.
~~2. <<Dry Type Sprinkler System.>>~~
~~3.~~2. <<Computer Room: ~~Single <<~~Double~~>>~~ interlocked pre-action system.~~>>~~
~~4. Standpipes: Dry type <<Wet type>>.~~
~~5. Equipment:~~
~~a. Fire Pump system~~
~~6. Remodeling of existing systems.~~
~~7. All cutting and patching.~~
~~8.~~3. Provide all pipe, fittings, sprinklers, valves, signs, flow switches, tamper switches, protective painting, test connections, drains and tests necessary to make the entire system complete and operative.
~~9.~~4. Coordinate with plumbing contractor for capacity of all sprinkler main, test, and auxiliary drain connections.
~~10.~~5. Valve tags and instruction plates shall be mounted and/or hung per local fire department requirements.
~~11. <<All required fire extinguishers.>>~~
~~12. << All sleeves and inserts.>>~~
~~13. <<All trenching and backfilling, including culverts under rails and guard posts where required.>>~~
~~14. <<3" drain riser shall be provided adjacent to each standpipe riser for testing of fire department pressure reducing valves. >>~~
~~15. <<Provide hose valve with cap downstream of sprinkler system pressure reducing valves for the purpose of testing (per NFPA 13, 1999). Hose valve shall be sized to provide full flow through pressure reducing valve.>>~~

1.4 SUBMITTALS

A. Product Data: Submit six copies of manufacturer's technical data and installation instructions for fire protection materials and products.

1. Thirty days after the awarding of contract, contractor shall submit list of manufacturer's names and model numbers for ~~<<~~review and comment~~>>~~ ~~<<~~approval~~>>~~ to architect. This list shall identify any prior approved substituted items contractor wishes to use. Do not submit technical data until list has been approved. This is mandatory.
2. Prior to construction submit for <<review and comment>> <<approval>> items including but not be limited to the following:
   a. Coordinated layout drawings. Lettering shall be minimum 1/8" high.
   b. Sprinklers and escutcheons - designating area of use.
   c. Valves, valve boxes, flow switches, and tamper switches.
   d. Provide California State Fire Marshal approval numbers for flow switches and tamper switches.
   e. Pipe, fittings, sway bracing, inserts, anchors and hangers.
   f. Inspector's test and drain station.
   g. Fire department connections.
   ~~h. Fire extinguishers.~~
   ~~i. Hose valves, pressure relief valves, and pressure reducing valves.~~
   ~~j. Fire pumps with performance curve.~~
   ~~k. Fire hydrants.~~

B. Working Plans: Prepare scaled working plans for fire protection pipe and fittings including, but not necessarily limited to, pipe and tube sizes, locations, and elevations and slopes of

horizontal runs, wall and floor penetrations, and connections. Indicate interface between and spatial relationship to piping and adjacent equipment. Lettering shall be minimum 1/8" high. <<All design work shall be done under supervision of licensed engineer. >>

1. Spacing of fire sprinklers shall be coordinated with lights, air conditioning outlets, sound speakers, architectural reflected ceiling plan; obstruction from light fixtures and other architectural features; and sprinkler piping shall be coordinated with HVAC ductwork & piping, plumbing, electrical conduit, cable trays and structure prior to the installation. Drawings shall be composite type including mechanical, plumbing and lighting equipment with sprinkler and sprinkler drain piping.

C. Submittal Drawings: Submit shop drawings to Agency having jurisdiction for approval bearing engineer of record stamp <<bearing preparer's NICET stamp>>. Submit six approved copies, bearing stamp and/or signature of authority having jurisdiction to the Engineer for ~~<<~~review, ~~and~~ comment and ~~>> <<~~approval~~>>~~.

1. Contractor shall submit sprinkler head locations to architect for approval.
2. Each calculation shall include legible schematic of system showing all hydraulic reference points.

D. Hydraulic Calculations: Prepare hydraulic calculations of fire protection systems. Submit to authority having jurisdiction for approval. Submit six approved copies, bearing stamp, and/or signature of Agency having jurisdiction to Owner's representative for ~~<<~~review, ~~and~~ comment~~>~~and ~~> <<~~approval~~>>.~~

1. Contractor shall submit published piping friction loss data from manufacturer with hydraulic calculations.

E. Certificate of Installation: Submit certificate upon completion of fire protection piping work, which indicates that work has been tested in accordance with NFPA 13, and also that system is operational, complete, and has no defects.

F. Maintenance Data: Submit maintenance data and parts lists for fire protection materials and products. Include this data, product data, shop drawings, approval drawings, approval calculation, certificate of installation, and record drawings in maintenance manual; in accordance with requirements of the General Conditions and of Division 01.

G. Operating and Maintenance Instructions: Provide the Owner with three sets of operating and maintenance instructions covering completely the operation and maintenance of sprinkler equipment and controls. Manual shall be assembled in a 3-ring binder and arranged in following sections:

1. Site Utilities: Drawings showing location, size, depth of all connections, valve boxes, manholes, etc., as installed.
2. Section No. 1: A chart tabulating all types of pipefittings, valves, and piping specialties installed in each system.
3. Section No. 2: A chart tabulating all pressures, valve settings for fire department and sprinkler pressure reducing valves as required by S.F.F.D. Provide pressure reducing valve flow test documentation.
4. Section No. 3: Manufacturer's brochures of all sprinkler heads.
5. Section No. 4: Manufacturer's brochures of fire pumps, jockey pump and controllers.
6. Section No. 5: Tamper switches and flow switches.
7. Section No. 6: Fire Department connections.
8. Section No. 7: Fire Extinguishers.
9. Section No. 8: Fire Hydrants.
10. Section No. 9: Reproducible copies of approved working drawings prepared to facilitate the actual installation of ductwork and piping. Drawings shall indicate location of all concealed valves, and other apparatus.
11. Section No. 10: 2 copies of NFPA 25 "Standard for Inspection, Testing and Maintenance of Water Based Fire Protection Systems."

12. Section No. 11: Approval Calculations.
13. Section No. 12: Certificate of Installation.
14. Section No. 13: Guarantees.
15. The Contractor is responsible for proper instruction of Owner's personnel for operation and maintenance of all material, equipment and apparatus provided.

1.5 DESIGN DESCRIPTION

A. This section of the specification combined with any of the contract drawings are intended as a guide to establish a basis of design for the systems required.

B. Contractor shall examine <<the existing installation,>> the Architectural, Interior Design, Structural, Mechanical and Electrical drawings, layout and install a completely hydraulically sized sprinkler system for all areas. Space shall be provided for any valving and equipment to be used.

1. System shall start 5'-0" from perimeter wall and extend throughout the building. Fire main beyond 5'-0" perimeter is provided under Division 02 work. << System shall start at connection to City main and extend throughout the building.>>
2. Contractor shall contact Owner's insurance agency to incorporate insurer's design requirements in this layout document. <<Factory Mutual shall review layout drawings and calculations. Incorporate all of their design criteria into documents.>>

C. Office Areas: The main building shall be served with a wet type sprinkler system. A main riser shall be located in the ~~<<Mechanical Room>> <<vestibule>> <<stair>> community room~~ janitor's closet with sprinkler zone valves on each floor.

D. ~~<<Base~~ Building construction shall include upright heads with tees with 1" outlets for future drop in areas with no ceiling. Areas with ceilings, including finished core areas, lobbies, corridors or as noted herein shall have concealed and~~<<~~recessed pendent~~>>~~ heads installed as part of the base building construction. Unfinished areas shall be provided with upright type heads. ~~Heads will be relocated to the finished ceiling tile under the tenant improvement contract. >>~~

~~E.~~ All areas shall be sprinklered as the construction progresses, including accessible pipe chases, ~~elevator pits,~~ etc. ~~<<Provide shutoff valve with tamper switch for elevator pit.>>Provide shutoff valve with tamper switch for elevator machine room.~~

~~F. Install <<air operated>> <<dry type>> <<wet type>> standpipe risers in each of the stairwells with fire department valves on each floor level. <<Provide 500 GPM at 100 PSI <<65 PSI>> at most remote fire department valves.>> Fire department valves not in stairwell shall be housed in cabinets. Provide roof manifold at top of each standpipe.~~

~~G. Install <<air operated>>dry type standpipe risers in garage parking as indicated on drawings.~~

~~H.~~E. Design, provide and install a ~~single <<~~double~~>>~~ interlocked Pre-Action sprinkler system for the computer room. System shall utilize an electric controlled deluge valve by the fire protection contractor controlled by detection and alarm system by the fire alarm design/build contractors. Piping to be pneumatically pressurized for supervisory purposes only. Upon loss of pressure, an alarm will sound and a signal sent to the fire alarm panel. Coordinate with Division 26 work. System will be from one manufacturer.

~~I. <<The garage parking levels and loading docks exposed to freezing temperatures shall be protected by a dry type sprinkler system. >>~~

~~J. Two (2) fire pumps shall be installed to maintain minimum pressures as required by the local authority having jurisdiction and NFPA Pamphlets 13 and 14. Fire pumps shall be furnished and installed in accordance with NFPA Pamphlet No. 20.~~

~~K. A fire tank shall be installed to provide a secondary water supply. Tank shall be furnished and installed in accordance with NFPA Pamphlet No. 22. <<Tank is provided with structure. This Contractor to outfit per NFPA Pamphlet No. 22.>>~~

~~L.~~F. Pressure restricting devices shall be installed on any branch outlet exceeding 100 PSI.

~~M.~~G. All electrical devices used for this system shall be compatible with the fire alarm system, refer to Division 26.

~~N.~~H. ~~<<~~Seismic Requirement: All automatic sprinkler systems to be seismically braced (for CA). ~~>><<~~Seismic Requirement: All automatic sprinkler and standpipe system to be seismically braced and anchored for IBC Seismic Zone D, ~~<<~~FM~~>>~~ and NFPA 13. Submit shop drawings on methods and materials.

1. Do not use NFPA Earthquake Zone Chart.

1.6 HYDRAULIC DESIGN

A. System shall be a straight line or gridded system per NFPA No. 13 with the following exceptions:

1. For all systems the design area shall be the hydraulically most demanding rectangular area.
~~2. <<Velocity in fire pump suction piping shall not exceed 15 feet per second.>>~~
~~3.~~2. Minimum pressure for any sprinkler head shall not be less than 7 psi.

~~B. Fire Standpipes: Pipe schedule per UBC, <<IBC>> Chapter 9 or hydraulically calculated at 500 GPM for first standpipe and 250 GPM for each additional standpipe. Wet standpipes shall maintain 100 <<65>> Psi at top of each riser.~~

~~C.~~B. Total Combined Inside & Outside Hose Allowances: Hydraulic calculations shall include an allowance for hose streams, added at the point of connection to the water supply.

~~D.~~C. Safety Factor: 10 Psi, or 10 percent of static and residual pressure, whichever is greater.

~~E.~~D. Light Hazard Areas: Water density of 0.10 GPM per square foot calculated for an area of 1500 square feet in the most remote location.

~~F.~~E. Ordinary Group I Hazard Areas: Water density of 0.15 GPM per square foot calculated for an area of 1500 square feet in the most remote locations.

~~G.~~F. Ordinary Group II Hazard Areas: Water density of 0.20 GPM per square foot calculated for an area of 1500 square feet in the most remote locations.

~~H.~~G. Extra Group I Hazard Areas: Water density of 0.30 GPM per square foot calculated for an area of 2500 square feet in the most remote locations.

~~I.~~H. Head spacing shall not exceed the limits described in NFPA Pamphlet No. 13.

1. Light Hazard: 225 sq.ft. (for smooth ceiling).
2. Ordinary Hazard: 130 sq. ft.
3. Extra Hazard: 100 sq. ft.

~~J.~~I. Maximum floor areas protected by any one sprinkler system riser:

1. Light Hazard: 52,000 sq.ft.
2. Ordinary Hazard: 52,000 sq.ft.
3. Extra Hazard: 40,000 sq. ft.

~~K.~~J. Flow Data: Contractor is to verify flow data (static pressure, residual pressure and GPM flowing) available at site and provide design for available pressure and flow.

1.7 RELATED WORK SPECIFIED ELSEWHERE

A. Section 210500: Basic Materials and Methods

B. Division 26: Electrical. Coordinate for electrical wiring of detectors, flow alarm switches, tamper switches, fire alarm bell, for electrical wiring of fuel oil and water tank level alarms, connection by life safety section for remote monitoring <<and starting>> of fire pump, and power to fire pumps. All electrical devices used for this system shall be compatible with the fire alarm system. Coordinate with electrical for electric fire pump motor size and emergency generator sizing.

C. Division 09: Finishes.

D. Division 02: Existing Conditions. Coordinate with General Contractor for excavation for the underground water supply system.

~~E. Coordination with Architectural for fire protection water supply tank.~~

~~F. Coordination with Mechanical for diesel exhaust.~~

~~G. Coordination with Mechanical for fuel oil day tank piping.~~

~~H.~~E. Coordination with Plumbing for drain.

1.8 QUALITY ASSURANCE

A. The Contractor for the fire protection installation shall be duly qualified Fire Protection Contractor, experienced and regularly engaged in the installation of fire protection systems with a license classification of C-16. Where local authorities require additional licensing of the Fire Protection Contractor, and/or workmen, such a license shall be mandatory for a prospective Contractor.

1. Contractor is to verify flow data (static pressure, residual pressure and GPM flowing) available at site and provide design for available pressure and flow.
2. <<The Fire Protection contractor shall be the Engineer of Record for the automatic sprinkler and standpipe system.>>
3. Permits - The Fire Protection Contractor shall obtain permits for the installation or construction as required for approval and installation of the fire protection system. The Fire Protection Contractor shall submit working plans to the authorities having jurisdiction to obtain approval.

1.9 DELIVERY, STORAGE, AND HANDLING

A. Deliver products to site under provisions of Division 01. Handle components carefully to prevent damage, denting, and scoring. Do not install damaged components. Damaged components shall be replaced with new components.

B. Store/protect products under provisions of Division 01. Store components in clean, dry place. Protect from weather, dirt, water, construction debris, and physical damage.

1.10 GUARANTEE

A. Provide a one-year (12 months) guarantee under provisions of Division 01. The guarantee shall include parts, shipping, labor, travel costs, living expenses, required fees, and any other associated cost or expense to repair or replace products or systems. The guarantee period is to begin on the date of acceptance of the fire protection installation by the Owner.

PART 2 - PRODUCTS

2.1 GENERAL

A. All products to be commercial grade, new and of the manufacturer's latest design model. Products manufacturers outside of North America will not be accepted without written approval from engineer prior to submission of bid.

B. All products to be UL listed and/or FM approved, except for items, which are not required to be listed by code.

C. All products shall be delivered and stored in original containers. Containers shall be clearly marked or stamped with manufacturer's name and rating.

D. The following items to be included but specified under Section 210500: Basic Materials and Methods.

1. Hangers and supports.
2. Escutcheons plates, flashings and sleeves.
3. Access panel and doors.
4. Identification markers and signs.
5. Expansion compensators and flexible connectors.
6. Anchors, and seismic restraints.
7. Excavation and backfill.

2.2 PIPE AND FITTINGS - ABOVE GROUND

A. General: The piping products listed below by manufacturer's name and model numbers are the only acceptable materials listed for this project. Substitutions of pipe must be submitted and approved in writing by the architect prior to bid. No copper pipe shall be allowed in the wet fire sprinkler system.

B. Piping or fittings that show substantial rust or breaks in coating will be removed and replaced.

C. Allied Tube & Conduit: Schedule 40 black steel, ASTM A-135 stamped on pipe, UV cured acrylic finish; Stockham, Grinnell or Warwick Class 150 threaded malleable, ASTM A197, ASTM A126, or Victaulic roll-grooved fittings and couplings, only.

D. <<Allied Tube: Scheduled 10 black steel pipe, ASTM A-135 stamped on pipe, UV cured acrylic finish; Victaulic roll-grooved fittings and couplings.>>

E. <<Plenum Rated CPVC pipe listed for fire protection use. Blazemaster.>>

F. ~~Dry standpipe, dry sprinkler and p~~Pre-action sprinkler piping and fittings shall be Schedule 40 galvanized steel, ASTM A-123.

G. Shop-weld thread-o-lets may be used in lieu of tee fittings, but field (site) welding will not be permitted.

H. Mechanical Couplings: Victaulic grooved couplings style 07, 75 or 77, or equal by Gruvlok.

I. Mechanical Tees: Victaulic style 920, Gruvlok. U-bolt mechanical tees are not acceptable.

J. Flexible sprinkler connector for ductwork sprinkler application: Flexhead or equal Factory Mutual approved system.

K. Use rigid couplings where flexibility is not required or provide necessary sway bracing.

L. Prohibited Piping and Fittings: Copper pipe, <<CPVC pipe>>, pipe less than schedule 40 for threaded or less than schedule 10 for roll grooving; Super 40 “Dyna-Flow”, “Dyna-Thread”, “Fireflow”, XL, Thinwall, “Eddylite” by Bullmoose and Threadable Lightwall pipe are not allowed. POZ-LOK, U-bolt Victaulic style 921 mechanical tees, Victaulic style 99 Roust-A-Bout, Victaulic style 90 Plainlock, Hooker style fitting, quick disconnect, boltless, snap-joint, field drilling or welding of any main or branch lines, and any device specifically prohibited by the local authority having jurisdiction is not allowed. No unions shall be permitted for any size pipe. Plain end fittings are not allowed.

2.3 PIPE AND FITTINGS - UNDERGROUND

A. Class 52 ductile iron pipe and fittings, white, cement lined, mechanical or Tyton joint fittings. Piping to be factory encased with 8 mil polyethylene tube or sheet. Fittings to be double field wrapped with 2" wide, 20 mil vinyl tape, 50% overlap.

B. Manufacturer: United States Pipe and Foundry, Griffin or Pacific States, only.

C. Polyvinyl Chloride (PVC) Plastic Pipe:

1. Pipe and fittings: Pipe shall conform to AWWA C900 and shall be plain end or gasket bell-end, pressure Class 150 with cast-iron-pipe-equivalent OD. Fittings shall be gray-iron or ductile-iron conforming to AWWA C110, and shall have cement lining conforming to AWWA C104, standard thickness.
2. Joints and Jointing Material: Joints for pipe shall be push on joints as specified in ASTM D3139. Joints between pipe and metal fittings, valves, and other accessories shall be push on joints as specified in ASTM D3139 or shall be compression type joints / mechanical joints as respectively specified in ASTM D3139 and AWWA C111. Provide each joint connection with an elastomeric gasket suitable for bell or coupling or push-on joints with which it is to be used.
3. Transition from PVC to ductile iron pipe shall occur a minimum of 5 feet from building.

D. All underground piping for fire mains shall be installed, clamped, anchored, flushed and hydrostatically pressure tested according to the requirements of the authorities and/or agencies having jurisdiction, and NFPA Pamphlets Nos. 13 and 24 and F. M. Handbook of Industrial Loss Prevention.

E. Anchor underground riser stub to nearest underground connection by means of rodding. Retaining glands with setscrews above grade are not allowed.

2.4 UNDERGROUND PIPE COATING:

A. All underground ferrous piping shall be covered with:

1. Either two coats of 10 Mill Scotch Wrap No. 51, or with;

2. "XTRU-COAT" prefabricated extruded cover with joints sealed with two coats of 10 Mill Scotch Wrap #51.
3. Or approved equal

2.5 THRUST BLOCKS

A. Provide thrust blocks at changes in pipe direction, changes in pipe sizes, dead-end stops and at valves.

B. Calculate area of undisturbed earth of thrust block based on actual soil conditions and water test pressure of 200 Psi.

C. Concrete and reinforcing steel shall be as specified in Division 03 and 05. All concrete shall be Class A, unless specified otherwise.

D. Miscellaneous nuts and bolts shall be stainless steel.

2.6 RODS AND CLAMPS

A. Socket clamps shall be stainless steel; four bolt type, equipped with stainless steel socket clamp washers and nuts Grinnell Fig. 595 and 594, Elcen Fig. 37 and 37X, or equal.

B. Rods shall be stainless steel, 3/4" diameter.

2.7 SPRINKLER HEADS - GENERAL

A. Sprinkler heads shall be regular automatic concealed recessed closed-type heads of ordinary degree temperature rating except that sprinkler heads installed in the vicinity of heating equipment or in special occupancy areas shall be of the temperature rating as described in NFPA No. 13.

B. Provide quick response heads in all new light hazard occupancies. <<For existing sprinkler systems, response type to match existing type unless otherwise noted.>>

C. Provide corrosion-resistant sprinkler heads where they are exposed to weather, moisture or corrosive vapors.

D. The Contractor shall furnish spare heads. The heads shall be packed in a suitable container and shall be representative of, and in proportion to, the number of each type and temperature rating head installed. In addition to the spare heads, the contractor shall furnish not less than two special sprinkler head wrenches. Refer to NFPA 13 section; "Stock of Spare Heads".

E. <<Provide 1” clearance with escutcheon around penetrations through suspended ceilings per ASCE requirements. >>

2.8 SPRINKLER HEADS AND ESCUTCHEONS

A. Sprinkler heads installed shall be upright ~~or~~, pendent or concealed recessed, as conditions require, and shall be of the following type and finish for the areas designated. Unless otherwise specified, sprinklers shall be small frame type, center bulb capsule for finished areas, fusible link for unfinished areas, and ½" orifice. <<Extended coverage heads not allowed in unfinished areas except garages.>> <<Extended coverage sprinkler heads are not allowed.>>

Building Area	Sprinkler Head	Sprinkler Finish	Escutcheon Finish	Temp. Deg.
Unfinished Retail, & Office, Garage & Mechanical Rooms	Upright/Pendant	Brass	None	165°F
Electrical, Telephone & Switchgear Rooms	Upright	Brass	None	286° F
Finished Ceilings	Semi-recessed Pendant	White	White	165° F
	<<Concealed Pendant	Brass	White Coverplate	165° F>>
Soffit	Flush Sidewall	White	White	165°F
Sidewall	Horizontal Sidewall	Brass	None	165°F
~~Balconies~~	~~Dry Sidewall~~	~~Brass~~	~~Chrome~~	~~155°F~~

B. Manufacturer: Reliable, Star or Viking.

2.9 VALVING

A. 2" or Smaller:

1. Control Valve: OS&Y rising stem type gate valve bronze body, bonnet and disc, copper alloy stem, threaded ends, 175 PSI WOG min. Provide with tamper switch.
2. Check Valve: Swing check type with bronze body, cap and disc, threaded ends, 175 PSI WOG min.
3. Drip Valve: 3/4", cast brass automatic ball drip type, threaded ends, 175 PSI WOG min.
4. Testing Valve: 1-1/4", test and drain, sight glass, ½" test orifice, lever operated, 300 psi WOG. Drain to mop sink or drain riser.
5. Main Drain Valve: 2", angle gate valve, bronze body, copper alloy stem, threaded ends, 175 psi WOG. Drain to mop sink or drain riser.

B. 2-1/2" or Larger:

1. Control Valve: Lug type wafer valve with tamper switch, ductile iron body, nickel plated ductile iron disc, stainless steel stem and Buna-N seat, 175 PSI WOG min.
2. Control Valve: OS&Y rising stem type gate valve, cast iron body and bonnet, bronze stem, seat and disc, flanged ends, 175 PSI WOG min. Provide with tamper switch.
3. Check Valve: Swing check type with cast iron body, bolted cap and disc, flanged ends, 175 PSI WOG min.
4. Manufacturer: Grinnell, Stockham, Milwaukee, Mueller, Kennedy, Elkart or AGF.

2.10 WET SPRINKLER ALARM CHECK VALVE

A. Contractor shall provide, where required, a completely engineered horizontal wet alarm check valve, retarding chamber, and trim assembly. Viking #H-2, Star or Reliable.

2.11 UNDERGROUND WATER VALVE

A. Resilient seated gate, valve, non-rising stem, 2" square valve nut, ductile iron construction with epoxy coated surfaces, both interior and exterior, 250 PSI, mechanical joint ends. Provide yard box and cover.

B. Manufacture: American Darling, Clow, Dresser, or U.S. Pipe.

2.12 VALVE BOXES

A. Cast iron valve boxes for shutoff valves buried in ground shall be complete with bellbottoms, extension piece, top and cover. Boxes shall be suitable for the types of valves with which they are used. All valve boxes shall have a concrete collar flush with grade.

B. Lids shall have the applicable letters embossed upon the top surface. Tagging shall match existing lids.

C. Manufacturer: Tyler, ITT Grinnell, or equal.

2.13 PRESSURE REDUCING VALVES

A. Sprinkler System: Rough bronze body with red enameled hand wheel with integral check valve of the pressure reducing type. Outlet pressure shall not exceed 165 PSI at maximum system pressures. Pressure settings to be field adjustable.

1. Manufacturer: Zurn #Z-3004

B. Fire Service: 150 class pressure rating, cast iron body with brass main valve trim, control system cast bronze with stainless steel trim

1. Manufacturer: Cla-Val #90-21UL.

2.14 PRESSURE RELIEF VALVE

A. Provide 3/4" pressure relief valve on discharge side of Sprinkler system pressure reducing valve. Set to a maximum of 175 PSI.

1. Manufacturer: Zurn #P1000A.

2.15 BACKFLOW PREVENTER

A. Provide listed backflow prevention device as required by local codes and ordinances. Backflow prevention devices installed in the vertical position shall be approved for that orientation.

B. Double check detector check valve assembly: Epoxy coated, ductile iron construction, 175 Psig working pressure, complete with two spring loaded "Y" type check valves, "Y" strainer with hose bibb on suction side of assembly, two OS&Y gate valves, test cocks, bypass water meter and bypass doublecheck. Ames Model 3001SS, Febco #856-DCDA, Watts #709-DCDA-OSY, Wilkins #950DA or approved equal

C. Reduced pressure backflow preventor: Ductile iron construction, 150 Psig working pressure, complete with two spring loaded "Y" type check valves, "Y" strainer with hose bibb on suction side of assembly, one differential relief valve, two OS&Y gate valves and test cocks. Unit shall be tapped on both sides to accommodate installation of test cocks. Febco #860 RPA, Wilkins #975DA, Watts #909-RPDA or approved equal.

D. Detector check valve assemblies: Ductile iron construction, 150 psig working pressure, complete with spring loaded check valve, two OS&Y gate valves and four test cocks. Febco #800 or approved equal.

2.16 INTEGRAL INSPECTORS ALARM TEST AND SYSTEM DRAIN

A. Combination system drain and visible orifice insert/sight glass for testing system alarm; with screwed or grooved inlet and outlet connections, Malleable iron hand wheel, EPDM valve seats, maximum working pressure 300 Psi, 1/2" orifice insert, Bronze housing <<with 1/2" pressure relief valve, Watts Regulator Model FP 53L, 175PSI>>, UL listed and FM Approved. Victaulic TestMaster II style 720, or approved equal.

B. Water pressure gauge, range 0-300 Psi, in 5 Psi increments, brass case - 3-1/2" diameter, 1/4" NPT male pipe connection, UL listed. Locate pressure gage on riser per code. Star Sprinkler, Ashcroft or approved equal.

C. Pressure gauge test valve, brass 1/4" screwed ends, 300 Psi WOG. United or approved equal.

D. All relief, main, auxiliary and equipment drains shall be routed separately to floor drain or air gap fitting (by plumbing).

2.17 TAMPER SWITCHES

A. Switch shall be mounted so as not to interfere with normal operation of the valve and be adjusted to operate when handle of valve has traveled more than one-fifth the distance of its normal operating position. Electrical Contractor shall provide conduit from switch to fire alarm panel.

B. Housing shall be of aluminum, acid-treated, primed and finished in baked red enamel. Removal of housing shall cause switch to operate. Inside shall be single pole, double throw micro switch with connection for electrical conduit.

C. Install on all control valves.

D. Manufacturer: Potter-Electric, Notifier, Ellenco, or Simplex.

2.18 WATER FLOW ALARM - VANE TYPE

A. Indicator shall be for either vertical or horizontal installation. Indicator shall not be installed in a fitting that changes direction of water flow and shall have a sensitivity setting to signal any flow of water that equals or exceeds the discharge from one sprinkler head. Provide retarding device to prevent false alarms from line surges.

B. Whenever a water flow alarm is installed in the piping system, an approved floor control valve shall be provided upstream of the alarm indicator. In addition, a drain is required downstream of the alarm indicator.

C. Each water flow alarm shall be wired to a Fire System. All wiring and conduits as required will be provided under Division 26. An alarm will automatically activate the local fire alarm system.

D. Manufacturer: Potter-Electric, Ellenco, Notifier, or Simplex.

2.19 EXTERIOR ALARM

A. Electric bell, 10" diameter, U.L. listed, weather-proof back box housing, 120 VAC, 99 dB at 10 FT; Potter model PBA12010 or equal.

B. Electric Horn: Potter-Electric, Ellenco, Notifier, or Simplex weatherproof, 120 VAC.

~~2.20 <<EXTINGUISHERS>>~~

~~A. <<Fire extinguishers shall be U.L. listed, type 2A10B:C. Cabinet door and frame shall be steel, recessed with gray enamel prime coat. Refer to Architectural drawings for exact location and elevation of each cabinet.>>~~

~~2.21 DRY-PIPE VALVE SYSTEM~~

~~A. Contractor shall provide where indicated on drawings a completely engineered dry-pipe valve assembly in accordance with NFPA Pamphlet No. 13.~~

~~B. Space shall be provided for all valving required. Dry-pipe alarm valve(s) shall be of the differential type with all accessories including, but not limited to, the following:~~

~~1. Alarm Valve, Trim, Pressure Switch with auxiliary contacts for fire alarm connection, Water gong, Air maintenance device, listed air compressor unit designed to fill system in a minimum of thirty minutes, Dry type valves supplying more than 300 sprinkler heads shall be provided with quick opening device (accelerator).~~

~~C. Manufacturer: Viking #E, Star or Reliable.~~

~~2.22~~2.20 PRE-ACTION SYSTEM

A. System Components

1. Deluge Valve
2. Deluge Valve Trim Including:
   a. Test Drain Valve
   b. Auxiliary Drain Valve
   c. Drain Cup
   d. Drip Check
   e. Alarm Test Shut off Valve
   f. Strainer Orifice Check Valve
   g. Pressure Operated Relief Valve
   h. Priming Valve
   i. Emergency Release
   j. Priming Pressure Gauge and Valve
   k. Water Supply Pressure Gauge and Valve
3. Water Flow Alarm Trim:
   a. Alarm Pressure Switch
4. Riser Valves:
   a. Water Supply Control Valve
   b. Rubber Seat Check Valve
   c. System Main Drain Valve
5. System air supply trim:
   a. System Pressure Gauge and Valve
   b. Soft Seat Check Valve
   c. Air Supervisory Pressure Switch
   d. Air Supply Control Valve

e. Dry System Air Supply

6. Release Trim
   a. Strainer
   b. Solenoid Valve

~~2.23 FIRE HOSE CABINETS`~~

~~A. Refer to Architectural and Mechanical Drawings for exact location and elevations.~~

~~B. Cabinets shall be recessed <<semi-recessed, surface mounted>>, 20 gauge steel construction, 28" wide by 39" high by 8" deep overall dimensions with full glass door panel, identifying decal, and gray enamel factory prime finish. All components shall have a rough chrome finish. Provide with the following:~~

~~1. 1-1/2" stamped valve escutcheon.~~
~~2. 2-1/2" angle valve.~~
~~3. Baked enamel steel hose rack.~~
~~4. 1-1/2" brass rack nipple.~~
~~5. 1-1/2" x 100'-0" of single jacket polyethylene lined hose.~~
~~6. Cast brass couplings.~~
~~7. Fog nozzle.~~

~~C. Manufacturer: Croker, Larsen's J & L or Potter-Roemer.~~

~~2.24 FIRE DEPARTMENT VALVE CABINETS~~

~~A. Refer to Architectural and Mechanical drawings for exact location and elevation of each cabinet.~~

~~B. Cabinets shall be 18" x 18" inside box dimensions, recessed, 20-gauge steel with full glass door and 2-1/2" fire department valve with rough chrome finish. Cabinets shall have a factory prime finish.~~

~~C. Manufacturer: Crocker, Larsen's J & L or Potter-Roemer.~~

~~2.25~~2.21 FIRE DEPARTMENT CONNECTIONS

A. Flush wall ~~mounted unit or~~ freestanding unit with individual clapper valves, plugs and chains, locations as indicated on drawings. Escutcheon plate to be lettered as follows; "AUTO SPRINKLER", "DRY STANDPIPE" or "AUTO SPRINKLER AND STANDPIPE". Unit shall be polished chrome ~~or brass finish~~, mounted 36" above finished grade. Number of inlets required shall be in accordance with regulations of the Fire Marshal or local fire department.

~~2.26 FIRE DEPARTMENT HOSE VALVES~~

~~A. Fire Department Valves: 2-1/2" <<with 3" outlets>> brass construction female to male angle valve with cap and chain, rough chrome finish and mounted 48" above finished floor.~~

~~B. Pressure Reducing Fire Department Valves: 2-1/2" <<with 3" outlets>> tamper proof, automatic pressure reducing, all brass male to female angle, rated at 400 PSI rough brass finish, mounted 48" above finished floor.~~

~~C. Manufacturer: Croker, Elkhart, Powhattan Brass, Potter-Roemer or Zurn.~~

~~2.27 ROOF MANIFOLD~~

~~A. 6" x 2-1/2" x 2-1/2" <<3" x 3">> straight pattern cast brass roof manifold, Croker Model No. 294 or approved equal. <<6" x 2-1/2" x 2-1/2" <<3" x 3">> 90 degree pattern cast brass roof manifold, Croker Model No. 296 or approved equal (DSP only)>>.~~

~~2.28~~2.22 POST INDICATOR VALVE

A. Indicator post valve and indicator post. Clow # 2925 or approved equal.

~~2.29 FIRE HYDRANT~~

~~A. Approved type fire hydrant shall be furnished and installed as shown on drawings. Fire hydrants shall have two hose nozzles with independent hose gate valves. Clow or approved equal.~~

~~2.30 FIRE PUMP SYSTEM~~

~~A. Furnish and install two (2) fire pumps, diesel fuel tank, controllers, transfer switches and all fittings, accessories, seismic anchors, and devices as required by NFPA Pamphlet No. 20 and as detailed on the drawings.~~

~~B. Each fire pump unit shall be <<vertical shaft inline type>> <<horizontal, split case,>> bronze fitting, mounted, centrifugal fire pump.~~

~~1. Mounting feet of <<horizontal, split case>> <<vertical shaft inline type>> pump shall be machined <<perpendicular> <<parallel>> to the shaft. Pump shall be bolted to extra heavy cast iron drip rim base. Top of pump shall be machined to receive motor mounting bracket. Mounting bracket furnished with machined registered fits to align pump and motor. Pump base shall be mounted on a 6" high concrete pad provided by General Contractor. Pump and driver shall be mounted on a common baseplate with direct connection through a flexible coupling. Unit shall include a coupling guard. Grout pump base to housekeeping pad.~~

~~C. Fire pump, fittings and system accessories shall be rated for 50 PSI or greater than the working pressure for system pressures that are above 175 PSI as shown on fire protection riser diagram.~~

~~D. Automatic Transfer Switch: Provide an automatic transfer switch in accordance with Division 26 and NFPA 20, 7 - 8 "Power Transfer for Alternate Power Supply". This contractor shall be responsible for installation of all wiring between transfer switch and control panel and fire pump. The controller and the transfer switch shall be furnished as a single package.~~

~~E. Remote Alarm: This unit shall be located in the building engineer's office. Unit shall be used to monitor the operation of the fire pump controller. There shall be automatic audible alarm where there is a power loss, transformer failure or power loss to alarm panel. The unit shall also include indicator lights to indicate pump on and pump failure conditions listed above. Refer to NFPA 20, 7 - 4.7 "Alarm and Signal Devices Remote From Controller".~~

~~F. Manufacturer: Patterson, Fairbanks-Morse or Peerless.~~

~~2.31 FIRE PUMPS~~

~~A. Electric Fire Pump FP-1:~~

1. ~~The fire pump shall be designed for the capacity scheduled on the drawings. The pump shall be horizontal split case, double suction impeller type. Peerless or approved equal.~~
2. ~~The pump unit shall meet all requirements of the National Fire Protection Association Pamphlet #20, and shall be U.L. listed. The following accessories shall be included with the pump unit:~~
   a. ~~<<5" x 6">> Discharge Increaser.~~
   b. ~~Liquid filled compound pressure and vacuum gauge for suction and liquid filled pressure gauge for discharge both with gauge valves.~~
   c. ~~Automatic Air Release Valve.~~
   d. ~~3/4" Casing Relief Valve.~~
   e. ~~<<6" x 5">> Eccentric Suction Reducer.~~
3. ~~Driver shall be an electric motor of the ODP type, wound for 480 volts, 3 phase, 60 cycle current. Locked rotor current shall not exceed the values specified in NFPA Pamphlet #20. Bearing shall be anti-friction ball or roller type. The drive shall be vertical open drip proof, ball bearing type, AC, induction, squirrel cage "P" face motor.~~
4. ~~Fire Pump Controller: The motor control equipment shall be completely assembled, wired and tested at the factory and the assembly shall be specifically U.L. approved for fire pump purposes. The controller shall be marked "Electric Fire Pump Controller". All equipment shall be enclosed in one or more approved drip-tight enclosures. The controller shall be a Hubble Industrial Controls Co. combined manual and automatic primary resistor <<across-the-line>> <<reduced voltage>> <<solid state>> <auto transformer>> <<Wye-Delta closed transition>> <<soft start>> type incorporating the following:~~
   a. ~~Disconnect switch, externally operable, quick-break type.~~
   b. ~~Circuit breaker, time delay type with trips in all phases, shall be set for 300% of motor full load current. <<Interrupting capacity of circuit breaker shall be 100,000 amperes (RMS).>>~~
   c. ~~Motor starter: Reduced voltage <<across-the-line>> <<solid state>> <<auto transformer>> <<soft start>> <<Wye-Delta closed transition>> type capable of being energized automatically through the pressure switch or manually by means of an externally operable handle.~~
   d. ~~Running period timer: Set to keep motor in operation, when started automatically, for a minimum period of one minute for each 10 HP motor rating, but not to exceed 7 minutes.~~
   e. ~~Pilot Lamp: To indicate circuit breaker closed and power available.~~
   f. ~~Alarm Relay: To energize an audible or visible alarm through an independent source to indicate circuit breaker open or power failure.~~
   g. ~~Ammeter test link and voltmeter test studs.~~
   h. ~~Manual Selection Station: A two-position station shall be provided on the enclosure marked "Automatic" and "Non-Automatic".~~
   i. ~~Means shall be provided on the controller to operate an alarm signal continuously while the pump is running.~~
   j. ~~Provide relays and contacts for connection by life safety section for remote monitoring <<and remote starting,>> as shown on electrical drawings. <<Provide additional set of contacts for building energy management system.>>~~
   k. ~~Mercoid pressure switch.~~
   l. ~~Voltage surge arrestor.~~
   m. ~~Pressure switch piping and fittings shall be brass. Provide dielectric isolation between brass piping and steel hanger rings.~~
5. ~~Tests: The pump shall be hydrostatically tested to twice the working pressure. The pump unit shall be given a complete performance test and characteristic curves prepared from the test results shall be furnished. All field tests shall be arranged with and witnessed by the Owner's Representatives, Architect, Local Fire Department, and the Manufacturer.~~

~~B. Diesel Fire Pump FP-2:~~

~~1. Fire pump shall be designed for the capacity scheduled on the drawings. The fire pump shall be double-suction horizontal split case centrifugal pump, Peerless or approved equal.~~

~~2. The pump unit shall meet all requirements of National Fire Protection Association Pamphlet #20 and shall be Underwriters' Laboratory listed. The following shall be included with the pump unit.~~

~~a. <<5" x 6">>Concentric discharge increaser~~

~~b. 6" x 4" x 6" relief valve tee.~~

~~c. 4" x 90 elbow.~~

~~d. 4" Relief valve.~~

~~e. 4" x 8" enclosed cone.~~

~~f. Liquid filled compound pressure and vacuum gauge for suction and liquid filled pressure gauge for discharge both with gauge valves.~~

~~g. Automatic air release valve.~~

~~h. <<6" x 5">> Eccentric suction reducer~~

~~3. The diesel engine for driving the fire pump shall conform to the requirements of the National Fire Protection Association Pamphlet #20 and shall be specifically approved for fire pumps service. It shall develop sufficient horsepower to drive the pump as required by NFPA Pamphlet #20. The engine shall be an open type, self-contained power unit mounted with the pump on a fabricated steel base and including the following accessories:~~

~~a. Stub shaft.~~

~~b. Fuel pump.~~

~~c. Air cleaner.~~

~~d. Governor.~~

~~e. Lube oil pump.~~

~~f. Lube oil filter.~~

~~g. Electric starter, generator or alternator and voltage regulator.~~

~~h. Dual batteries conforming to NFPA Standards, batteries secured to frame and frame to floor.~~

~~i. Dual battery charger conforming to NFPA Standards.~~

~~j. Heat exchanger cooling system.~~

~~k. Engine jacket water pump.~~

~~l. Water cooled exhaust manifold.~~

~~m. Instrument panel with water temperature gauge, oil pressure gauge, ammeter, tachometer of the totalizing type or an hour meter.~~

~~n. Engine pre-heater.~~

~~o. Exhaust muffler.~~

~~p. Flexible exhaust connector.~~

~~q. Diesel engine exhaust flue to be schedule 40 black iron welded pipe.~~

~~4. Fire Pump Controller: The engine shall be arranged for automatic operation with all wiring terminating in a junction box suitable for field hook-up to the automatic engine control panel specified below:~~

~~a. The controller shall be a Hubble Industrial Controls Co. automatic engine control panel and shall conform to the requirements of NFPA Pamphlet #20 and shall be enclosed in a dust and moisture resistant housing. The controller shall be marked "Diesel Fire Pump Controller".~~

~~b. The controller shall be the combined manual and automatic type including a "manual-off-automatic" selector switch, a pressure recorder, automatic weekly test, and sequential starting.~~

~~c. A Mercoid pressure switch will, upon drop in system pressure, cause the controller to open or close all circuits necessary to automatically start the engine by performing the following functions:~~

~~1) Turn on fuel supply.~~

~~2) Open the cooling water solenoid valve.~~

~~3) Crank the engine in a series of crank-rest cycles, automatically alternating the dual batteries on each cycle.~~

~~4) Disconnect cranking motor upon engine start.~~

~~d. Minimum period timer.~~

~~e. Upon rise in system pressure, all circuits shall be disconnected automatically stopping the engine.~~

~~f. If the engine should fail to start after several cranking attempts, the controller shall disconnect all starting circuits and energize an audible and visual alarm to indicate, "overcrank". In addition, there shall be provided audible and visual alarm to indicate, "high jacket water temperature" and "low lube oil pressure". The engine shall not shut down for either of these faults.~~

~~g. Provide relays and contacts for connection by life safety section for remote monitoring <<and remote starting,>> as shown on electrical drawing. <<Provide additional set of contacts for building energy management system.>>~~

~~h. Pressure switch piping and fittings shall be brass. Provide dielectric isolation between brass piping and steel hanger rings.~~

~~5. Tests: Prior to shipment, the pump and engine shall be thoroughly shop tested by the pump manufacturer. A characteristic curve showing the pump performance based upon the results of the shop test shall be furnished to the purchaser. The fire pump controller shall be fully assembled and factory tested by the control manufacturer prior to shipment.~~

~~C. Diesel Fuel System~~

~~1. Diesel fuel oil day tank and accessories shall include the following:~~

~~a. Tank: Furnish diesel fuel oil day tank, for the diesel fire pump, <<60 gallon capacity>>, UL listed and labeled, material conforming in all respects to NFPA Pamphlet #20 <<and California UBC>>. Tank shall be fabricated using not lighter than 12 gauge steel, all joints welded.~~

~~b. Tank fittings shall include the following:~~

~~1) Automatic duplex pumps shall draw fuel from main storage tank.~~

~~2) Automatic return pump with overflow float and control system to return fuel in excess of 95 per cent volume of day tank back to main tank.~~

~~3) Provide enclosed rupture basin sized for 150 per cent of tank capacity or double walled tank. Provide alarm sensor with automatic alarm to detect leaks in rupture basin.~~

~~4) Primary and emergency vents to 12 ft above grade, 5 ft from building opening and 10 ft from any source of combustion.~~

~~5) Overfill prevention.~~

~~6) Manual gauge~~

~~7) Inlets and outlets to main storage tank.~~

~~8) Drain.~~

~~9) Manual fill.~~

~~10) Coordinate with plumbing for connection to main fuel storage system.~~

~~c. <<Provide fuel resistant epoxy coating on sides and bottom of day tank containment dike.>>~~

~~d. Tank Level Indicating System:~~

~~1) Adjustable tank level indicating system with remote indication, electrical to make connection. Delaval Gems Model LS-800-A or approved equal.~~

~~2) Four level indicator shall provide: Low alarm, low level (supply pump on), high level (supply pump off), and high alarm (return pump on).~~

~~3) This contractor shall coordinate equipment and installation with the electrical and plumbing contractor for compatibility of equipment and systems.~~

~~e. Permits:~~

1) Pay for and obtain all required installation permits <<from the San Francisco Fire Department>> prior to installation of any components of the fuel oil system.
2) The contractor shall obtain all required permits to operate per the requirements of the State Administrative Code or the local agency regulations, and shall pay all costs for such permits, and shall perform all the required tests. Such permits shall be posted under glass at the site of the work.

f. Testing: Tank shall be tested at the factory with 5 PSI pressure with no leaks in 24 hours.

g. Unit Package: The pump, driver, diesel fuel day tank and all controls and necessary attachments, specified herein, shall be purchased under a unit contract. The installing contractor shall assume unit responsibility and shall provide the services of a qualified engineer to be available to conduct final acceptance test along with Underwriting Authorities.

D. <<Closed>> Loop Fire Pump Flow Test

1. Fire pumps shall have a <<closed>> loop for testing, including a Gerand Fire Pump Test Meter with 6" Venturi Mode K-750-6 (743) rated for 500 PSI (M-750-6 (743) rated for 175 PSI) or approved equal. Meter shall be wall mounted reading directly in PM, meter range 450 to 1500 <<<300 to 1500>>> PM. Provide mud leg and auxiliary drain in piping to meter.

E. Jockey Pump JP-1

1. Pump shall be designed for the capacity scheduled on the drawings. Pump shall be turbine type with cast iron case, bronze impeller, steel shaft, and 480 V/3 pH/60 Hz, 3500 RPM motor. Peerless model J or approved equal.
2. Jockey Pump Control Panel: Jockey pump control equipment shall be completely assembled, wired, and tested at the factory. The controller shall be marked "Fire Jockey Pump Controller". All equipment shall be enclosed in one or more approved drip-tight enclosures. Controller shall be a Hubble Industrial Controls Co. or approved equal of the combined manual and automatic type incorporating the following:
   a. Externally operable fusible disconnect switch.
   b. Across the line motor starter.
   c. Three position pilot switch "Manual-Off-Automatic".
   d. Running period timer to keep motor running for a predetermined time after each automatic start and thus prevent too frequent starting and stopping of the motor.
   e. Pressure regulator with adjustable cut-in pressure points, which control the automatic operation of the motor.

F. Fire Pump Tests

1. Field acceptance tests shall be performed as required by NFPA Pamphlet #20. All field tests shall be arranged with and witnessed by the representatives of the Owner, Architect, Fire Department, and Manufacturer.

G. Sequence of Operation

1. Upon lowered system pressure the jockey pump shall start. Upon further lowering of system pressure, the electric driven pump shall automatically start. And further lowering of the system pressure, the diesel driven pump shall automatically start. All controls to accomplish this sequence of starting shall be provided under this contract. Controls shall be field adjustable.

H. Fire Pump Test Header

1. Provide flush mounted test heater, one valved outlet per each 250 GPM.
2. Manufacturer: Potter Roemer 586 # chrome <<brass>> finish.

2.32 FIRE PUMP SEISMIC CALCULATIONS

~~A. Contractor to submit complete seismic restraint calculations for all submitted fire pumps, batteries, and fuel oil day tank. Calculations shall be signed by Registered Structural Engineer.~~

~~2.33~~1. ~~FIRE WATER STORAGE TANK~~

~~A. Tank shall be <<15,000 Gallon>> concrete structure by General Contractor, and shall be fitted by sprinkler contractor to meet all requirements of NFPA 22. <<Submit an alternative add price for furnishing and installing a steel tank instead of utilizing a concrete tank.>>~~

~~B. <<Two tanks shall be 7500 Gallons each and shall be built to meet all requirements of NFPA 22 steel gravity and suction tanks and shall be UL listed "above ground" tank. Tank shall be cement lined with 4 magnesium anodes for corrosion protection. Saddle wear pads shall be tack welded to shell of tank. Tank and lining shall have a 5 year warranty.>>~~

~~C. Tank shall have all tappings, drains, manholes, gauge glass, air vents, and an automatic supply water fill control. Cla-Val Company 2" Clayton #124 float valve with remote float control or approved equal. Sprinkler contractor to coordinate tank installation with general contractor.~~

~~D. Testing: In accordance with NFPA and local fire department requirements.~~

~~E. Water Level Alarm: UL listed Conductance actuated level controller for water storage tank complete with wall support bracket. Controller to consist of 120 VAC Control unit with differential control, remote sensor, and two Teflon coated probes with length to suit tank. The sensor to be secured to the support with Stainless Steel bolts.~~

~~1. Low level alarm switch to be below automatic water supply valve float and to indicate an alarm for low water level at minimum required tank capacity.~~
~~2. High level alarm switch to be above automatic water supply valve float and to indicate an alarm for high water level.~~
~~3. Coordinate with electrical for connection to life safety system and power. McDonnell & Miller series PCH or approved equal.~~

~~F. Vortex Plate: Provide 4 ft. by 4 ft. galvanized steel anti-vortex plate for fire pump suction line, maintain edge of plate 1'-0" from tank wall.~~

PART 3 - EXECUTION

3.1 GENERAL

A. This system to be installed by an experienced firm regularly engaged in the installation of automatic sprinkler system as specified by the requirements of the Specifications.

3.2 PERFORMANCE OF WORK

A. Examine areas and conditions under which materials are to be installed. Layout the system to suit the different types of construction and equipment as indicated on the drawings and in accordance with NFPA Pamphlet No. 13, 14, 20 and 24.

B. Work to start immediately after authorization has been given to proceed so that the overall progress of the construction is not delayed.

C. Coordinate with other trades as necessary to properly interface components of the sprinkler system.

D. Follow manufacturer's directions and recommendations in all cases.

E. The omission from the drawings or Specifications of any details of construction, installation, materials, or essential specialties shall not relieve the Contractor from furnishing the same in place for a complete system.

3.3 TEMPORARY FIRE PROTECTION

A. Provide all temporary valving, piping, Siamese connections and other components as directed by the fire agency office during all phases of construction.

3.4 INSTALLATION - GENERAL

A. Fire protection system shall be installed in accordance with the approved Drawings. The finished ceiling is not to be erected until all fire protection piping has been installed, tested, and inspected. Sprinkler heads located in the electrical equipment, elevator, or similar rooms shall be furnished with deflectors to prevent water spray on equipment.

B. Before connection to the overhead piping, all underground piping shall be flushed with water flowing at velocity and quantity required by the installation standards specified above in this Section of the Specifications.

C. The arrangement of all pipes shall conform to all architectural requirements and field conditions, shall be as straight and direct as possible, forming right angles or parallel lines with building walls and other pipes, and shall be neatly spaced. Offsets will be permitted only where required to permit the pipes to follow the walls. Standard fittings shall be used for offsets. All risers shall be erected plumb and true, shall be parallel with the walls and other pipes, and shall be neatly spaced. All work shall be coordinated with HVAC, Plumbing, Electrical and Structural work in order to avoid interference and unnecessary cutting of floors or walls. All underground or concealed work shall be insepcted before the construction is closed up.

D. All sprinkler heads to be installed in ceilings throughout the scope of work building as listed in Section 2.6. All areas without ceilings shall have rough brass upright or pendent heads as shown on drawings.

E. Sprinkler heads in all finished areas are to be installed on a true axis line in both directions, with maximum deviation from the axis line of 1<<2>> inch plus or minus and shall be plus or minus 1" within center of tile. At the completion of the installation, if any heads are found to exceed the above-mentioned tolerance, they shall be removed and reinstalled.

F. No pipes or other apparatus shall be installed so as to interfere in any way with full swing of doors.

G. The arrangement, positions, and connections of pipes, drains, valves, etc., shall be as required by NFPA Pamphlet #13 for all areas to be sprinklered. However, the right is reserved by the Architect to change the location of any item to accommodate conditions, which may arise during progress of the work, without additional compensation for such changes provided that no additional heads are required prior to the installation of the work.

H. Where required, piping shall be installed concealed in building construction, or though steel beams, to obtain adequate head room.

I. All pipe throughout the job shall be reamed smooth before being installed. Pipe shall not be split, bent, flattened, or otherwise injured either before or during installation.

J. Provide protective pans under pipes passing over high voltage electrical bus duct or switchgear equipment. The pan shall be constructed of 12 gauge black iron with a 6 inch lip, the corners being welded to make the pans watertight. Each pan shall be given three coats of Rust-Oleum paint and shall be supported by pipe hangers. The pan shall drain clear of the bus duct or switchgear.

K. All pipe interiors shall be thoroughly cleaned of foreign matter before installation, and shall be kept clean during installation by plugging or other approved means. Piping shall be covered with visqueen during storage. Piping that shows signs of rusting will be removed from job site and replaced.

L. Field Connections: Any modifications to system required by field conditions, physical equipment changes or compliance with code regulations shall be made promptly without cost to Owner.

M. Interference: No piping or sprinkler devices shall interfere with the operations of any door, window or mechanical and electrical systems. No part of this system shall visibly be installed in the physical parameter of any window. <<Sprinkler mains and branch piping shall not interfere with existing or future ceiling, light fixtures and HVAC diffusers.>>

N. Threaded Pipe: Threads shall be clean cut, standard and tapered. Threads shall be made up using flaked graphite and lubricating oil, piping compound or Teflon tape applied to the male threads only.

O. Grooved Pipe: Installation shall be as prescribed in the Victaulic Piping Manual only. Holes in the piping are to be made in the fabrication shop, not at the job site. Contractor shall provide at the project site a sample of each type of coupling (threaded, standard grooved coupling and mechanical type), showing complete assembly with pipe connections. <<Couplings will not be installed until samples are approved by the Architect. Architect's approval does not eliminate the Contractor's final approval by the fire agency's office.>>

P. Keep all pipe and other openings closed to prevent entry of foreign matter. Cover all equipment and apparatus to protect against dirt, water, chemical or mechanical damage, before and during construction period. Restore to original condition all apparatus and equipment damaged prior to final acceptance, including restoration of damaged shop coats of paint.

Q. Location of sprinkler piping is critical.

1. Where ceiling space is at a minimum under beams location of ductwork takes precedence, coordinate accordingly.
2. Include in base bid (3) two-hour coordination meetings with Owner, Architect, and Engineer for coordination of sprinkler pipe routing.
3. Coordinate beam and shear wall penetrations with Structural Engineer. Obtain written approval for all beam penetrations from Structural Engineer.

~~R. Elevator Pits: For hydraulic elevators provide sprinkler heads in elevator pits per elevator code. Provide control valve with tamper switch to each pit area. Coordinate with Division 26 Fire Alarm System.~~

~~S.~~R. Tracer wire shall be wrapped and taped to non-metallic underground piping at maximum 20 foot intervals.

3.5 EXCAVATION AND BACKFILL

A. Trench and excavation work shall be done in a neat workmanlike manner, of the depth required by the authorities and/or agencies having jurisdiction. Pipe crown shall not be less than 30 inches below the finished ground surface. After the pipe has been properly tested and inspected, trench shall be backfilled with sand, or an approved sandy material, to a depth of 6 inches above the pipe. Backfill material shall be consolidated by tamping or by saturating with water and vibrating. Subsequent backfill shall consist of the original excavated material, free of organic matter, placed in 6 inch layers and compacted layer by layer by means of power driven vibrators.

B. Replace to original condition all turf, plants, concrete, asphalt, or other improvements disturbed by trenching. In graded, unpaved areas, backfill trenches with crown 8 inches above the surrounding surface.

3.6 SLEEVES AND FLASHINGS

A. Wherever pipes are exposed and pass through walls, floors, partitions or ceilings, they shall be fitted with chromium plated steel escutcheons held in place with setscrews. Care shall be taken to protect the escutcheons during the course of construction.

B. Penetrations through fire rated walls and floors shall be sealed with listed mastic of similar fire rating.

3.7 HANGERS, INSERTS, SUPPORTS, AND SWAY BRACING

A. Hangers and supports shall be installed per NFPA #13 sections on Hangers and Protection of Piping Against Damage Where Subject to Earthquake. Provide restraint from movement at end sprinkler on branch line per NFPA 13.

B. Bending of threaded hanger rod is not allowed. All powder driven anchor pins in concrete are not allowed.

~~C. <<Upgrade existing end sprinklers on branch line with new restraint from movement device.>>~~

3.8 SAFETY TESTING & VERIFICATION

A. Flush, test, and inspect sprinkler piping systems according to NFPA 13 Chapter "System Acceptance."

B. Provide NFPA 13 Contractor's Material & Test Certificate Form 85A for above ground piping and Form 85B for underground piping.

C. Provide manpower to test the function and performance of all Life Safety System components and devices per floor and per zone basis in accordance with the local requirements.

~~3.9 FIRE PUMP COMMISSIONING~~

~~A. Starting Procedures: Follow manufacturer's written procedures. If no procedures are prescribed by manufacturer, proceed as follows:~~

1. ~~Verify that specialty valve, trim, fittings, control and accessories have been installed correctly and operate correctly.~~
2. ~~Verify that fire pumps and accessories have been installed correctly and operate correctly.~~
3. ~~Verify that jockey pumps and accessories have been installed correctly and operate correctly.~~
4. ~~Verify that specified tests of piping are complete.~~
5. ~~Check that damaged sprinklers and sprinklers with paint or coating not specified have been replaced with new, correct type of sprinklers.~~
6. ~~Check that sprinklers are correct type, have correct finish and temperature ratings, and have guards where required for applications.~~
7. ~~Check that potable water supplies have correct type of backflow preventor.~~
8. ~~Check that fire department connections have thread compatible with local fire department equipment and have correct pressure rating.~~
9. ~~Fill wet-pipe sprinkler systems with water.~~
10. ~~Energize circuits to electrical equipment and devices.~~
11. ~~Start and run jockey pumps.~~
12. ~~Adjust operating controls and pressure settings.~~

~~B. Perform fire pump field acceptance test as indicated elsewhere in this section. Operate system as required.~~

~~3.10~~3.9 IDENTIFICATION

A. In addition to the requirements of Section 210500, provide pipe markers every 20 feet, once in every room, and at each building level traversed, minimum. <<Stencil riser/zone numbers on risers.>>

B. Provide hydraulic design data nameplates on the riser of each sprinkler system in accordance with NFPA 13

C. Equipment such as valves, drains, etc., shall be provided with signs that identify type of equipment and service. The tag shall be securely fastened to the handle or spindle of the valve by a brass chain. Furnish four schedules of valves so tagged. There shall also be furnished four diagrammatic charts showing schematically the complete sprinkler system with major control valves and numbers thereof. One set of Schedules and charts shall be mounted in glazed frames located where directed.

~~3.11~~3.10 AS-BUILT RECORD DRAWINGS AND CERTIFICATION

A. As-built Record Drawings are to be kept up-to-date and the Master Copy kept at the job site. Prior to final acceptance of work being approved, these drawings are to be turned over to the Owner's Representative for approval.

B. Written certification from the insuring agents, and authorities having jurisdiction that the tests were satisfactory.

C. After installation is complete and tests satisfactorily approved, deliver test certificates and approval by the local Fire Authorities and the FMA to the architect. Final acceptance of sprinkler/standpipe system by Owner's Representative shall be contingent upon receipt of certificate and approval from authorities having jurisdiction and for the delivery of final As-Built Drawings.

D. Combustible concealed spaces above ceiling to be sprinkered. May areas will have no access upon completion. Addition of access panels will not be permitted.

~~C.~~E. Space below raised access floor to have all combustible construction covered with G.W.B. and/or sheet metal to avoid sprinkers.

END OF SECTION

SECTION 22 21 13 - PLUMBING PIPING, VALVES AND SPECIALTIES

PART 1 - GENERAL

1.1 APPLICABLE REQUIREMENTS

A. All work to be furnished and installed under this section shall comply with all the requirements of General Conditions, Supplemental Conditions, Division 01 - General Requirements, Section 220500 - Basic Materials and Methods, and other Sections in Division 22 specified herein.

1.2 SCOPE

A. All work to be furnished and installed under this Section shall comply with all the requirements of Division 01, and shall include, but not necessarily be limited to the following:

1. Pipe and Fittings
   a. Sanitary waste and vent
   b. Storm drain and overflow
   c. Cold water
   d. Hot water
   e. Natural -gas
   ~~f. Compressed air.~~
   ~~g. Fuel oil~~
2. Valves
   a. Water valves
   ~~b. Backwater valves~~
   ~~c.~~b. Natural gas valves
   ~~d. Compressed air valves~~
   ~~e.~~c. Balancing valves
   ~~f. Fuel oil valves~~
   ~~g. Backflow prevention valves~~
   ~~h. Pressure reducing valves~~
   ~~i.~~d. Gas pressure regulator valves
   ~~j. Thermostatic mixing valves~~
   ~~k. Solenoid valves~~
   ~~l. Medical valves~~
   ~~m. Process valves~~
3. Thermometers and gauges
4. Piping specialties
   a. Pipe escutcheons
   b. Strainers
   c. Drip pans
   d. Air vent
   e. Dielectric unions
   f. Unions
   g. Flanges
   h. Pipe sleeves
   i. Sleeve seals
   j. Valve boxes
   k. Pipe coating
   l. Gas connectors

1.3 RELATED WORK SPECIFIED ELSEWHERE

A. Section 220500: Basic Materials and Methods

B. Section 220501: Plumbing

C. Section 224000: Plumbing Fixtures

~~D. Section 221123: Plumbing Equipment~~

~~E.~~D. Division 26: Electrical

1.4 QUALITY ASSURANCE

A. Manufacturers Qualifications:

1. Manufactured items furnished shall be the current, cataloged product of the manufacturer.
2. Replacement parts shall be readily available and stocked in the USA.

B. Codes and Standards:

1. All work shall be in full accordance with all applicable codes, ordinances and code rulings.
2. The Contractor shall furnish without any extra charge the labor and material required for compliance of codes.
3. Perform all tests required by governing authorities and as required under all Division 22 Sections. Provide written reports on all tests.
4. Electrical devices and wiring shall confirm to the latest standards of NEC; all devices shall be UL listed and so identified.
5. All plumbing work shall comply with the Americans with Disabilities Act (ADA).
6. All excavation work must comply with all provisions of state laws including notification to all owners of underground utilities at least 48 business day hours, but not more than 10 business days, before commencing an excavation.

1.5 SUBMITTALS

A. Product Data: Submit manufacturer’s technical product data for all piping, valves and specialties indicating dimensions, valve CV, tolerances etc.

B. Shop Drawings: Submit shop drawings indicating underground piping installation showing all fittings with inverts. Indicate all footings and grade beams.

C. Maintenance Data: Submit maintenance instructions on accordance with requirements of Division 01.

PART 2 - PRODUCTS

2.1 GENERAL

A. Furnish and install all new material, equipment, and apparatus hereinafter specified unless specifically noted otherwise. All material, equipment, and apparatus shall be identified by the manufacturer's name, nameplate, and pertinent data.

1. All pipe, pipe fittings and valves shall be manufactured in North America. Alternatives may be acceptable, but must be submitted and approved by the Engineer prior to bidding.

OR

2. Upon request, the engineer shall be furnished certification by the manufacturer, stating samples representing each lot have been tested and inspected as indicated in governing ASTM specifications have been met. Certification shall be accompanied by test reports as prepared in accordance with relevant ASTM sections governing Test Methods and Inspection. Tension Tests reports shall include breaking load, machined diameter of the test bars, and calculated tensile strength. Certification shall include the legal name and address of the manufacturer.

B. Type M copper piping is not acceptable for any pressure water piping unless specifically noted otherwise.

C. For all Grade B piping specified below grade provide a mill report with production identification numbers for piping submitted to permit tracking of pipe by mill and production lot.

D. All materials, equipment, and apparatus are mentioned as standards unless noted otherwise. The words "or approved equal" shall be considered to be subsequent to all manufacturer's names used herein, unless specifically noted that substitutes are not allowed.

2.2 STANDARD PIPE AND FITTING

A. Natural Gas Pipe & Fitting (Above Grade)

1. Pipe: ASTM A53, Schedule 40 black steel.
   a. Fittings: 150 lb. rating. ANSI B16.3, malleable iron threaded; ANSI B16.5, flanged; ANSI B16.9, steel.
   b. Joints: 2" and smaller, threaded (except in the case of piping located in shafts <<or plenums>> which must be welded); all piping inside the building 2-1/2" and larger, ANSI B16.25 bevelweld, ANSI B16.5 flanges, or ANSI B16.11 socket weld.
2. Flexible Pipe System: Corrugated stainless steel tubing (CSST) equal to Gastite® corrugated stainless steel tubing manufactured from ASTM A240, type 304 stainless steel with a minimum nominal wall thickness of 0.010". System shall comply with ANSI LC-1 "Standard for Fuel Gas Piping Using Corrugated Stainless Steel Tubing (CSST), and carrying listings by CSA International (Certification Number 1009875), ICC Evaluation Services (Report Number ESR-1031) and IAPMO Research & Testing (Certificate of Listing Number 3250). System to be fire rated for installation in plenum applications.
   a. Fittings and joints: Corrugated stainless steel tube fittings and joints equal to Gastite® mechanical tube fittings manufactured from ASTM B16 type 360 brass whose design incorporates a double wall flare for gas-tight seal with Jacket Lock™, mechanical capture of the jacket for enhanced tubing protection.

B. Natural Gas Piping (Below Grade)

1. Polyethylene, Grade 23, Type II, ASTM 2513, plain ends, heat fused joints, orange finish.

~~C. Fuel Oil Piping:~~

~~1. Pipe:~~

~~a. Above Grade Carrier Pipe: ASTM 53 Schedule 40 black steel pipe with factory applied corrosion resistant coating. Galvanized steel pipe is not acceptable.~~
~~b. Above Grade Containment Pipe: ASTM 53 Schedule 10 black steel pipe with factory applied corrosion resistant coating. Galvanized steel pipe is not acceptable.~~
~~c. Below Grade Carrier Pipe: UL listed fiberglass piping conforming to ASTM D-2996 as manufactured by Smith.~~
~~d. Below Grade Containment Pipe: UL listed fiberglass piping conforming to ASTM D-2996.~~

2. Fittings:
   a. Above Grade Carrier Pipe Fittings: ANSI B16.4 malleable iron threaded, ANSI B16.5, flanged; ANSI B16.9, steel bevelweld.
   b. Above Grade Containment Pipe Fittings: Victaulic grooved fittings.
   c. Below Grade Carrier Pipe Fittings: UL listed fiberglass fittings as manufactured by Smith.
   d. Below Grade Containment Fittings: UL listed "Clamshell" fiberglass fittings as manufactured by Smith.
3. Joints:
   a. Above Grade Carrier Pipe: 2" and smaller, threaded (except piping in shafts or plenums which must be welded); 2 ½" and larger, ANSI B16.25 bevelweld, ANSI B16.5 flanges or ANSI B16.11 socket weld.
   b. Above Grade Containment Pipe: Victaulic type grooved pipe couplings or equivalent by Gruvlok.
   c. Below Grade Carrier Pipe: Threaded and bonded (T.A.B.) system as manufactured by Smith.
   d. Below Grade Containment Pipe: UL listed "Clamshell" fiberglass fittings as manufactured by Smith.

~~D.~~C. Trap Primer Piping:

1. Pipe: Domestic Only, ASTM B88, Type K, soft drawn copper water tube. Fittings: No joints below ground. For pipes below grade double wrap with Scotch Wrap #51 or PASCO Wrap, with 50% overlap.

~~E.~~D. Domestic Water Pipe & Fittings (Below Grade):

1. Pipe: ASTM B88, Type K hard drawn copper water tube.
2. Fittings: Domestic Only, Elkhart, ANSI B16.22, wrought copper, 95%-5% tin-antimony solder joints. Wrap underground piping with Scotch Wrap or Pasco Wrap.

~~F.~~E. Domestic Cold Water Pipe and Fittings (Above Grade):

1. Pipe: Schedule 10 type 304 stainless steel with roll groove fittings. ASTM A268.
2. Fittings: Victaulic grooved stainless steel fittings.
3. Joints: Roll groove.

~~G.~~F. Condensate and indirect drains:

1. Pipe: ASTM B88, Type M, hard drawn copper water tube.
2. Fittings: ANSI B16.22, wrought copper.
3. Joints: Lead-free solder joints. Solder shall be lead-free nickel/silver bearing solder meeting ASTM B-32, ASTM B-828. Flux shall be water soluble and shall meet CDA standard test method 1.0 and ASTM B813-91.
4. Insulate condensate drain pipes with minimum ½" insulation to prevent moisture dripping from pipe.

~~H.~~G. Domestic Hot and Cold Water Pipe & Fittings (Above Grade):

1. Pipe: ASTM B88, Type L, hard drawn copper water tube.
2. Fittings: ANSI B16.22, wrought copper, 95%-5% tin-antimony solder joints. <<Alternative Domestic Water Pipe Fitting (See Section 3.8F): Copper press fittings

shall conform to the material and sizing requirements of ASME B16.22. O-rings for copper press fittings shall be EPDM. Viega/Ridgid or approved equal.>>

~~I. Domestic Hot and Cold Water Pipe & Fittings-Alternative (Above Grade):~~

~~1. Pipe: ASTM F876 and F877, ViegaPEX cross linked high density polyethylene.~~
~~2.~~3. ~~Fittings: ASTM F876, F877 and ASTM/NSF-61, Bronze PEX Press Fittings, Viega~~ Pureflow bronze PEX Press Fittings and stainless steel press sleeves.

~~J.~~H. Domestic Cold and Hot Water Pipe & Fittings Above and Below Grade (2-1/2" and Larger):

1. Pipe: ASTM D1784, Corzan® IPS (iron pipe size) Rigid CPVC (chlorinated polyvinyl chloride) Schedule 80, Cell Class of 24448, NSF certified. Pipe shall meet ASTM F441.
2. Fittings: Fitting shall meet Cell Class 23447 and carry a pressure rating listed by the Plastics Pipe Institute (PPI) of PPI TR-3 and in accordance with ASTM D-2837. ASTM F439 socket, ASTM F437 for threaded CPVC Schedule 80 fittings. Threaded fittings shall have taper pipe threads in accordance with ASTM F1498. Unions and flanges shall meet the requirements of ASTM F1970. Two step-low VOC, ASTM F493 & ASTM F656 primer and solvent cement application per manufacturer's instructions and in accordance with ASTM D-2855 and ASTM F402.
3. Compound manufacturer shall conduct a program that lists those ancillary building products (including, but not limited to: fire stops/caulks, thread sealents, leak detectors/snoop, etc…) that are chemically compatible with the CPVC compounds (pipe and fittings). This compatibility program shall be administered by an independent third party testing agency.
4. Contractor shall have received training from a manufacturer trained representative, and shall have received and be able to show proof of training via the use of "Proof of Training" card or other completion training certificate for the system he is installing.

~~K.~~I. Domestic Cold and Hot Water Pipe & Fittings Above and Below Grade (2" and Smaller):

1. Pipe: ASTM D1784, FlowGuard Gold® CTS (copper tube size) Rigid CPVC (chlorinated polyvinyl chloride) pipe with a minimum Cell Class of 24448, NSF certified. Pipe shall meet ASTM D2846.
2. Fittings: Fitting shall meet ASTM D1784 with a Cell Class of 23447. One step-low VOC, ASTM F493 solvent cement, application per manufacturer's instructions and in accordance with ASTM D-2855 and ASTM F402.
3. Compound manufacturer shall conduct a program that lists those ancillary building products (including, but not limited to: fire stops/caulks, thread sealents, leak detectors/snoop, etc…) that are chemically compatible with the CPVC compounds (pipe and fittings). This compatibility program shall be administered by an independent third party testing agency.
4. Contractor shall have received training from a manufacturer trained representative, and shall have received and be able to show proof of training via the use of "Proof of Training" card or other completion training certificate for the system he is installing.

~~L.~~J. Sanitary Sewer, Vent, Rainwater Pipe & Fittings:

1. Pipe: Tyler or AB&I or Charlotte Pipe and Foundry, ASTM A-74, ASTM A-888 cast iron, bituminous coated, "No-Hub". Pipe and fittings shall be marked with the collective trademark of the Cast Iron Soil Pipe Institute and manufactured by AB &I, Charlotte or Tyler. Pipe showing rust or cracks in coating shall be removed and replaced.
2. Fittings: No-hub, ASTM A-888.
3. Couplings Below Grade: Heavy Duty Type 304 stainless steel couplings conforming to FM 1680 with neoprene sealing sleeve conforming to ASTM C-1540 having minimum shield thickness of 28 gauge. Husky SD-4000 or Clamp All 125 only.

4. Couplings Above Grade: Type 304 stainless steel couplings conforming to ASTM C-1540 and neoprene sealing sleeve, having minimum shield thickness of 34 gauge. Anaco or Ideal.
5. ~~Couplings Above Grade: Band type stainless steel couplings conforming to ASTM C-1540 having a minimum thickness of 31 gauge with neoprene sealing sleeve conforming to ASTM C-564. Husky 2000 or Clamp All 80 only.~~

~~M. Sanitary Sewer, Vent, Rainwater Pipe & Fittings Alternative:~~

1. ~~Pipe: Charlotte Pipe and Foundry, ASTM F 628, ASTM D 3965, NSF Standard 14, ABS (acrylonitrile-butadiene-styrene) compound with Cell Class 42222. Use in non-pressure applications where operating temperature will not exceed 160ºF.~~
2. ~~Fittings: ASTM D 2661, ASTM D 2235, ABS DWV Fittings shall be by a single manufacturer and to be installed in accordance with manufacturer's recommendations. Solvent cement joints.~~

~~N. Sanitary Sewer, Vent, Rainwater Pipe & Fittings Alternative:~~

1. ~~Pipe: Charlotte Pipe and Foundry, ASTM D 1785, ASTM D 1784, NSF Standard 14, PVC Schedule 40 (polyvinyl chloride) compound with Cell Class 12454. Use in non-pressure applications where operating temperature will not exceed 140ºF~~
2. ~~Fittings: ASTM D 2665, ASTM D 2564, PVC DWV Fittings shall be by a single manufacturer and to be installed in accordance with manufacturer's recommendations. Solvent cement joints.~~

~~O.~~K. Rainwater Leader Pipe and Fittings (Exposed, Above Grade):

1. Pipe: ASTM B306, DWV class, copper tube.
2. Fittings: ANSI B16.23 cast bronze or ANSI B16.29 wrought copper. Drainage pattern fittings.
3. Joints: Lead free solder. Lead solder shall not be present at the job site.

~~P.~~L. Vent Piping (Above Grade) (Contractor's Option):

1. Pipe: ASTM B306, DWV class, copper tube.
2. Fittings: Elkhart, ANSI B16.23 cast bronze or ANSI B16.29 wrought copper, sweat solder no lead joint. Submit sample of solder for Engineer's review and approval.

~~Q.~~M. Water Service to Building:

1. Pipe: Class 52 ductile iron, ANSI A21.51, AWWA C1510-70, 150 psi cement lined; factory encased with 8 mil polyethylene tube or sheet.
2. Fittings: ANSI A21.10 mechanical joint, AWWA C110-1971, 250 psi. fittings to be double field wrapped with 2", 20 mil vinyl tape, 50% overlap.
3. All fittings shall be restrained with 2000 psi thrust blocks in accordance with NFPA
4. Fire Protection: Refer to Specification Section 211000.

2.3 VALVES: GENERAL

A. General: Valve ratings shall exceed respective system operating pressures by 50% (minimum). All valves shall be line size unless otherwise noted.

B. Product Data: Submit manufacturer's technical product data, including installation instructions for each type of valve. Include pressure drop curve or chart for each type and size of valve. Submit valve schedule showing manufacturer's figure number, size, location, and valve features for each required valve.

C. Shop Drawings: Submit manufacturer's assembly-type (exploded view) shop drawings for each type of valve, indicating dimensions, weights, materials, and methods of assembly of components.

D. Acceptable manufacturers (manufacturer and model number listed for individual valves indicates minimum acceptable by all manufacturers):

1. Gate, Ball, Check or Butterfly: Apollo, Hammond, Nibco (commercial grade, US manufacturer only), Milwaukee, Victaulic or Watts.
2. Lubricated Plug Valves: Homestead, Resun, or Rockwell.
3. Backflow Preventors: Apollo, Ames, Febco, Cla-Val, Watts or Wilkins.
4. Pressure Reducing Valves: Apollo, Cash-Acme, Cla-Val, Watts, or Wilkins.
5. Solenoid Valves: ASCO, Automatic or Magnatrol.
6. Circuit Setters: Griswold (Venturi with characterized ball valve only), Wheatley (Y-globe type only), Armstrong, or Tour & Anderson.

E. Valve Identification: Provide valves with manufacturer's name (or trademark) and pressure rating clearly marked on the valve body.

F. Operators: Provide handwheels, fastened to valve stem, for valves other than quarter-turn. Provide lever handle for quarter-turn valves, other than plug valves. Provide one wrench for every 10 plug valves, and one in each size. Provide extended levers/stems for valves on insulated lines. For manual valves 2 ½" and larger located 8 feet above the floor in mechanical rooms provide chain operator to permit operating the valve from 4'-0" above floor.

G. Valve Features:

1. General: Provide valves with features indicated and, where not otherwise indicated, provide proper valve features. Comply with ASME B31.9 for building services piping, and ASME B31.1 for power piping.
2. Drain: Comply with MSS SP-45, and provide threaded pipe plugs.
3. Flanged: Valve flanges complying with ANSI B16.1 (cast iron), ANSI B16.5 (steel), or ANSI B16.24 (bronze).
4. Threaded: Valve ends complying with ANSI B2.1.
5. Solder-Joint: Valve ends complying with ANSI B16.18.
6. Flangeless: Valve bodies manufactured to fit between flanges complying with ANSI B16.1 (cast iron), ANSI B16.5 (steel), or ANSI B16.24 (bronze).

2.4 DOMESTIC PLUMBING SERVICE VALVES

A. Gate Valves:

1. 2" and Smaller: Class 125, MSS SP-80, ASTM B62 cast bronze body, soldered ends, bronze bonnet, bronze wedge, rising stem, brass packing gland, non-asbestos packing and aluminum hand-wheel.
2. 2-1/2" and Larger: Class 125, MSS SP-70, ASTM A126 Grade B cast iron body, flanged ends, cast iron bonnet, cast iron wedge, bronze trim, rising stem, brass packing gland, non-asbestos packing and cast iron hand-wheel.

B. Butterfly Valves:

1. 3" and Larger: MSS SP-67, lug wafer, ductile iron body, stainless steel disc, stainless steel stem, EPDM seat, memory stop control, lever handle thru 5" size and worm gear operator for 6" and larger. Mount stem in horizontal position. Hammond 6100 series.

C. Ball Valves:

1. 2 1/2" and Smaller: 600 psi, 2 piece, bronze body, soldered ends for copper pipe and threaded ends for iron pipe, chrome plated brass ball, Teflon seat, brass stem, steel handle, full port. Apollo 70-200 series.

D. Check Valves:

1. 2" and Smaller: Class 125, MSS SP-80, ASTM B62 and ASTM B16, cast bronze body, soldered ends for copper pipe, screwed cap, swing type, Teflon bronze disc.
2. 2-1/2" and Larger: Class 125, MSS SP-71, ASTM A126 class B cast iron body, bolted bonnet flanged ends, bolted cap, swing type, cast iron disc with bronze face rings.
3. Vertical or High Flow: Class 125, cast bronze, high-flow body, TFE seat, brass check, stainless steel guide and spring. Watt #6015.

2.5 NATURAL GAS AND~~,~~ LP GAS ~~AND OIL SERVICE VALVES~~

A. Ball Valves:

1. ½" and ¾": Brass body, U.L. listed, CSA approved for pressure of system, bronze ball valve, 175 WOG, with integral lever handle. Apollo 64 series or Watts #FBV-1.
2. 1" thru 1-1/2": 175 psi working pressure, CSA and UL approved, bronze body, welded ends, stainless steel ball, stainless steel stem, steel handle with memory stop tab, conventional port.
3. Lubricated Plug Valve, 2" and Larger: Class 125, MSS SP-78, 200 PSI, UL listed, CSA approved for pressure of system, lubricated plug type, semi-steel body, loose wrench operated, straight way pattern round port, combination button head fitting and lubricant screw, Teflon seal and discs.

B. Seismic Gas Shutoff Valves:

1. ¾” thru 2” (low and medium pressure, screwed body): U.L. Listed valve meeting ASCE 25-97, positive closure, soft seal seating, visual open-close indicator, manual reset, and closure time interval within 5 seconds when subjected to a sinusoidal oscillation with peak acceleration of 0.3G and a period of 0.4 seconds. Koso/California Valve Series EV, or approved equal, sized for 0.5 PSI or 20 PSI max operating pressure, respectively.
2. 2”, 3” and 4” (High pressure, screwed body): U.L. Listed valve meeting ASCE 25-97,manual reset, soft seat construction for positive sealing, visual open-close indicator, tripping mechanism with non-creeping rolling latch, and closure time interval within 5 seconds when subjected to sinusoidal oscillation with peak acceleration of 0.3G and a period of 0.4 seconds. Koso/California Valve Series EV315, or approved equal, sized for 20 PSI max. operating pressure.
3. 6” (high Pressure, Flanged body): U.L. Listed valve meeting ASCE 25-97,manual reset, soft seat construction for positive sealing, visual open-close indicator, tripping mechanism with non-creeping rolling latch, and closure time interval within 5 seconds when subjected to sinusoidal oscillation with peak acceleration of 0.3G and a period of 0.4 seconds. Koso/California Valve Series EV317, or approved equal, sized for 60 PSI max. operating pressure.

~~2.6 COMPRESSED AIR AND VACUUM SERVICE VALVES~~

~~A. Ball Valves:~~

~~1. 2" and Smaller: 175 psi working pressure, 3 piece bronze body, threaded ends, stainless steel ball, stainless steel stem, steel handle with memory stop tab, conventional port. Apollo 82-100 series.~~

~~B. Butterfly Valves:~~

~~1. 2-1/2" and Larger: MSS SP-67, lug wafer ductile iron body, stainless steel disc, stainless steel stem, EPDM seat, memory stop control, lever handle. Mount stem in horizontal position.~~

~~C. Air Vent Needle Valves:~~

1. ~~¾" and Smaller: 200 psi working pressure, needle globe valve, bronze body, threaded ends, bronze stem, steel wheel handle. Milwaukee #600.~~

~~2.7 BALANCING VALVES: MAXIMUM 125 PSIG SYSTEM WORKING WATER PRESSURE~~

~~A. Pressure Dependent Water Flow:~~

1. ~~½" and Larger: Construction and attachment style as required by piping system. Ball or globe valve design with memory stop. Valves shall be field adjustable. Install in pipe with minimum length of unrestricted straight pipe equivalent to five pipe diameters upstream and two pipe diameters downstream. Presso Venturi B-Plus series, Armstrong, or Tour & Anderson.~~

~~2.8 BACKFLOW PREVENTION VALVES~~

~~A. General: All backflow prevention valves shall be State approved and listed.~~

~~B. Reduced Pressure Zone Backflow Preventer for High Hazard Applications:~~

1. ~~2" and Smaller: Assembly shall consist of shutoff ball valves in inlet and outlet, and strainer on inlet. Assemblies shall include test cocks and pressure-differential relief valve located between two positive seating check valves and shall comply with requirements of ASSE Standard 1013 and AWWA C506. Bronze construction, threaded ends, stainless steel internal parts, and air gap fitting. Route pipe from air gap fitting to approved waste receptor. Watts #909-QT-S-HW valve with #909AG air gap fitting.~~
2. ~~2-1/2" and Larger: Assembly shall consist of shutoff OS&Y gate valves in inlet and outlet, and strainer on inlet. Assemblies shall include test cocks and pressure-differential relief valve located between two positive seating check valves and shall comply with requirements of ASSE Standard 1015 and AWWA C506. Epoxy coated cast iron body construction, flanged ends, stainless steel internal parts, bronze seats, and air gap fitting. Route pipe from air gap fitting to approved waste receptor. Watts #909-S-OSY valve with #909AG air gap fitting.~~

~~C. Double Check Valve for Low Hazard Applications:~~

1. ~~2" and Smaller: Assembly shall consist of shutoff ball valves in inlet and outlet, and strainer on inlet. Assemblies shall include test cocks and two positive seating check valves and shall comply with requirements of ASSE Standard 1015 and AWWA C510. Bronze construction, threaded ends, and stainless steel internal parts. Watts #007-QT-S.~~
2. ~~2-1/2" and Larger: Assembly shall consist of shutoff OS&Y gate valves in inlet and outlet, and strainer on inlet. Assemblies shall include test cocks and two positive seating check valves and shall comply with requirements of ASSE Standard 1015 and AWWA C506. Epoxy coated cast iron body construction, flanged ends, and stainless steel internal parts. Watts #709-S-OSY.~~

~~D. Atmospheric Vacuum Breaker: Assembly shall consist of a bronze vacuum breaker body with silicone disc, and full size orifice. Device shall be IAPMO listed, meet ASSE std. 1001, and ANSI std. A113.1.1 Chrome plated in finish areas.~~

~~E. Pressure Vacuum Breaker: Assembly shall consist of a one piece bronze or stainless steel body, with stainless steel spring loaded check, rubber diaphragm, and atmospheric vent, breakaway set screw. Provide chrome plated in finish areas.~~

~~2.9 PRESSURE REDUCING VALVES~~

~~A. Single seated, direct operated type; high capacity, having bronze body with strainer, by-pass feature, pressure gauge tappings and complying with requirements of ASSE Standard 1003. Select proper size for maximum flow rate and fail-off at inlet and outlet pressure indicated. Watts #U5 series or equal.~~

~~B. Single seated, pilot operated globe valve type having ductile iron body with FDA approved epoxy coating inside and out, with Y strainer, stainless steel seat, FDA approved diaphragm, copper control tubing, pressure gauge tappings and complying with requirements of ANSI Standard A112.26.2. Select proper size for maximum flow rate and fall-off at inlet and outlet pressure indicated. Watts 115 series or equal.~~

~~2.10 PRESSURE RELIEF VALVES~~

~~A. Pressure Relief Valves: Constructed in accordance with ASME, 125-pound setting, and so stamped. Size as required. Watts #740 series or equal.~~

~~B. Temperature and Pressure Relief Valve: Constructed in accordance with ASME, 125-pound setting, and so stamped. Size as required. Watts #100XL, 40XL, 140, N240, or 340 series or equal.~~

2.6

~~2.11~~2.7 GAS PRESSURE REGULATOR VALVES

A. Diaphragm operated, steel construction of size and capacity as indicated on drawings. Regulators shall be approved serving gas supplier, CSA and UL listed. Fisher, Sherwood, or approved equal.

~~2.12 THERMOSTATIC MIXING VALVES~~

~~A. General: Thermostatic valve constructed of brass and stainless steel, with screwdriver locking temp. regulator and adjustable check stops. Provide access door with cylinder lock. Finish as selected by Architect. Powers E480 or Leonard #210 SB.~~

~~B. Master: High-low master thermostatic assembly of size and capacity as indicated on drawings. Bi-metal motor, adjustable checkstops, inlet and outlet pressure gauges, thermometer with full port outlet ball valves shutoffs, locking temperature regulator and surface mount stainless steel cabinet as specified. Powers 1432-RC-E-Q or Leonard type TM186-PRV-RF-LTR-STSTL.~~

~~2.13 SOLENOID VALVES~~

~~A. UL listed, globe pattern bronze valve with threaded ends, stainless steel pilot, bronze piston, malleable iron solenoid assembly with ½" tapped conduit connections and Class "A" coil, 120 Volt, 60 Hertz. Solenoid valve shall be wired to the Fire Alarm System. The valve shall close instantly on application of current and open when de-energized. Provide solenoid valve on gas line into boiler and water heating rooms where the aggregate gas input is over 400,000 Btuh. Wire to "mushroom" button(s) outside of each door to room.~~

~~2.14 MEDICAL GAS VALVES~~

~~A. Refer to Section 226313.~~

~~2.15 PROCESS VALVES~~

B. ~~Refer to Section 222114.~~

~~A.~~

~~2.16~~2.8 FIRE PROTECTION VALVES:

A. Refer to Section 211000.

~~2.17~~2.9 THERMOMETERS AND GAUGES

A. General:

1. Certification: Provide meters and gauges whose accuracies, under specified operating conditions, are certified by manufacturer.
2. No mercury shall be used in thermometers due to hazardous material classification.
3. Acceptable Manufacturers: Weksler, Winters, Trerice, Marshalltown or US Gauge.

~~B. Thermometers:~~

~~1. Bi-Metal Type: Provide bi-metal glass thermometers of materials, capacities, and ranges indicated, designed and constructed in service indicated. Accuracy shall be 1% +/- full scale with adjustable recalibration.~~
~~a. Case: Type 300 series stainless steel, hermetically sealed, glass window, 3" diameter dial, with adjustable angle.~~
~~b. Adjustable Joint: Die cast aluminum, finished to match case, 180° adjustment in vertical plane, 360° adjustment in horizontal plane, with locking device.~~
~~c. Scale: Satin faced, non-reflective aluminum, permanently etched markings.~~
~~d. Stem: Stainless steel, adjustable angle socket, length to suit installation.~~
~~2. Glass Thermometer: Provide adjustable angle 9" thermometer of materials, capacities and ranges as appropriate to medium being measured and designed and constructed for service indicated. Accuracy to be 1% +/- of full scale.~~
~~a. Case: Aluminum or Valox~~
~~b. Temperature Sensitive Gage Liquid: Organic non-toxic. No mercury permitted.~~
~~c. Scale: Aluminum painted white with black markings.~~
~~d. Connection: ½" NPT with thermowell, 1 ¼" UNF swivel nut without thermowell.~~
~~3. Photovoltaic Cell Powered LCD Thermometer~~
~~a. Case: ABS Plastic~~
~~b. Accuracy: 1% of full scale.~~
~~c. Display: 16 LUX rating LCD display. Switchable Fahrenheit and Celcius.~~
~~d. Connection: 3/4" NPT with thermowell 1 ¼" UNF swivel nut without thermowell.~~
~~4. Range: Conform to the following:~~
~~1) Hot Water: 20°F - 240°F with 2°F scale divisions.~~
~~2) Cold Water: -40°F - 160°F with 2°F scale divisions.~~

~~C. Thermometer Test Wells:~~

~~1. Provide thermometer test wells as indicated, constructed of brass or stainless steel, pressure rated to match piping system design pressure. Provide 2" extension for~~

~~insulated piping. Provide cap nut with chain fastened permanently to thermometer well.~~

~~D. Temperature Gauge Connector Plugs:~~

~~1. Provide temperature gauge connector plugs pressure rated for 500 psi and 200°F (93°C). Construct of brass and finish in nickel-plate, equip with ½" NPS fitting, with self-sealing valve core type neoprene gasketed orifice suitable for inserting $^{1}/_{8}$" O.D. probe assembly from dial type insertion thermometer. Equip orifice with gasketed screw cap and chain. Provide extension, length equal to insulation thickness, for insulated piping.~~

~~E. Pressure Gauges:~~

~~1. General: Provide pressure gauges of materials, capacities, and ranges indicated, designed and constructed for use in service indicated.~~
~~2. Type: General use, 1% accuracy ANSI B40.1 grade A, phosphor bronze bourbon type, bottom connection.~~
~~3. Case: Drawn steel or brass, glass lens, 4-1/2" diameter.~~
~~4. Connector: Brass with ¼" male NPT.~~
~~5. Scale: White coated aluminum, with permanently etched markings.~~
~~6. Pressure differential range shall be 100 psig minimum for the appropriate application with maximum 1 psig divisions.~~

~~F. Pressure Gauge Cocks:~~

~~1. General: Provide pressure gauge cocks between pressure gauges and gauge tees on piping systems. Gauge cock constructed of brass with ¼" female NPT on each end, and "T" handle brass plug.~~
~~2. Syphon: ¼" straight coil constructed of brass tubing with ¼" male NPT on each end.~~
~~3. Snubber: ¼" brass bushing with corrosion resistant porous metal disc, through which pressure fluid is filtered. Select disc material for fluid served and pressure rating.~~

~~G. Pressure Gauge Connector Test Plugs:~~

~~1. Provide pressure gauge connector plugs pressure rated for 500 psi and 200°F (93°C). Constructed of brass and finish in nickel-plate, equip with ½" NPS fitting, with self-sealing valve core type neoprene gasketed orifice suitable for inserting 1/8" O.D. probe assembly from dial type insertion pressure gauge. Equip orifice with gasketed screw cap an chain. Provide extension, length equal to insulation thickness, for insulated piping.~~

~~2.18~~2.10 PIPING SPECIALTIES

A. General:

1. Provide factory-fabricated piping specialties recommended by manufacturer for use in service indicated. Provide piping specialties of types and pressure ratings indicated for each service, or provide proper selection to comply with installation requirements. Provide sizes as indicated, and connections, which properly mate with pipe, tube, and equipment connections. Where more than one type is indicated, selection is installer's option.

B. Pipe Escutcheons:

1. Provide pipe escutcheons as specified herein with inside diameter closely fitting pipe outside diameter, or outside of pipe insulation where pipe is insulated. Select outside diameter of escutcheon to completely cover pipe penetration hole in floors, walls, or ceilings; and pipe sleeve extension, if any. Furnish pipe escutcheons with nickel or chrome finish for occupied areas, prime zinc base paint finish for unoccupied areas.

2. Pipe Escutcheons for Moist Areas: For waterproof floors, and areas where water and condensation can be expected to accumulate, provide stainless steel, cast brass or sheet brass escutcheons, solid or split hinged.
3. Pipe Escutcheons for Dry Areas: Provide stainless steel escutcheons, solid or split hinged.

C. Low Pressure Y-Type Pipeline Strainers:

1. Provide strainers full line size of connecting piping, with ends matching piping system materials. Select strainers for 125% of the working pressure of piping system, with Type 304 stainless steel screens, with 3/64" perforations at 233 0.045" perforations per square inch.
2. Threaded ends, 2" and smaller: Cast-iron body, screwed screen retainer with centered blowdown fitted with hose bibb. Sarco, Wheatley or Mueller.
3. Flanged ends, 2-1/2" and larger: Cast-iron body, bolted screen retainer with off-center blowdown fitted with hose bibb. Sarco, Wheatley or Mueller.
4. <<Grooved ends 2 ½ and larger: Ductile iron body, bolted screen retainer with off center blowdown fitted with hose bibb. Victaulic or Gustin-Bacon.>>

D. Drip Pans:

1. Provide drip pans fabricated from 16-gauge galvanized sheet metal with watertight joints, and with edges turned up 2-1/2". Reinforce top by structural angles. Provide hole, gasket, and flange at low point for watertight joint and 1" copper drain line connection. Extend 1” drain to nearest approved receptor.

E. Air Vent with Valves:

1. Install in all closed and open loop water systems at high points of systems and at any other point necessary to free system of air. A shut-off valve shall be provided in riser to each automatic vent valve to facilitate servicing. A 3/8" type "L" copper tubing drain line shall be run to drain receptor to carry away water that valve discharges. Manual type vent may be used in lieu of automatic type, where specifically shown on the Drawings. Hoffman #79 or Dole.

F. Dielectric Unions:

1. Provide standard products recommended by manufacturer for use in service indicated, which effectively isolate ferrous from non-ferrous piping (electrical conductance), prevent galvanic action, and stop corrosion.

G. Dielectric Flanges: Provide dielectric flanges for flanged transitions between dissimilar metal piping. Watts Series 3100 or approved equal.

H. Unions:

1. Unions shall be of type specified in following schedule:
   a. Black Steel, 2" and smaller: 250 lb. screwed malleable iron, ground joint, brass to iron seat.
   b. Black Steel, 2-1/2" and larger: 150 lb. cast iron screwed flanged, flat faced, full faced gasket.
   c. Soldered Copper or Brass Pipe, 2" and smaller: 150 lb. cast bronze or copper, ground joint, non-ferrous seat with soldered ends.
   d. Screwed Copper or Brass Pipe, 2" and smaller: 150 lb. cast brass, ground joint, brass to brass seat, with threaded ends.
   e. Flanged Copper or Brass Pipe, 2-1/2" and larger: two (2) 150 lb. cast bronze flanges.
   f. Manufacturer: EPCO, Mueller, Stanley G. Flagg or Watts.

I. Flanges:

1. Provide flanges at flanged connections to equipment, tanks and valves. Faces of flanges being connected shall be alike in all cases. Connection of raised-face flange to flat-faced flange not permitted.
2. Use ASTM A307, Grade B, bolts and nuts for cast iron flanges and ASTM A193 for steel flanges. Regular square head unfinished bolts with heavy semi-finished hex nuts ASTM A194. Cadmium plated where exposed to weather. Rating: 150 lb. or 300 lb. in high pressure portions.
3. Type of pipe and corresponding flanges as follows:
   a. Screwed Black Steel Pipelines: 125 lb. black cast iron screwed flange, flat faces.
   b. Welded Steel Pipe, 150 lb. black forges steel welding flanges, 1/16" raised fact ASTM A181 Grade I. Use flat face when connected to flat faced companion flange.

J. Pipe Sleeves:

1. Provide fire proof sleeve assemblies utilizing UL rated sealant systems at all fire rated penetrations. For non-rated sleeve penetrations pack the annular space between the pipe and sleeve with fiberglass and/or mastic.
2. Sleeves shall provide a minimum ½" annular clearance around pipe.
3. Sheet metal: Fabricate from galvanized sheet metal; round tube closed with snaplock joint, welded spiral seams, or welded longitudinal joint. Fabricate from the following gauges: 3" and smaller, 20 gauge; 4" to 6", 16 gauge; over 6", 14 gauge.
4. Steel pipe: Fabricate from Schedule 40 galvanized steel pipe; remove burrs.
5. Iron pipe: Fabricate from cast iron or ductile-iron pipe; remove burrs.
6. Plastic and copper pipe: Fabricate from Schedule 80 PVC plastic pipe; remove burrs.
7. Sleeves through interior concrete walls and floors: Telescopic, submerged, adjustable sleeves by Adjust-to-Crete, AMI or Shamrock. Floor sleeves to extend a minimum of 1” above finished floor.
8. Through exterior walls and floor on grade: 150-pound class cast-iron pipe sleeve. Where waterproof membranes are used, provide membrane clamps. For insulated piping, sleeve diameter shall not be less than diameter of insulated pipe.

K. Sleeve Seals:

1. All sleeves shall be sealed to prevent intrusion of moisture, dust or insects.
2. Underground: For sleeves passing through exterior or foundation walls, provide mechanical link seal assembly.
3. Aboveground: For sleeves passing through walls or floors provide a non-toxic 3-hour rated fire resistant silicone foam sealant with a Flame Spread Rating of 20. Sealant to be tested and approved under UL 263, ASTM E119, and NFPA 251 Standards. All fire rated penetrations shall be sealed with approved UL System.
4. Local Approvals: All seals to be provided shall be in accordance with the regulations of all governing agencies of the city, county, and State Fire Marshal's Office.

L. Valve Boxes: Concrete body, cast iron cover with vandal resistant screws, extensions as required to extend full depth to valve. Valve box cover lettering shall correspond to the valve service, "Water", "Gas", "Fire", "Sewer", etc. Christy #G8 or equal.

~~2.19~~2.11 PIPE COATING

A. All underground steel and copper pipe fittings, and all above ground steel and copper pipe and fittings in corrosive air environments shall be covered with one of the following methods:

1. Twice Wrap 20 Mil. Scotch Wrap PVC No. 51, 50% overlap.
2. Prefabricated extruded plastic cover with joints sealed with two coats of 20 Mil. Scotch Wrap No. 51 or Pasco Wrap 20 mil weight.

B. Furnish corrugated stainless steel tubing (CSST) with factory-applied corrosion –resistant polyethylene jacket for use in corrosive atmosphere. Coating properties include the following:

1. Gastite corrugated stainless steel tube jacket shall be UV-Resistant polyethylene meeting the requirements of ASTM E84 for flame spread and smoke density.

~~2.20~~2.12 GAS CONNECTORS

A. General Areas: CSA rated, UL listed, braided stainless steel gas hose of size and capacity to meet appliance input requirements.

B. Food Service Equipment: CSA rated, UL listed, plastic coated braided stainless steel gas hose with quick disconnect, swivel fitting and coiled restraining device. Dormont #1675BPQS or approved equal.

C. Gas connectors for outdoor applications shall be listed for exterior use.

~~2.21~~2.13 EXPANSION COMPENSATORS

A. General: Pipe expansion, in general, is to be absorbed in bends, swing joints, expansion loops, and offsets. All piping mains, branches and runouts shall be installed to allow for free expansion and contraction without developing leaks or undue stressing of pipe. Stresses shall be within allowable limits of ASME B31.1 for pressure piping. Vertical piping for domestic hot water, chilled water, heating water, steam and steam condensate shall be provided with expansion joints at each floor. Expansion products to conform to the standards of the Expansion Joint Manufacturer's Association. Expansion joints shall not required packing. Installer shall select materials and pressure/temperature ratings to suit intended service. Select packless expansion joints to provide 150% absorption capacity of calculated maximum piping expansion between anchors. All connections shall have ends to match piping system application.

B. Expansion Compensators (Pipe Compression and Extension): Multiple stainless steel bellows and stainless steel liner with shroud and end fittings. Keflex #311 series or approved equal.

C. Flexible Expansion Joint/Seismic Connector for Steel Pipe: Stainless steel hose and braid, 180° return, CSA approved, and end fittings. Metraflex #Metraloop or approved equal.

D. Flexible Connection for Steel Pipe (Piping and Equipment Located Outside the Building): Stainless steel hose and braid, with threaded or flanged ends. Metraflex #SST or approved equal.

E. Flexible Connection for Copper Pipe: Bronze hose and braid, copper tube ends. Metraflex #BBS or approved equal.

1. For non-critical pump connections. Furnish with fluorelastomer tube and cover to ASTM D2000 Grade 1HK710. The body shall be reinforced with rectangular body rings and six bias plies of fiberglass/kevlar fabric rated 190#/26" vacuum at 250°F. Provide galvanized flat (not L shaped) back up rings and control rods to limit maximum axial extension. Garlock #206 EZ-FLO or approved equal.
2. Flexible Ball Pipe Joints: Provide flexible ball pipe joints where indicated for piping systems, with materials and pressure/temperature ratings selected by installer to suit intended service. Design joints for 360° rotation, and with minimum of 50° angular flexing movement for sizes ¼" to 4". Provide two composition gaskets for each joint. Barco or approved equal.

F. Pipe Alignment Guides: Provide pipe alignment guides on both sides of expansion joints, and elsewhere as indicated on drawings. Guide shall be of carbon steel construction with split guiding cylinder and integral anchor base and internal four finger two-piece spider. Cylinder wall thickness shall be equal to schedule 40 wall thickness of pipe being guided. Spider shall be capable of clamping directly to pipe and moving only in an axial direction while inside cylinder. Anchoring directly to building substrate. Metraflex #Style IV or equal.

G. Expansion Loops: Provide field fabricated pipe expansion loops as detailed on the drawings or in place of mechanical expansion joints.

PART 3 - EXECUTION

3.1 GENERAL

A. Workmanship shall be performed by licensed journeymen or master mechanics and shall result in an installation consistent with the best practices of trades.

B. Install work uniform, level and plumb, in relationship to lines of building. Do not install any diagonal, or otherwise irregular work unless so indicated on Drawings or approved by Architect.

3.2 MANUFACTURER'S DIRECTIONS

A. Follow manufacturers' directions and recommendations in all cases where the manufacturers of articles used on this Contract furnish directions covering points not shown on the Drawings or covered in these Specifications.

3.3 INSTALLATION

A. Coordinate the work between the various Plumbing Sections and with the work specified under other Divisions of the work or contracts toward rapid completion of the entire project. If any cooperative work must be altered due to lack of proper supervision or failure to make proper provisions in time, then the work hereunder shall include all expenses of such changes as are necessary in the work under other contracts, and such changes shall be directly supervised by and made to the satisfaction of the Engineer.

B. The cooperative work not included in the Plumbing Division related to the general construction work is as follows:

1. All formed concrete work.
2. Framed openings in masonry and other Architectural and Structural elements.
3. Wood grounds and nailing strips in masonry and concrete.
4. Sloping of floors to drains and floor sinks.
5. Sloping of roof-to-roof drains and overflow drains.

C. Inspect all material, equipment, and apparatus upon delivery and do not install any that may be subject to rejection as a result of damage or other defects. Provide tarps and visqueen cover to protect equipment and piping delivered to and stored at the site.

3.4 WORKING PRESSURES

A. All fittings, valves, pipe, specialties equipment shall be rated for the working pressure subjected in the installed locations.

B. Drawings indicate working pressure in each system. The rating of the equipment and material shall not be less than that of the system pressures.

C. Low pressure, 0.5 psig (14 inch Water Column) or less, Natural Gas Systems: Use 1/2 to 2-inch NPS: Gastite corrugated stainless steel tube and brass fittings.

D. Medium pressure, over 0.5 psig (14 inch Water Column) up to 5 psig, Natural Gas Systems: Use 1/2 to 2-inch NPS: Gastite corrugated stainless steel tube and brass fittings.

3.5 PIPES SIZES TO EQUIPMENT

A. General: Pipe sizes indicated shall be carried full size to equipment served. Any change of size to match equipment connection shall be made within one foot of equipment.

B. At temperature control valves with sizes smaller than connected lines, reduction shall be made immediately adjacent to valve.

3.6 PIPING INSTALLATION

A. General: Install pipes and pipe fittings in accordance with recognized industry practices which will achieve permanently leakproof piping systems, capable of performing each indicated service without piping failure. Install each run with minimum joints or couplings, but with adequate and accessible unions for disassembly and maintenance or replacement of valves and equipment. Reduce sizes (where indicated) by use of reducing fittings. Align piping accurately at connections, within 1/16" misalignment tolerance. Comply with ASME B31 Code for Pressure Piping.

B. Locate piping runs, except as otherwise indicated, vertically and horizontally (pitched to drain) and avoid diagonal runs wherever possible. Orient horizontal runs parallel with walls and column lines. Locate runs as shown or described by diagrams, details, and notations or, if not otherwise indicated, run piping in shortest route which does not obstruct space or block access for servicing building and its equipment. Hold piping close to walls, overhead construction, and other structural and permanent-enclosure elements of building. Limit clearance to 1/2" where furring is shown for enclosure or concealment of piping, but allow for insulation thickness, if any. Where possible, locate insulated piping for 1" clearance outside insulation. Whenever possible in finished and occupied spaces, conceal piping from view, by locating in column enclosures, in hollow wall construction, or above suspended ceilings. Do not encase horizontal runs in solid partitions, except as indicated.

C. Elevator Machine Rooms, Switchgear, Generator, Telecommunications, Telephone Rooms, and Electrical Equipment Spaces: Do not run piping through transformer vaults and other electrical or electronic equipment spaces and enclosures unless unavoidable. Install drip pan under piping that must be run through electrical spaces. Route drip pan drain piping to floor drain, floor sink or other approved receptor.

D. CSST tubing, fitting, and strike-protection are to be Gastite® and shall be installed per the current version of the Gastite® Design & Installation Guide and per **[Local Code]**. Gastite® supplied training shall be obtained by all installers prior to installation. The gas-piping system shall be pressure tested in accordance with all requirements of **[Local Code]**, ANSI LC-1 and the most current edition of the Gastite® Design and Installation Guide.

3.7 WELDING

A. Qualifications of Welders: Welders performing work under this Contract shall be certified and qualified in accordance with tests prescribed by the National Certified Welding Bureau (NCWB) or by other approved test procedures using methodology and procedures covered in the ASME Boiler and Pressure Vessel Code, Section IX, "Qualification Standard for Welding and Brazing Procedures, Welders, Brazers, and Welding and Brazing Operators". Installation shall conform to ANSI 31.1 "Power Piping".

1. Submit for approval the names, identification, and welder's assigned number, letter or symbol of welders assigned to this project.
2. The assigned identification symbol shall be used to identify the work of each welder and shall be indelibly stamped immediately upon completion of each weld.
3. Welders shall be tested and certified for all positions.
4. Submit identifying stenciled test coupons made by each operator.
5. Any or all welders may be required to retake welding certification tests without additional expense.
6. When so requested, a welder shall not be permitted to work as a welder on this project until he has been recertified in accordance with NCWB.
7. Recertification of the welder shall be made after the welder has taken and passed the required tests.
8. Where piping 1-1/2 inches and smaller is butt or socket welded, submit 3 samples of test welds for approval.

3.8 PIPING SYSTEM JOINTS

A. All piping shall be cut squarely, free of rough edges and reamed to full bore. Piping shall be mechanically cleaned prior to make-up of joints and fully inserted into fittings.

B. Provide joints of type indicated in each piping system.

C. Thread pipe in accordance with ANSI B2.1. Cut threads full and clean using sharp dies. Ream threaded ends to remove burrs and restore full inside diameter. Remove excess cutting oil from piping prior to assembly. Apply pipe joint compound, or pipe joint tape (Teflon) where recommended by pipe/fitting manufacturer, on male threads at each joint and tighten joint to leave not more than 3 threads exposed.

D. Solder copper tube and fitting joints with lead free nickel/silver bearing solder meeting ASTM. B-32, in accordance with IAPMO IS 3-93, ASTM B-828 and Copper Development Association recommended procedures. Joints shall be cleaned by other than chemical means prior to assembly. "Shock" cooling is prohibited. Fluxes shall be applied liberally to the outside of the pipe and the solder cup of the fitting. Fluxes shall be water soluble for copper and brass potable water applications, and shall meet CDA standard test method 1.0 and ASTM B813-91. Solder shall be applied until a full fillet is present around the joint. Solder and flux shall not be applied in such excessive quantities as to run down interior of pipe. Lead solder or corrosive flux shall not be present at the jobsite.

1. Manufacturers:
   a. Solder: JW Harris "Bridgit" or Englehard "Silvabrite 100".
   b. Flux: Laco "Flux-Rite 90", MW Dunton "Nokorode CDA Flux", Hercules "Fluid Action Solder Flux".

E. Braze copper tube and fitting socket or extrude joints (T-drill) with BCUP series filler metal without flux. Listed brazing flux shall be used for joining of copper tube to brass or bronze fittings and shall meet AWS FB3A or FB3C. Medical gas system brazing shall be as specified in Section 226313. "Shock" cooling is prohibited. A continuous fillet shall be visible around the completed joint. After cooling, flux residue shall be thoroughly removed

with warm water and a brush prior to testing. Do not use BCUP filler on copper alloys containing over 10% nickel.

F. Corrugated stainless steel tube (CSST) fittings joints: Gastite® mechanical tube fittings manufactured from ASTM B16 type 360 brass whose design incorporates a double wall flare for gas-tight seal with Jacket Lock™, mechanical capture of the jacket for enhanced tubing protection.

~~G. Alternative domestic water piping mechanical press type connections: Copper press fittings shall be made in accordance with the manufacturer's installation instructions. The tubing shall be fully inserted into the fitting and the tubing marked at the shoulder of the fitting. The fitting alignment shall be checked against the mark on the tubing to assure the tubing is fully engaged (inserted) in the fitting. The joints shall be pressed using the tool approved by the manufacturer. Copper press fittings shall conform to the material and sizing requirements of ASME B16.22. O-rings for copper press fittings shall be EPDM. Viega/Ridgid or approved equal.~~

~~H. Piping shall be capped during construction to prevent entry of foreign material.~~

~~I. Weld pipe joints in accordance with recognized industry practice and as follows:~~

~~1. Weld pipe joints only when ambient temperature is above 0°F.~~
~~2. Bevel pipe ends at a 37.5° angle where possible, smooth rough cuts, and clean to remove slag, metal particles, and dirt.~~
~~3. Use pipe clamps or tack-weld joints with 1" long welds, 4 welds for pipe sizes to 10", 8 welds for pipe sizes 12" to 20".~~
~~4. Build up welds with stringer-bead pass, followed by hot pass, followed by cover or filler pass. Eliminate valleys at center and at edges of each weld. Weld by procedures which will ensure elimination of unsound or unfused metal, cracks, oxidation, blow-holes, and non-metallic inclusions.~~
~~5. Do not weld out piping system imperfections by tack-welding procedures. Refabricate to comply with requirements.~~
~~6. At Installer's option, install forged branch connection fittings whenever branch pipe is indicated, or install regular T-fitting.~~

~~J. Flanged Joints: Match flanges within piping system, and at connections with valves and equipment. Clean flange faces and install gaskets. Tighten bolts to provide uniform compression of gaskets.~~

~~K. Cast-Iron Joints: Comply with coupling manufacturer's Cast Iron Soil Pipe Institute Standards and installation instructions.~~

3.9 VALVES

A. General: Except as otherwise indicated, comply with the following requirements:

1. Install valves where required for proper operation of piping and equipment, including valves in branch lines where necessary to isolate sections of piping. Locate valves so as to be accessible and so that separate support can be provided as necessary. <<Install valves on all services connected to kitchen equipment. >>
2. Install valves, except butterfly valves, with stems pointed up, in vertical position where possible, but in no case with stems pointed downward from horizontal plane without prior written approval. Install valve drains with hose-end adapter for each valve that must be installed with stem below horizontal plane.
3. Install butterfly valves with stems mounted horizontally.

4. All valves mounted higher than 7' above floor in mechanical rooms and where indicated shall be installed with stem horizontal and equipped with chain wheels and chains extending to 6' above floor.
5. <<Provide Seismic shut off valve on gas main downstream of meter.>>

B. Insulation: Where insulation is indicated, install extended-stem valves, arranged in proper manner to receive insulation.

C. Selection of Valve Ends (Pipe Connections): Except as otherwise indicated, select and install valves with the following ends of types of pipe/tube connections:

1. Copper Pipe, 2-1/2" and Smaller: Soldered-joint valves.
2. Steel Pipe, 2" and Smaller: Threaded joint valves.
3. Larger Pipe Sizes: One of the following, at installer's option:
   a. Flanged valves.
   b. Lug valves.

D. Non-Metallic Disc: Limit selection and installation of valves with non-metallic discs to locations indicated and where foreign material in piping system can be expected to prevent tight shutoff of metal seated valves.

E. Renewable Seats: Select and install valves with renewable seats, except where otherwise indicated.

F. Fluid Control: Except as otherwise indicated, install gate, ball, plug, circuit setter, globe, and butterfly valves to comply with ASME B31.9.

G. Swing Check Valves: Install in horizontal position with hinge pin horizontally perpendicular to center line of pipe. Install for proper direction of flow.

H. Wafer Check: Install between 2 flanges in horizontal or vertical position.

I. Ball Valve: Ball valve used on gas systems shall be UL listed, CSA approved for pressure of system, no exception.

J. Valve Adjustment: After piping systems have been tested and put into service, but before final testing, adjusting, and balancing, inspect each valve for possible leaks. Adjust or replace packing to stop leaks, replace valve if leak persists.

K. Valve Identification: Tag each valve in accordance with "Mechanical Identification" section.

L. Cleaning: Clean factory-finished surfaces. Repair marred or scratched surfaces with manufacturer's touch-up paint.

3.10 TEMPERATURE GAUGES

A. General: Install temperature gauges in vertical upright position, and tilted so as to be easily read by observer standing on floor without supplemental illumination. All gages to be installed with snubbers to absorb system shock.

B. Install in the following locations, and elsewhere as indicated:

1. At outlet of hot water heaters.
2. At inlet and outlet of boilers.

3.11 MECHANICAL SLEEVE SEALS

A. Loosely assemble rubber links around pipe with bolts and pressure plates located under each bolt head and nut. Push into sleeve and center. Tighten bolts until links have expanded to form a watertight seal.

B. Fire Barrier Penetration Seals: Fill entire opening with sealing compound in compliance approved and listed UL system number. Adhere to manufacturer's installation instructions.

3.12 SUPPORTS AND HANGERS (See ~~15~~22050)

~~3.13 EQUIPMENT RAILS AND PIPE PORTALS~~

~~A. Install per manufacturer's instructions.~~

~~B. Coordinate with other trades so units are installed when roofing is being installed.~~

~~C. Verify roof insulation thickness and adjust raise of cant to match.~~

~~3.14 VIBRATION CONTROL ISOLATORS~~

~~A. Comply with minimum static deflections recommended by ASHRAE, for selection and application of vibration isolation materials and units as indicated.~~

~~B. Manufacturer's Recommendations: Except as otherwise indicated, comply with manufacturer's recommendations for selection and application of vibration isolation materials and units.~~

~~C. Except as otherwise indicated, comply with manufacturer's instructions for installation and load application to vibration control materials and units. Adjust to ensure that units have equal deflection, do not bottom out under loading, and are not short-circuited by other contacts or bearing points. Remove space blocks and similar devices intended for temporary support during installation.~~

~~D. Install units between substrate and equipment as required for secure operation and to prevent displacement by normal forces, and as indicated.~~

~~E. Adjust leveling devices as required to distribute loading uniformly onto isolators. Shim units as required where substrate is not level.~~

~~F. Flexible Pipe Connectors: Install on equipment side of shutoff valves.~~

~~G. Upon completion of vibration control work, prepare report showing measured equipment deflections for each major item of equipment as indicated.~~

~~H. Clean each vibration control unit, and verify that each is working freely, and that there is no dirt or debris in immediate vicinity of unit that could possibly short-circuit unit isolation.~~

~~3.15~~3.13 EXPANSION LOOPS

A. Expansion Loops: Fabricate expansion loops as indicated, in locations indicated, and elsewhere as determined by installer for adequate expansion of installed piping system. Subject loop to cold spring which will absorb 50% of total expansion between hot and cold

conditions. Provide pipe anchors and pipe alignment guides as indicated, and elsewhere as determined by installer to properly anchor piping in relationship to expansion loops.

B. Expansion Compensation for Risers and Terminals: Install connection between piping mains and risers with at least five pipe fittings including tee in main. Install connections between piping risers and terminal units with at least four pipe fittings including tee in riser.

~~3.16 EXPANSION COMPENSATORS~~

~~A. Install as noted on plans. Where plans do not indicate spacing of guides or other pertinent information, install per manufacturer's recommendations.~~

~~3.17 EXCAVATION AND BACKFILL~~

~~A. Underground piping shall be installed in stable, open trench work. Trench excavations shall be a minimum of 16" wide, true to line and grade. Contractor shall exercise all due shoring and safety procedures. No stones larger than 1" may be present in the trench to a minimum depth of 4" below the trench bottom. The trench shall be free of job site debris, and free of corrosive media. Pipe crown shall be not less than 24" below the finished ground surface for metallic pipe, and 30" for non-metallic pipe, unless otherwise indicated on the drawings or directed by the Architect. Trenches shall be kept free of excess moisture, and shall be kept open for only a short a time as necessary for installation, testing and inspection. Dispose of surplus excavation and seepage water as directed by the Architect.~~

~~B. Piping shall be properly bedded and backfilled over stable trench bottom to a level of at least 12" above the pipe crown with thin layers of unwashed sand, dampened but not puddle, and free of organic or corrosive materials and excessive moisture. Backfill shall be placed in thin layers not to exceed 6" and tamped by mechanical tampers to a minimum 90% Modified Proctor Density, in accordance with ASTM D-1557-58T. trenches shall be backfilled to a minimum depth of 36" prior to being wheel loaded. Replace to their original condition all turf, plants, concrete, asphalt, or other improvements which constitute landscaping, traffic areas or other improved areas which become disturbed by excavation. In graded and undeveloped areas, in addition to procedures specified above, backfill trenches with crown 8" above the surrounding surface.~~

~~C. Excavated and backfill in soils of unstable nature shall be provided as directed by Architect.~~

~~3.18~~3.14 PIPE INSPECTIONS

A. It is the intent of the Contract Documents that systems be inspected at completion of each phase while under tests required for administrative authorities, and prior to concealment, i.e. "Rough-in" "top-out" and final.

B. Inspection – Below Grade: All piping installed below grade shall be inspected prior to burial by the Architect, the Owner's Representative or the Engineer. Contractor must notify Architect no less than 24 working hours prior to inspection time. Should the piping be buried prior to inspection the contractor may be requested to uncover the piping at no delay to the project and at no additional cost to the Owner.

C. Inspection – Above Grade: All piping installed above grade shall be made available for inspection upon completion and prior to finish of walls and ceilings. Notify the Architect, the Owner's Representative or the Engineer. Contractor must notify Architect no less than 24 working hours prior to the desired inspection time. Should the piping be hidden within the

structure prior to inspection the contractor may be requested to uncover the piping at no delay to the project and at no additional cost to the Owner.

~~3.19~~3.15 CLEANING, FLUSHING, DISINFECTING

A. General: Clean exterior surfaces of installed piping systems of superfluous materials, and prepare for application of specified coatings (if any).

B. Flush out piping systems with clean water before proceeding with required tests. Inspect each run of each system for completion of joints, supports, and accessory items.

C. Inspect pressure piping in accordance with procedures of ASME B31.

D. Disinfect water mains and water service piping in accordance with Section 220501.

~~3.20~~3.16 TESTING

A. Provide all tests specified hereinafter and as otherwise required. Provide all test equipment, including test pumps, gauges, instruments, and other equipment required. Test all rotational equipment for proper direction of rotation. Upon completion of testing, certify to the Architect, in writing, that the specified tests have been performed and that the installation complies with the specified requirements and provide a report of the test observations signed by qualified inspector.

B. Piping: Remove from the system, during testing, all equipment which would be damaged by test pressure. Replace removed equipment when testing has been accomplished. The system may be tested in sections as the work progresses; however, any previously tested portion shall become a part of any latter test of a composite system. Correct leaks by remaking joints with new material.

C. Test time will be accrued only while full test pressure is on the system, unless indicated otherwise. “Tolerance” shall be no pressure drop, except that due to temperature change in a 24-hour period. Inspect and test all work prior to burying or concealing. Test pressure shall be one and one-half times the system operating pressure or the listed test pressure below, whichever is greater:

System	Test Medium	Test Pressure	Tolerance-Test Period
Domestic Water	Water	150 psig	None – 8 hours
Soil and Waste	Water	10 ft head, 5 psi	No leaks – 8 hours
Vent	Water	Top of Vent Terminal	No leaks – 8 hours
Storm	Water	Top of Roof Drain	No leaks – 8 hours
Automatic Fire	Water	200 psig	None – 8 hours
Natural Gas/Propane	Air or Nitrogen	100 psig	None – 24 hours
~~Compressed Air~~	~~Air~~	~~200 psig~~	~~None – 8 hours~~
~~Medical Gases/Vacuum~~	~~Nitrogen~~	~~1.5 times operating pressure~~	~~No leaks – per NFPA – 24 hours min.~~

D. Final Drainage, Waste and Vent Test: Upon project closeout, Contractor shall perform and certify that the DWV system has passed the following test:

1. After all plumbing fixtures have been installed and their traps filled with water, all vent terminals and building drains shall be closed and a U-tube water manometer shall be inserted into the trap of water closet and an air compressor testing apparatus shall be attached to any suitable opening. An air pressure of 1" water column as indicated on the manometer shall be introduced into the system. The pressure shall hold constant for a period of 15 minutes without the introduction of additional air. Leaks revealed during this test may be located by smoke test of other recognition methods.

E. Valves: Test all valve bonnets for tightness. Test operate all valves at least once from closed-to-open-to-closed position while valve is under test pressure. Test all automatic valves, including solenoid valves, and temperature and pressure relief valves, safety valves, and temperature and pressure relief valves not less than three (3) times.

F. Piping Specialties: Test all thermometers, pressure gauges, and water meters for accurate indication; automatic water feeders, air vents, trap primers, and vacuum breakers for proper performance. Test all air vent points to ensure that all air has been vented.

G. Backflow Preventers: Each testable backflow prevention device shall be tested and approved by certified testers after installation. Submit test results.

END OF SECTION

SECTION 22 40 00 - PLUMBING FIXTURES

PART 1 - GENERAL

1.1 APPLICABLE REQUIREMENTS

A. All work to be furnished and installed under this section shall comply with all the requirements of General Conditions, Supplemental Conditions, Division 01 - General Requirements, and Section 220500 - Basic Materials and Methods, and other Sections in Division 22 specified herein.

1.2 SCOPE

A. All work to be furnished and installed under this section shall include, but not necessarily be limited to, the installation of plumbing fixtures and trim.

1.3 RELATED WORK IN OTHER SECTIONS

A. Section 220500: Basic Materials and Methods

B. Section 220501: Plumbing

~~C. Section 221123: Plumbing Equipment~~

C. Section 01 81 13: Sustainable Design Requirements

1.4 SUBMITTALS

A. Prior to construction submit for approval all materials and equipment in accordance with Division 01. Submit manufacturer's data, colors, installation instructions, and maintenance and operating instructions for all components of this section including, but not limited to, the following:

1. Plumbing fixtures.
2. Piping specialties.
3. Toilets.
4. Urinals.
5. Lavatories.
6. Sinks.
~~7. Showers or tubs.~~
~~8.~~7. Drinking fountains.

B. Shop Drawings: Submit rough-in drawings. Detail dimensions, rough-in requirements, required clearances, and methods of assembly of components and anchorages. Coordinate requirements with Architectural Woodwork shop drawings specified in Division 06 for fixtures installed in countertops and cabinets. Furnish templates for use in woodwork shop.

C. Samples: Submit samples of any piece of equipment requested by Architect for review and approval.

D. Wiring Diagrams: Submit manufacturer's electrical requirements and wiring diagrams for power supply to units. Clearly differentiate between portions of wiring that are factory installed and field installed portions.

E. LEED certification data as specified in Division 1, Section 01 81 13, "Sustainable Design Requirements", for the following LEED credits:

1. Prerequisite WE 1, Water Use Reduction
2. Credit WE 3, Water Use Reduction

1.5 CODES AND STANDARDS

~~A. Uniform Plumbing Code (UPC) with State Amendments.~~

~~<<<<<EDIT FOR APPROPRIATE STATE>>>>>~~

~~B. State of Oregon Plumbing Specialty Code – SOPSC~~

~~C. All fixtures and faucets must meet all requirements of the State of Oregon Structural Specialty Code – SOSSC.~~

~~D.~~A. ~~All fixtures and accessories must be approved for use by the State of <<Oregon>>.~~

~~E.~~B. All fixtures and faucets must meet all requirements of Americans with Disabilities Act (ADA).

~~F.~~C. State Energy Code

~~G.~~D. ARI Standard 1010: "Drinking Fountains and Self-Contained Mechanically Refrigerated Drinking Water Coolers."

1.6 DELIVERY, STORAGE, AND HANDLING

A. Deliver units to the site in containers with manufacturer's stamp or label affixed.

B. Store and protect products against dirt, water, chemical, and mechanical damage. Do not install damaged products. Remove damaged products from project site.

1.7 MAINTENANCE

A. Extra Stock:

1. Furnish special wrenches and other devices necessary for servicing plumbing fixtures, flush valves, and trim to Owner with receipt in a quantity of one device for each 10 fixtures.
2. Furnish faucet repair kits complete with all necessary washers, springs, pins, retainers, packings, o-rings, sleeves, and seats in a quantity of 1 kit for each 10 faucets.

PART 2 - PRODUCTS (see plumbing schedule)

2.1 GENERAL

A. Provide fixtures as specified. Fixtures in any secure or public areas shall be vandal proofed.

B. Architect/Engineer shall review and approve any substitution requested by Contractor prior to bid submittal.

C. Provide fixture as specified, acceptable manufacturers:

1. Vitreous China or Cast Iron Fixtures: American Standard, Eljer, Zurn, Toto or Kohler.

2. Stainless Steel Sinks: Elkay or Just
   a. All stainless steel is 18 gauge, type 304 unless otherwise specified.
3. Drinking Fountains: Elkay or Haws.
4. Terrazzo Service Sinks: Florestone or Stern Williams.
5. ~~Showers enclosures: Lasco, Fiber Fab, Aquaglass and Aqua Bath.~~

D. Provide faucet as specified. Acceptable manufacturers: Chicago Faucets, Zurn, Symmons, T and S or as indicated.

~~E. <<Provide a thermostatic mixing valve conforming to ASSE 1070 for all public lavatories and tub only fillers.>>~~

~~F.~~E. Provide flush valve as specified. Acceptable manufacturers: Sloan, Hydrotek or Zurn.

~~G.~~F. Provide commercial grade toilet seat as specified. Acceptable manufacturers: Beneke, Bemis, Church or Olsonite.

~~H.~~G. Provide heavy-duty cast iron commercial grade carrier as specified. Provide compact carriers where space is limited. Acceptable manufacturers: Ancon, Jay R. Smith, Wade or Zurn. No plastic parts on foundry items.

1. Wall hung water closet: J.R. Smith figs: 0210L/RY-M12 <<- M40>>, 0210DY-M12, 0240L/RY-M12, 0240DY-M12, 0410R/LY-M12 and 0410DY-M12.
2. Wall hung urinal: J.R. Smith fig: 0634-M12 or Zurn Z-1221-58.
3. Wall hung lavatory: J.R. Smith fig: 0700(D) –M31 concealed arm carrier.

~~I.~~H. Provide heavy duty commercial grade 17-gauge P-Trap and supplies with stops as specified. Provide heavy duty commercial grade lavatory supplies. Provide supplies meeting AB1953 no lead requirements. Supplies shall be ½"x 3/8" x 12" ground joint flexible riser with loose key angle stop with chrome plates I.P.S. brass nipple. Sink supplies shall be ½" x 12" ground joint flexible riser with loose-key angle stop with chrome plated I.P.S. brass nipple. Provide bell type escutcheons for both P-trap and supplies. Acceptable manufacturers: Zurn, Brasscraft, Chicago, or McGuire.

1. P-trap - Lav: McGuire C8902-DF or Zurn Z-8701.
2. P-trap - Sink: McGuire C8912-DF or ZurnZ-8702.
3. Supply for Lavatory: McGuire LFH2165LK or Zurn ZH88-XL-LK.
4. Offset supply for barrier free lavatory: McGuire 158 WC.
5. Supply for Sink: McGuire LFH2167LK or Zurn ZH8803-XL-LR.
6. Supply for Water Closet: McGuire H2169LK or Zurn ZH-8807-CR.
7. Escutcheons: McGuire WE00D Series, wrought brass, bell type.
8. Lavatory grid strainer: McGuire 155A or Zurn Z-8743.
9. Barrier-free lavatory offset grid strainer: McGuire 155WC or Zurn 8746.
10. Sink Strainer: Elkay LK-18B.

~~<<<USE THE FOLLOWING FOR RESIDENCES.>>>~~

~~J. Provide standard grade P-Traps and supplies with stops as specified in residences. Provide supplies meeting AB1953 no lead requirements. Lavatory supplies shall be 1/2" x 3/8" x 12" ground joint flexible riser with round wheel handles and chrome plated I.P.S. brass nipple. Sink supplies shall be 1/2" x 12" ground joint flexible riser with round wheel handle angle stop with chrome plated I.P.S. brass nipple. Provide bell type chrome plated escutcheon for traps and supplies. Acceptable manufacturers: McGuire, Zurn, Chicago or Brass Craft.~~

~~1. P-Trap Lavatory: McGuire 8901-C or Zurn 8706.~~
~~2. P-Trap Sink: McGuire 8892-C or Zurn 8708.~~
~~3. Supply Lavatory: McGuire LF2165 or Zurn ZH8801-XL-LR.~~
~~4. Supply Sink: McGuire LF2167 or Zurn ZH8803-XL-LR.~~
~~5. Supply Water Closet: McGuire 2169 or Zurn Z8807CR.~~
~~6. Offset Supply for ADA Lavatory: McGuire 158W or Zurn Z-8855-WL.~~

7. ~~Offset Trap Arm for ADA Lavatory: McGuire 155WC or Zurn Z-8746.~~
8. ~~Offset Trap Arm for ADA Sink: McGuire 1151AWC or Zurn Z-8749.~~
9. ~~Escutcheons: McGuire chrome plated WE125TR, WE150, WE125D and WE150D or Zurn.~~

~~K.~~I. Insulation: provide white molded closed cell vinyl pre-fab insulation on P-Trap and on both hot and cold water supply for barrier free lavatories and sinks. Acceptable manufacturers: Plumberex, True-Bro, and Zurn. Bag type insulators are not acceptable.

~~2.2 FIXTURE LISTING~~

~~A. WC-1 Water Closet:~~

1. ~~Fixture: Kohler K-4330 "Kingston" or American Standard 2257.103 "Afwall EL1.6"wall mounted vitreous china siphon jet toilet 1-1/2" top spud, bolt caps, 1.6 gallon water flush.~~
2. ~~Seat: Bemis 1655-SSC solid white plastic elongated open front seat less cover, self-sustaining stainless steel check hinges.~~
3. ~~Flush Valve: Sloan Royal 111 or Zurn Z-600AV-WS1. <<Sloan WES-111 or Zurn Z6000AV-WS1-DF.>>~~
4. ~~Mounting Height: 15" floor to bowl rim.~~

~~B. WC-2 Water Closet - Barrier Free:~~

1. ~~Fixture: Kohler K-4330 "Kingston" or American Standard 2257.103 "Afwall EL 1.6" wall mounted vitreous china siphon jet toilet 1-1/2" top spud, bolt caps, 1.6 gallon water flush.~~
2. ~~Seat: Bemis 1655-SSC solid white plastic elongated open front seat less cover, self-sustaining stainless steel check hinges.~~
3. ~~Flush Valve: <Sloan 8111-MC flush valve with sweat kit, battery operated or Zurn ZER-6003-AV.> <Sloan Royal 111 or Zurn 6003-WS-1.> <<Sloan WES-111 or Zurn Z6000AV-WS1-DF.>>~~
4. ~~Mounting Height: 18" floor to top of seat.~~

~~C. WC-3 Water Closet - HET:~~

1. ~~Fixture: Toto CT708E wall hung, white vitreous china, elongated bowl, high efficiency siphon jet toilet.~~
2. ~~Seat: Toto SC534 solid white plastic, elongated open front seat, less cover.~~
3. ~~Flush Valve: Toto TMT1LN-CP-12, 1.28 gallon piston valve action. <<TET1LN32-CP electronic flush valve.>>~~
4. ~~Mounting Height: 15" floor to bowl rim.~~

~~D. WC-4 Water Closet – HET – ADA:~~

1. ~~Fixture: Toto CT708E wall hung, white vitreous china, elongated bowl, high efficiency siphon jet toilet.~~
2. ~~Seat: Toto SC534 solid white plastic, elongated open front seat, less cover.~~
3. ~~Flush Valve: Toto TMT1LN-CP-12, 1.28 gallon piston valve action. <<TET1LN32-CP electronic flush valve.>>~~
4. ~~Mounting Height: 18" floor to top of seat.~~

~~E. WC-5 Water Closet – HET:~~

1. ~~Fixture: Toto CT705EN floor mount, white vitreous china, elongated bowl, high efficiency siphon jet toilet.~~
2. ~~Seat: Toto SC534 solid white plastic, elongated open front seat, less cover.~~
3. ~~Flush Valve: Toto TMT1LN-CP-12, 1.28 gallon piston valve action. <<TET1LN32-CP electronic flush valve.>>~~

~~F. WC-6 Water Closet – HET – ADA:~~

1. ~~Fixture: Toto CT705ELN floor mount, white vitreous china, elongated bowl, high efficiency siphon jet toilet.~~
2. ~~Seat: Toto SC534 solid white plastic, elongated open front seat, less cover.~~
3. ~~Flush Valve: Toto TMT1LN-CP-12, 1.28 gallon piston valve action. <<TET1LN32-CP electronic flush valve.>>~~

~~G. WC-7 Water Closet – Dual Flush:~~

1. ~~Fixture: Z5610 wall mount vitreous china siphon jet toilet 1-1/2" top spud, bolt caps, 1.6 gallon water flush.~~
2. ~~Seat : Zurn Z5955SS-EL or Bemis.~~
3. ~~Flush Valve: Zurn Z6000AV-WS1-DF dual flush valve.~~
4. ~~<<Paired Performance: Fixture and flush valve must be from the same manufacturer.>>~~

~~H. WC-8 Water Closet – Dual Flush – Barrier Free:~~

1. ~~Fixture: Z5610 wall mount vitreous china siphon jet toilet 1-1/2" top spud, bolt caps, 1.6 gallon water flush.~~
2. ~~Seat : Zurn Z5955SS-EL or Bemis.~~
3. ~~Flush Valve: Zurn Z6000AV-WS1-DF dual flush valve.~~
4. ~~<<Paired Performance: Fixture and flush valve must be from the same manufacturer.>>~~

~~I. WC-9 Water Closet:~~

1. ~~Fixture: Kohler K-4350 "Wellcomme " or American Standard 2234.015 "Madera" floor set vitreous china siphon jet toilet 1-1/2" top spud, bolt caps, 1.6 gallon water flush.~~
2. ~~Seat: Bemis 1655-SSC solid white plastic elongated open front seat less cover, self-sustaining stainless steel check hinges.~~
3. ~~Flush Valve: Sloan Royal 111 or Zurn Z-6000-AV-WS1.~~

~~J. WC-10 Water Closet - Barrier Free:~~

1. ~~Fixture: Kohler K-4302 "Highcrest" or American Standard 2305.100 "Madera" floor set vitreous china siphon jet toilet 1-1/2" top spud, bolt caps, 1.6 gallon water flush.~~
2. ~~Seat: Bemis 1655-SSC solid white plastic elongated open front seat less cover, stainless steel check hinges.~~
3. ~~Flush Valve: <Sloan Royal 8111-MC with sweat kit, battery operated or Zurn ZER-6003-AV-WS1.> <Sloan Royal 111 or Z-6003-WS1.>~~

~~K. WC-11 Water Closet – Dual Flush:~~

1. ~~Fixture: Z5660 floor set vitreous china siphon jet toilet 1-1/2" top spud, bolt caps, 1.6 gallon water flush.~~
2. ~~Seat: Zurn Z5955SS-EL or Bemis.~~
3. ~~Flush Valve: Zurn Z6000AV-WS1-DF dual flush valve.~~
4. ~~<<Paired Performance: Fixture and flush valve must be from the same manufacturer.>>~~

~~L. WC-12 Water Closet – Dual Flush – Barrier Free:~~

1. ~~Fixture: Z5660 floor set vitreous china siphon jet toilet 1-1/2" top spud, bolt caps, 1.6 gallon water flush.~~
2. ~~Seat: Zurn Z5955SS-EL or Bemis.~~
3. ~~Flush Valve: Zurn Z6000AV-WS1-DF dual flush valve.~~
4. ~~<<Paired Performance: Fixture and flush valve must be from the same manufacturer.>>~~

~~M. WC-13 Water Closet:~~

1. ~~Fixture: Kohler K-3505 "Wellworth Pressure Lite" floor set vitreous china siphon jet flush tank toilet, bolt caps, 1.4 gallon water flush. Provide tank lock.~~

2. ~~Seat: Bemis 1655-SSC solid white plastic elongated open front seat less cover, self-sustaining stainless steel check hinges.~~

N. ~~WC-14 Water Closet - Barrier Free:~~

1. ~~Fixture: Kohler K-3493-T(R) "Highline Pressure Lite" floor set vitreous china siphon jet flush tank toilet, bolt caps, 1.4 gallon water flush. Provide tank lock. Provide with trip lever on open side of stall per ADA.~~
2. ~~Seat: Bemis 1655-SSC solid white plastic elongated open front seat less cover, self-sustaining stainless steel check hinges.~~

O. ~~WC-15 Water Closet – Dual Flush Type~~

1. ~~Fixture: Caroma "Caravelle 270" white two piece elongated vitreous china fixture with dual flush two button operation. Toilet to be capable of flushing with 0.8 GPF and 1.6 GPF. Provide with matching seat.~~

P. ~~WC-16 Water Closet – Dual Flush ADA:~~

1. ~~Fixture: Caroma "Caravelle 270 Easy Height" elongated white two piece vitreous china tank type fixture with dual flush raised two button operation. Toilet to be capable of flushing with 0.8 GPF and 1.6 GPF. Provide with matching seat.~~

Q. ~~UR-1 Urinal:~~

1. ~~Fixture: Kohler K-5016-ET "Dexter" or American Standard 6541.132 "Allbrook" wall mounted vitreous china siphon jet urinal, 3/4" top spud, 2" outlet, wall hanger, 1.0 gallon water flush.~~
2. ~~Flush Valve: <Sloan 8186-1-MC flush valve with sweat kit, battery operated.> <Sloan Royal 186-1>.~~
3. ~~Mounting Height: 24" floor to lip.~~

R. ~~UR-2 Urinal - Barrier Free:~~

1. ~~Fixture: Kohler K-5016-ET "Dexter" or American Standard 6541.132 "Allbrook" wall mounted vitreous china siphon jet urinal, 3/4" top spud, 2" outlet, wall hanger, 1.0 gallon water flush.~~
2. ~~Flush Valve: <Sloan 81861-MC-BD with sweat kit. <Sloan Royal 186-1>~~
3. ~~Mounting Height: 17" floor to lip.~~

S. ~~UR-3 Urinal - Low flow:~~

1. ~~Fixture: Kohler K-4960-ET "Bardon" wall hung vitreous china, ¾" top spud, 2" outlet 0.5 gallon flush.~~
2. ~~Flush Valve: Sloan 8186-0.5-MC flush valve with sweat kit, battery operated. <<Sloan 186-0.5. >>~~
3. ~~Mounting Height: 24" floor to lip.~~

T. ~~UR-4 Urinal - Low flow - Barrier Free:~~

1. ~~Fixture: Kohler K-4960-ET "Bardon" wall hung vitreous china, ¾" top spud, 2" outlet 0.5 gallon flush.~~
2. ~~Flush Valve: Sloan 8186-0.5-MC flush valve with sweat kit, battery operated. <<Sloan 186-0.5. >>~~
3. ~~Mounting Height: 17" floor to lip.~~

~~<<<VERIFY THE FOLLOWING LOW/NO FLOW URINALS ARE ACCEPTABLE FOR USE BY THE AHJ.>>>~~

U. ~~UR-5 Urinal – Ultra low flow:~~

1. ~~Fixture: Zurn Z5755 ultra water saving washdown urinal. <<Caroma "Cube^3 Ultra".>>~~
2. ~~Flush Valve: Zurn ZEG-6003-AV sensor operated valve with 1/8 GPF.~~
3. ~~Mounting Height: 24" floor to lip.~~

~~V. UR-6 Urinal – Ultra low flow, ADA:~~

~~1. Fixture: Zurn Z5755 ultra water saving washdown urinal. <<Caroma "Cube^3 Ultra".>>~~
~~2. Flush Valve: Zurn ZEG-6003-AV sensor operated valve with 1/8 GPF.~~
~~3. Mounting Height: 17" floor to lip.~~

~~W. UR-7 Urinal – Waterless:~~

~~1. Fixture: Kohler K-4918 "Steward" or Waterless Model 2101 white vitreous china fixture. Provide with factory hangers.~~
~~2. Traps: Provide 4 additional traps for each urinal installed.~~
~~3. Sealant: "Blue Seal" or Kohler trap liquid. Provide additional gallon of sealant for each urinal installed.~~
~~4. Mounting Height: 24" floor to lip.~~

~~X. UR-8 Urinal, Waterless, ADA:~~

~~1. Fixture: Kohler K-4918 "Steward" or Waterless Model 2004 white vitreous china fixture. Provide with factory hangers.~~
~~2. Traps: Provide 4 additional traps for each urinal installed.~~
~~3. Sealant: "Blue Seal" or Kohler trap liquid. Provide additional gallon of sealant for each urinal installed.~~

~~Y. L-1 Lavatory - Barrier Free:~~

~~1. Fixture: Kohler K-2905-4 "Farmington," or American Standard 3420.403 "Affinity", 19" x 16" cast iron countertop oval lavatory.~~
~~2. Faucet: Chicago Faucet 2200-4CP <<Chicago Faucet 3300-CP>> with grid strainer and <<Omni L-400-0.5 VR low flow outlet set @ 0.50 G.P.M.>> <<Omni A-400-1.5 laminar flow Outlet set for 1.5 G.P.M.>>~~
~~3. Mounting Height: Refer to architectural elevations for details.~~

~~Z. L-2 Lavatory - Barrier Free:~~

~~1. Fixture: Kohler K-2005 "Kingston" or American Standard 0355.012 "Lucerne" 20" x 18" wall hung vitreous china lavatory drilled for concealed arm carrier.~~
~~2. Faucet: Chicago Faucet 2200-4CP <<Chicago Faucet 3300-CP>> with grid strainer, and <<Omni L-400-0.5 VR low flow outlet set @ 0.50 G.P.M.>> <<Omni A-400-1.5 laminar flow Outlet set for 1.5 G.P.M.>>~~
~~3. Mounting Height: 34" floor to bowl ledge, maximum.~~

~~AA. HS-1 Sink, Hand Wash:~~

~~1. Fixture: Elkay ELV-2219 Wall hung stainless steel sink with concealed arm carrier.~~
~~2. Faucet: Chicago Faucet 895-317 with gooseneck faucet, wrist blade handles, and <<Omni L-400-0.5 VR low flow outlet set for 0.50 gpm>> <<Omni A-400-1.5 laminar flow outlet set for 1.5 G.P.M.>>~~
~~3. Mounting Height: 31" floor to bowl ledge, maximum.~~

~~BB. S-1 Sink:~~

~~1. Fixture: Elkay <#DLR-2222-10, 22" x 22"x10"> <#LRAD-2222-6 ½, 22"x22"x6 ½", A.D.A. compliant> 18 gauge stainless steel countertop single bowl sink.~~
~~2. Faucet: Chicago Faucet 786, spread fitting with blade handles, rigid gooseneck spout, and Omni A-400-2.00 VR laminar flow set at 2.0 gpm.~~
~~3. Supplies: ½" flexible supplies with stops and escutcheon plate. Provide 1/4" flexible supply with stop for coffee maker.~~
~~4. Mounting Height: Refer to architectural details.~~

~~CC. S-2 Sink:~~

1. ~~Fixture: <Elkay DLR-3322-10 "Lustertone" 33" x 22" x 10"><LRAD-3322-6 ½."Lustertone" 33"x22"x6-1/2",A.D.A. compliant> self-rimming countertop 18 gauge stainless steel double bowl sink.~~
2. ~~Faucet: Chicago Faucet 2300-8 Single lever faucet with Omni A-400-2.00 VR laminar flow set @ 2.0 G.P.M.~~
3. ~~Hot Water Machine: Elkay #LKH-180 or ISE H-778, 750 Watts, 120 Volts, three prong plug and cord.~~
4. ~~Drain: Elkay, standard duo strainers with 4" tailpiece, 2 required.~~
5. ~~<<Garbage Disposer: ISE Badger 5XP, 3/4 HP, 120 Volts, three prong plug and cord.>>~~
6. ~~Continuous Waste Arm: Brass combination drain outlet for double compartment sinks.~~
7. ~~Supplies: ½" flexible supplies with stops and escutcheon plate. <<Provide 1/4" flexible supply with stop for coffee maker.>>~~
8. ~~Mounting Height: Refer to architectural elevation details.~~

~~DD. S-3 Sink:~~

1. ~~Fixture: Elkay DLR-1722-10, 17"x 22"x10" <LRAD-1722-6-1/2, 17"x22"x6-1/2", A.D.A. compliant> 18 gauge stainless steel countertop single bowl sink.~~
2. ~~Faucet: Symmons S-26-IPS, single lever post type pull out faucet complete with integral vacuum breaker and OMNI A-400-2.00 VR. <<Chicago Faucet 2300-8 Single lever faucet with Omni A-400-2.00VR.>>~~
3. ~~Hot Water Machine: Elkay #LKH-180 or ISE H-778, 750 Watts, 120 Volts, three prong plug and cord.~~
4. ~~Garbage Disposer: ISE Badger 5XP, 3/4 HP, 120 Volts, three prong plug and cord.~~
5. ~~Sink Supplies: 1/2" flexible supplies with loose key stops. <<Provide 1/4" flexible supply with stop for coffee maker and Insta-Hot.>>~~
6. ~~Mounting Height: Refer to architectural details.~~

~~EE. S-4 Sink:~~

1. ~~Fixture: Elkay LRAD-1517 - 6-1/2", 15"x 17"x 6-1/2", A.D.A. compliant, 18-gauge single bowl stainless steel sink.~~
2. ~~Faucet: Chicago Faucet 682-8-123CP, Standard spout battery powered electronic faucet with temperature mixing valve. <<Chicago Faucet 786 spread fitting with blade handles and Omni A-400-2.00VR laminar flow.>>~~
3. ~~Mounting Height: Refer to architectural elevation details.~~

~~FF. MS-1 Sink - Mop:~~

1. ~~Fixture: Stern Williams CRS-2200BP, "Crescent" 28" x 28" x 12" terrazzo floor set receptor; cast brass drain with stainless steel strainer and tailpiece; 20 gauge stainless steel rim guard, splash guard.~~
2. ~~Faucet: Chicago Faucet 897-RCF; wall mounted combination fitting with vacuum breaker, wall brace, threaded hose outlet and integral stops, rough chrome finish, flow control set to 2 gpm (Omni A-810-2.0VR).~~
3. ~~Sealant: Caulk edges of basin with silicone sealant.~~

~~GG. MR-2 Sink - Service:~~

1. ~~Fixture: Stern Williams #HL-1900BP, 32" x 32" x 12" terrazzo floor set receptor, cast brass drain, stainless steel strainer and tailpiece and 20 gauge steel rim guard, splash guard.~~
2. ~~Faucet: Chicago Faucet 897-RCF; wall mounted combination fitting with vacuum breaker, wall brace, threaded hose outlet and integral stops, rough brass finish, Omni A-810-2.00 VR set at 2.0 gpm.~~
3. ~~Sealant: Caulk edges of basin with silicone sealant.~~

~~HH. SS-1 Sink - Service:~~

1. ~~Fixture: Kohler K-6716 24" x 20" wall and floor supported enameled cast iron service sink, rim guard and wall hanger plate.~~
2. ~~Faucet: Chicago Faucet 897-RCF service sink fitting, vacuum breaker, threaded spout and lever handles, rough chrome finish, flow control set to 2 gpm (Omni A-810-2.0VR).~~
3. ~~Trap: Kohler K-6673trap standard with strainer cleanout and anchor plate.~~
4. ~~Carrier: J.R. Smith 871.~~
5. ~~Mounting Height: 28" floor to ledge.~~

~~II. SH-1 Shower:~~

1. ~~Fixture: One piece heavy duty seamless fiberglass construction with anti slip floor. <<Provide with top>> Provide shower curtain and rod. Fiber Fab #36.~~
2. ~~Faucet: Symmons 1-100 "Safetymix" pressure balancing with integral stops pressure balancing with integral stops and 2.0 gpm shower head. <<1.5 GPM Zurn X 7000S-9 shower head.>>~~
3. ~~Drain:~~

~~JJ. SH-2 Shower ADA:~~

1. ~~Fixture: One piece heavy duty seamless fiberglass construction with fold down seat and grab bars. Fiber Fab #38 H1 <with Low Profile bottom>. Provide with shower curtain and rod.~~
2. ~~Faucet: Symmons 1-117-FS-X with 60" flexible hose, integral stops, 2 gpm shower head and diverter valve.~~
3. ~~Drain: Fiber Fab.~~

~~KK. SH-3 Shower:~~

1. ~~Waterproof membrane: Noble Chloraloy 240, non-plasticized 40 mil chlorinated polyethylene synthetic elastomer sheet membrane, ASTM04068-81, IAPMO No. 1007.~~
2. ~~Faucet: Symmons 1-100 "Safetymix" pressure balancing with integral stops and 2.0gpm shower head. <<1.5 GPM Zurn X 7000S-9 shower head.>>~~
3. ~~Drain: J.R. Smith 2005YA or Zurn.~~

~~LL. SH-4 Shower ADA:~~

1. ~~Waterproof membrane: Noble Chloraloy 240, non-plasticized 40 mil chlorinated polyethylene synthetic elastomer sheet membrane, ASTM 04068-81, IAPMO No. 1007.~~
2. ~~Faucet: Symmons 1-117-FS-X with 60" flexible hose, integral stops, 2gpm shower head and diverter valve.~~
3. ~~Drain: J.R. Smith 2005YA or Zurn.~~

~~MM. EWC-1 Electric Water Cooler, Barrier Free Bi-Level Unit:~~

1. ~~Fixture: Haws 1011.8, stainless steel construction, oval bowls.~~
2. ~~Electrical: 1/5 hp; 120 volt. Coordinate hardware electrical connection with Division 26.~~
3. ~~Finish: Stainless steel.~~
4. ~~Mounting Height: 36" floor to top of bubbler, maximum.~~

~~NN. EWC-2 Electric Water Cooler - Barrier Free:~~

1. ~~Fixture: Haws H1001.8, stainless steel unit, 8.0 gph capacity, 1/5 hp, 120 volt supply, coordinate with Division 26.~~
2. ~~Finish: Stainless steel.~~
3. ~~Mounting Height: 36" floor to top of bubbler, maximum.~~

~~OO. EWC-3 Electrical Water Cooler:~~

1. ~~Fixture: Haws HWUAC08 stainless steel cabinet with satin finish stainless steel basin. 7.5 gph, 5.1 amps, 460 watts, 120V. Coordinate with division 26.~~
2. ~~Mounting Height: 36" to top of bubbler.~~

~~PP. EWC-4 Dual Height Electric Water Cooler:~~

1. ~~Fixture: Haws HWUAC08L dual height stainless steel cabinets with satin finish stainless steel basins. 7.7 gph, 4.5 amps, 415 watts, 120V. Coordinate with division 26.~~
2. ~~Mounting height: 36" to top of bubbler.~~

~~QQ. DF-1 Dual Height Drinking Fountain:~~

1. ~~Fixture: Haws 1011 dual height heavy gauge stainless steel with No. 4 satin finish.~~
2. ~~Mounting height: 36" to top of bubbler.~~
3. ~~<<Remote Chiller: Haws HCR8 with grill.>>~~

~~RR. DF-2 Drinking Fountain:~~

1. ~~Fixture: Haws 1001, 18 gauge stainless steel with No.4 satin finish.~~
2. ~~<<Back Panel: Haws BP6.>>~~
3. ~~Mounting height: 36" to top of bubbler.~~
4. ~~<<Remote chiller: Haws HCR8 with grill.>>~~

PART 3 - EXECUTION

3.1 GENERAL

A. Verify all dimensions by field measurements. Verify that all plumbing fixtures may be installed in accordance with pertinent codes and regulations, the original design, and the referenced standards.

B. Examine rough-in for potable water and waste piping systems to verify actual locations of piping connections prior to installing fixtures.

C. Examine walls, floors and cabinets for suitable conditions where fixtures are to be installed.

D. Install plumbing fixtures level and plumb, in accordance with fixture manufacturer's written instructions, rough-in drawings, and pertinent codes and regulations, the original design, and the referenced standards.

E. Comply with the installation requirements of ADA with respect to plumbing fixtures for the physically handicapped.

F. Fasten plumbing fixtures securely to supports or building structure. Secure supplies behind or within wall construction to provide rigid installation.

G. Install a stop valve in an accessible location in the water connection to each fixture.

H. Install escutcheons at each wall, floor, and ceiling penetration in exposed finished locations and within cabinets and millwork.

I. Seal fixtures to walls and floors using silicone sealant as specified in Division 07. Match sealant color to fixture color.

J. Test fixtures to demonstrate proper operation upon completion of installation and after units are water pressurized. Replace malfunctioning units, then retest.

K. Inspect each installed unit for damage. Replace damaged fixtures.

L. Adjust water pressure at drinking fountains, faucets, shower valves, and flush valves to provide proper flow stream.

M. Replace washers or cartridges of leaking or dripping faucets and stops.

N. Clean fixtures, trim, and strainers using manufacturer's recommended cleaning methods and materials.

O. During construction cover all installed fixtures, sinks, and water coolers with cardboard boxes and wrap with Visqueen.

P. Provide flush valve and faucet support behind wall.

END OF SECTION

SECTION 23 05 00 - BASIC HVAC MATERIALS AND METHODS

PART 1 - GENERAL

1.1 APPLICABLE REQUIREMENTS

A. All work under this Section shall comply with the requirements of General Conditions, Supplemental Conditions, Special Conditions and Division 01 - General Requirements, and shall include all Mechanical Sections specified herein.

1.2 SCOPE OF THIS SECTION

A. All work to be furnished and installed under this Section shall comply with all the requirements of Division 01, and shall include, but not necessarily be limited to, the following:

1. Compliance with all codes and standards applicable to this jurisdiction
2. Shop Drawings for Equipment
3. Coordination Documents
4. Record Drawings
5. Start-up Service and Building Commissioning
6. Instruction, Maintenance, and O & M Manuals
7. Meeting Project Safety and Indemnity requirements
8. Proper Cleaning and Closing
9. Supplying proper Warranty information
10. Supply specified Guarantee documentation
11. Design and provision of Supports and Anchors
12. Pipe Portals
13. Equipment Rails
14. Access Panels and Doors
15. Identification Markers
16. Coordination of Electrical requirements for equipment provided

1.3 DESCRIPTION OF WORK

A. The Contract Documents, including Specifications and Construction Drawings, are intended to provide all material and labor to install complete heating, ventilating, air conditioning systems for the building and shall interface with all existing building systems affected by new construction.

B. The Contractor shall refer to the architectural interior details, floor plans, elevations, and the structural and other Contract Drawings and he shall coordinate his work with that of the other trades to avoid interference. The plans are diagrammatic and show generally the locations of the fixtures, equipment, and pipe lines and are not to be scaled; all dimensions and existing conditions shall be checked at the building.

C. The Contractor shall comply with the project closeout requirements as detailed in General Requirements of Division 01.

D. Where project involves interface with existing building and site systems, every effort has been made to note existing utilities and services. However, the Contractor should thoroughly familiarize themselves with existing conditions and be aware that in some cases information is not available as to concealed conditions, which exist in portions of the existing building affected by this work.

1.4 DESCRIPTION OF BID DOCUMENTS

A. Specifications:

1. Specifications, in general, describe quality and character of materials and equipment.
2. Specifications are of simplified form and include incomplete sentences.

B. Drawings:

1. Drawings in general are diagrammatic and indicate sizes, locations, connections to equipment and methods of installation.
2. Before proceeding with work check and verify all dimensions.
3. Assume all responsibility for fitting of materials and equipment to other parts of equipment and structure.
4. Make adjustments that may be necessary or requested, in order to resolve space problems, preserve headroom, and avoid architectural openings, structural members and work of other trades.
5. Where existing pipes, conduits and/or ducts prevent installation of new work as indicated, relocate, or arrange for relocation, of existing pipes, conduits and/or ducts. Verify exact location and elevation of existing piping prior to any construction.
6. If any part of Specifications or Drawings appears unclear or contradictory, apply to Architect or Engineer for his interpretation and decision as early as possible, including during bidding period.

1.5 DEFINITIONS

A. “Above Grade”: Not buried in the ground and not embedded in concrete slab on ground.
B. “Accessible”: Ability to perform recommended maintenance without removal of services or equipment and requiring no special platforms.
C. “Actuating” or “Control” Devices: Automatic sensing and switching devices such as thermostats, pressure, float, electro-pneumatic switches and electrodes controlling operation of equipment.
D. “Below Grade”: Buried in the ground or embedded in concrete slab on ground.
E. “Concealed”: Embedded in masonry or other construction, installed in furred spaces, within double partitions or hung ceilings, in trenches, in crawl spaces, or in enclosures. In general, any item not visible or directly accessible.
F. “Connect”: Complete hook-up of item with required service.
G. “Exposed”: Not installed underground or “concealed.”
H. “Furnish”: To supply equipment and products as specified.
I. “Indicated,” “Shown” or “Noted”: As indicated, shown or noted on Drawings or Specifications.
J. “Install”: To erect, mount and connect complete with related accessories.
K. “Motor Controllers”: Manual or magnetic starters (with or without switches), individual push buttons or hand-off-automatic (HOA) switches controlling the operation of motors.
L. “Piping”: Pipe, tube, fittings, flanges, valves, controls, strainers, hangers, supports, unions, traps, drains, insulation, and related items.
M. “Provide”: To supply, install and connect as specified for a complete, safe and operationally ready system.
N. “Reviewed,” “Satisfactory” or “Directed”: As reviewed, satisfactory, or directed by or to Architect/Engineer/Owner.
O. “Rough-In”: Provide all indicated services in the necessary arrangement suitable for making final connections to fixture or equipment.
P. “Shall”: An exhortation or command to complete the specified task.
Q. “Similar” or “Equal”: Of base bid manufacture, equal in materials, weight, size, design, and efficiency of specified products.
R. “Supply”: To purchase, procure, acquire and deliver complete with related accessories.

S. "Typical" or "Typ": Exhibiting the qualities, traits, or characteristics that identify a kind, class, number, group or category. Of or relating to a representative specimen. Application shall apply to all other similarly identified on plan or detail.
T. "Will": A desire to complete the specified task. Allows some flexibility in application as opposed to "Shall".
U. "Wiring": Raceway, fittings, wire, boxes and related items.
V. "Work": Labor, materials, equipment, apparatus, controls, accessories, and other items required for proper and complete installation.

1.6 RELATED WORK SPECIFIED ELSEWHERE

A. All Division 23 Mechanical sections included herein.
B. Division 33: Utility Site Work.

1. Coordination of excavation of trenches and the installation of mechanical systems and piping on site.

C. Division 03: Concrete.

1. All concrete work for Mechanical Division shall be included in Division 23 under the appropriate Sections and shall include:

a. Concrete curbs and housekeeping pads for the mechanical equipment.
b. Thrust blocks, pads, and boxes for mechanical equipment.
c. Coordination of floor drain and floor sink installations in sloped floors.

D. Division 07: Thermal and Moisture Protection.

1. Flashing and sheet metal
2. Sealants and caulking
3. Firestopping

E. Division 09: Painting:

1. Division 23 installers shall perform all painting, except where specifically stated otherwise in Division 09.
2. Painting of all exposed steel, piping, ductwork, insulation, equipment and materials.
3. Paint all exposed gas piping, interior and exterior to the building, yellow.

F. Division 10: Miscellaneous Metals.

1. Exterior louvers and grilles shall be included in this Section.

G. Division 26: Electrical is related to work of:

1. Power connections to all mechanical equipment

H. Division 28: Electronic Safety and Security is related to work of:

1. Fire protection alarms and relays
2. Smoke detector and monitoring
3. Life Safety Systems

I. Division 01, Section 01 81 13, "Sustainable Design Requirements"
J. Division 01, Section 01 73 20, "Indoor Air Quality"

1.7 CODES AND STANDARDS

A. The Contractor is cautioned that code requirements not explicitly detailed in these specifications or drawings, but which may be reasonably inferred or implied from the nature of the project, must be provided as part of the contract.
B. Perform all tests required by governing authorities and required under all Division 23 Sections. Provide written reports on all tests.
C. Electrical devices and wiring shall conform to the latest standards of NEC; all devices shall be UL listed and labeled.
D. All mechanical work shall comply with the Americans with Disabilities Act (ADA).
E. All excavation work must comply with all provisions of state laws including notification to all owners of underground utilities at least 48 business day hours, but not more than 10 business days, before commencing an excavation.
F. Provide in accordance with rules and regulations of the following:

1. Building Codes enforced by the Authority Having Jurisdiction in California:

   a. 2010 Building Standards Administrative Code, Part 1, Title 24 C.C.R.
   b. 2010 California Building Code (CBC), Part 2, Title 24 C.C.R.
   c. (2009 International Building Code and 2010 California Amendments)
   d. 2010 California Electrical Code (CEC), Part 3, Title 24 C.C.R.
   e. (2008 National Electrical Code and 2010 California Amendments)
   f. 2010 California Mechanical Code (CMC) Part 4, Title 24 C.C.R
   g. 2009 Uniform Mechanical Code and 2010 California Amendments)
   h. 2010 California Plumbing Code (CPC), Part 5, Title 24 C.C.R.
   i. (2009 Uniform Plumbing Code and 2010 California Amendments)
   j. 2010 California Energy Code (CEC), Part 6, Title 24 C.C.R.
   k. 2010 California Fire Code, Part 9, Title 24 C.C.R.
   l. (2009 International Fire Code and 2010 California Amendments
   m. 2010 California Green building Standards Code (CALGreen), Part 11, Title 24 C.C.R.
   n. 2010 California Referenced Standards, Part 12, Title 24 C.C.R.
   o. Title 19 C.C.R. Public Safety, State Fire Marshal Regulations.

2. Local, city, county and state codes and ordinances
3. Local Bureau of Buildings
4. Local Health Department
5. Local and State Fire Prevention Districts
6. State Administrative Codes

G. Provide in accordance with appropriate referenced standards of the following:

1. NFPA - National Fire Protection Association
2. AABC - Associated Air Balance Council
3. CSA - Canadian Standards Association
4. ADC - Air Diffuser Council
5. AMCA - Air Moving and Conditioning Association
6. ANSI - American National Standards Institute
7. ARI - Air Conditioning and Refrigeration Institute
8. ASHRAE - American Society of Heating, Refrigerating & Air Conditioning Engineers
9. ASME - American Society of Mechanical Engineers
10. ASTM - American Society for Testing Materials
11. AWS - American Welding Society
12. FM - Factory Mutual
13. MSS - Manufacturer's Standardization Society
14. NEMA - National Electrical Manufacturer's Association
15. SMACNA - Sheet Metal and Air Conditioning Contractors National Association
16. UL - Underwriter's Laboratories

17. ADA - Americans with Disabilities Act
18. ETL - Electrical Testing Laboratories

1.8 QUALITY ASSURANCE

A. Manufacturer's Nameplates: Nameplates on manufactured items shall be aluminum or Type 304 stainless steel sheet, not less than 20 USG (0.0375"), riveted or bolted to the manufactured item, with nameplate data engraved or punched to form a non-erasable record of equipment data.
B. Current Models. All work shall be as follows:

1. Manufactured items furnished shall be the current, cataloged product of the manufacturer.
2. Replacement parts shall be readily available and stocked in the USA.

C. Experience: Unless more stringent requirements are specified in other sections of Division 23, manufactured items shall have been installed and used, without modification, renovation or repair, on other projects for not less than one year prior to the date of bidding for this project.

1.9 GENERAL REQUIREMENTS

A. Examine all existing conditions at building site.
B. Review contract documents and technical specifications for extent of new work to be provided.
C. Provide and pay for all permits, licenses, fees and inspections.
D. Prepare a Construction IAQ Management Plan meeting the SMACNA IAQ guidelines. See Section 233113 Air Distribution for a summary of requirements.
E. Install equipment and materials to provide required access for servicing and maintenance. Coordinate the final location of concealed equipment and devices requiring access with final location of required access panels and doors. Allow ample space for removal of all parts that require replacement or servicing. This work shall include furnishing and installing all access doors required for mechanical access.
F. Verify final locations for rough-ins with field measurements and with the requirements of the actual equipment to be connected. Refer to Equipment Specifications in Divisions 02 through 48 for rough-in requirements.
G. Coordinate mechanical equipment and materials installation with other building components.
H. Verify all dimensions by field measurements.
I. Arrange for chases, slots, and openings in other building components to allow for mechanical installations.
J. Coordinate the installation of required supporting devices and sleeves to be set in poured-in-place concrete and other structural components, as they are constructed.
K. Sequence, coordinate, and integrate installations of mechanical materials and equipment for efficient flow of the work. Give particular attention to large equipment requiring positioning prior to closing-in the building.
L. Coordinate the cutting and patching of building components to accommodate the installation of mechanical equipment and materials. Contractor to provide for all cutting and patching required for installation of his work unless otherwise noted.
M. Where mounting heights are not detailed or dimensioned, install mechanical services and overhead equipment to provide the maximum headroom possible.
N. Install mechanical equipment to facilitate maintenance and repair or replacement of equipment components. Connect equipment for ease of disconnecting, without interference with other installations.
O. Coordinate the installation of mechanical materials and equipment above ceilings with ductwork, piping, conduits, suspension system, light fixtures, cable trays, sprinkler piping and heads, and other installations.

P. Coordinate connection of mechanical systems with exterior underground and overhead utilities and services. Comply with requirements of governing regulations, franchised service companies, and controlling agencies. Provide required connection for each service.

Q. Coordinate with Owner in advance to schedule shutdown of existing systems to make new connections. Provide valves in new piping to allow existing system to be put back in service with minimum down time.

R. All materials (such as insulation, ductwork, piping, wiring, controls, etc.) located within air plenum spaces, air shafts, and occupied spaces shall have a flame-spread index of 25 or less, and smoke-developed index of 50 or less, as tested by ASTM E84 (NFPA 255) Method. In addition, the products, when tested, shall not drip flame particles, and flame shall not be progressive. Provide Underwriters Laboratories, Inc., label or listing, or satisfactory certified test report from an approved testing laboratory to prove the fire hazard ratings for materials proposed for use do not exceed those specified.

S. Coordinate installation of floor drains and floor sinks with work of other trades, such that finished floor slopes to drains and floor sinks are flush with surrounding floor.

T. Products made of or containing lead, asbestos, mercury or other known toxic or hazardous materials are not acceptable for installation under this Division. Any such products installed as part of the work of the Division shall be removed and replaced and all costs for removal and replacement shall be borne solely by the installing Contractor.

1.10 MINOR DEVIATIONS

A. The Drawings are diagrammatic and show the general arrangements of all mechanical work and requirements to be performed. It is not intended to show or indicate all offsets, fittings, and accessories which will be required as a part of the work of this Section.

B. The Contractor shall review the structural and architectural conditions affecting his work. It is the specific intention of this section that the contractor's scope of work shall include:

1. Proper code complying support systems for all equipment whether or not scheduled or detailed on drawings or in these specifications.
2. Minor deviations from the mechanical plans required by architectural and structural coordination.

C. The Contractor shall study the operational requirements of each system, and shall arrange his work accordingly, and shall furnish such fittings, offsets, supports, accessories, as are required for the proper and efficient installation of all systems from the physical space available for use by this section. This requirement extends to the Contractor's coordination of this section's work with the “Electrical Work”. Should conflicts occur due to lack of coordination, the time delay, cost of rectification, demolition, labor and materials, shall be borne by the Contractor and shall not be at a cost to the Owner.

D. Minor deviations in order to avoid conflict shall be permitted where the design intent is not altered.

E. Advise the Architect, in writing, in the event a conflict occurs in the location or connection of equipment. Bear all costs for relocation of equipment, resulting from failure to properly coordinate the installation or failure to advise the Architect of conflict.

1.11 PRODUCT SUBSTITUTIONS

A. The Contractor shall certify the following items are correct when using substituted products other than those scheduled or shown on the drawings as a basis of design:

1. The proposed substitution does not affect dimensions shown on drawings.
2. The Contractor shall pay for changes to building design, including engineering design, detailing, structural supports, and construction costs caused by proposed substitution.
3. The proposed substitution has no adverse effect on other trades, construction schedule, or specified warranty requirements.

4. Maintenance and service parts available locally are readily obtainable for the proposed substitute.

B. The Contractor further certifies function, appearance, and quality of proposed substitution are equivalent or superior to specified item.
C. The Contractor agrees that the terms and conditions for the substituted product that are found in the contract documents apply to this proposed substitution.

1.12 SHOP DRAWINGS AND EQUIPMENT SUBMITTALS

A. Prior to construction submit for review all materials and equipment in accordance with Division 01 requirements.
B. After approval of preliminary list of materials, the Contractor shall submit Shop Drawings and manufacturer's Certified Drawings to the Architect for approval.
C. The Contractor shall submit approved Shop Drawings and manufacturer's equipment cuts, of all equipment requiring connection by Division 26, to the Electrical Contractor for final coordination of electrical requirements. Contractor shall bear all additional costs for failure to coordinate with Division 26.
D. Submittals and Shop Drawings shall be submitted as a complete package bound in a 3-ring binder with tabs for each specification section. The approved submittals shall be converted into Operations & Maintenance Manuals at the completion of the project. Submit six (6) typed copies of submittals. Refer to Division 01 for additional requirements.

1.13 UNIT PRICING SUBMITTALS

A. Prior to construction submit for review all materials and equipment in accordance with Division 01 requirements.
B. Preliminary List of Materials and Unit Price Items: Within thirty (30) days after awarding of the Contract, submit to architect for preliminary approval a complete list of manufacturer’s names and model numbers of proposed materials and equipment. Also include proposed list of unit price items for review.

1. Indicate substituted items.
2. Identify test and balancing agency.
3. Identify independent testing laboratory for water analysis.

C. The Contractor shall submit with preliminary list of materials a unit price list for each item furnished on this project. Included with price shall be labor cost index.
D. Submittals and Shop Drawings shall be submitted as a complete package bound in a 3-ring binder with tabs for each specification section. Submit six (6) typed copies of submittals. Refer to Division 01 for additional requirements.

1.14 COORDINATION DOCUMENTS

A. The Contractors shall prepare coordinated Shop Drawings to coordinate the installation and location of all HVAC equipment, ductwork, grilles, diffusers, piping, fire sprinklers, lights, audio/video systems, electrical services and all system appurtenances. The Drawings shall include all mechanical rooms and floor plans. The Drawings shall be Overlay Drawings showing each discipline on a single sheet. The Drawings shall be keyed to the structural column identification system, and shall be progressively numbered. Prior to completion of the Drawings, the Contractor shall coordinate the proposed installation with the Architect and the structural requirements, and all other trades (including HVAC, Plumbing, Fire Protection, Electrical, Ceiling Suspension, and Tile Systems), and provide reasonable maintenance access requirements. When conflicts are identified, modify system layout as necessary to resolve. Do not fabricate, order or install any equipment or materials until coordination documents are approved by the General Contractor, Architect, and Owner.

Within thirty (30) days after award of Contract, submit proposed coordination document Shop Drawing schedule, allowing adequate time for review and approval by parties mentioned above. Drawings should be prepared and submitted for approval on a floor-by-floor basis to phase with building construction.

B. The Drawings shall be prepared as follows:

1. The Sheet Metal (Mechanical) Contractor shall prepare Drawings to an accurate scale of 1/4" = 1'-0" or larger, on reproducible media sheets (vellum) or AutoCAD disks. Obtain reproducible or AutoCAD and/or Revit files of the HVAC design from the Architect, or Engineer, at cost plus. Drawings are to be same size as Contract Drawings and shall indicate location, size and elevation above finished floor, of all HVAC equipment, ductwork, and piping. Plans shall also indicate proposed ceiling grid and lighting layout, as shown on electrical plans and reflected ceiling plans.
2. The Plumbing Contractor shall obtain reproducible plans or AutoCAD disks from the Mechanical Contractor, and indicate all plumbing lines including fittings, hangers, access panels, valves, and bottom of pipe elevations above finished floor.
3. The Fire Protection Contractor shall obtain reproducible plans or AutoCAD disks with the detailed mechanical and plumbing work shown. The Sprinkler Contractor shall indicate location of all sprinkler heads and piping, including valves and fittings, dimensions from column lines, and bottom of pipe elevations above finished floor.
4. Plans are to incorporate all addenda items and change orders.
5. Distribute plans to all trades and provide additional coordination as needed.

C. Advice the Architect in the event a conflict occurs in the location or connection of equipment. Bear all costs for relocation of equipment, resulting from failure to properly coordinate the installation or failure to advise the Architect of conflict.

D. Provide means of access to all valves, dampers, controllers, operable devices, and other apparatus that may require adjustment or servicing.

E. Verify in field exact size, location, invert, and clearances regarding all existing material, equipment and apparatus, and advise the Architect of any discrepancies between those indicated on the Drawings and those existing in the field prior to any installation related thereto.

F. Final Coordination Drawings with all appropriate information added are to be submitted as Record Drawings at completion of project.

G. Provide copy of Record Drawings to Testing and Balancing Contractor for their use when doing their work.

1.15 RECORD DRAWINGS

A. Before commencing installation, obtain an extra set of prints from Architect, marked “Record”. Keep this set of Drawings at the job site at all times, and use it for no other purpose but to mark on it all the changes and revisions to the Contract Drawings resulting from coordination with other trades. At the completion of the project,

1. Obtain a clean set of reproducible from the Architect or Engineer, at cost plus, and transfer the revisions to these reproducible in a neat and orderly fashion.

   OR

2. Edit project AutoCAD files to incorporate all site markups, changes, and revisions to the Contract Drawings. Submit plots of Record Drawings and six copies CD Roms labeled with all record AutoCAD drawing files.

B. Provide copy of Record Drawings to Testing and Balancing Contractor for use when doing his work.

C. Mark Drawings to indicate revisions to piping and ductwork, size and location both exterior and interior; including locations of coils, dampers and other control devices, filters, boxes and similar units requiring periodic maintenance or repair; actual equipment locations,

dimensioned from column lines; actual inverts and locations of underground piping; concealed equipment, dimensioned to column lines; mains and branches of piping systems, with valves and control devices located and numbered, concealed unions located, and with items requiring maintenance located (i.e. – valves, traps, strainers, expansion compensators, tanks, etc.); Change Orders; concealed control system devices.

D. Mark Specifications to indicate approved substitutions; Change Orders; actual equipment and materials used.

E. Refer also to Special Conditions in Division 01 for full scope of requirements.

1.16 START-UP SERVICE AND BUILDING COMMISSIONING

A. Prior to start-up, be assured that systems are ready, including checking the following: Proper equipment rotation, proper wiring, auxiliary connections, lubrication, venting, controls, and installed and properly set relief and safety valves.

B. Provide services of factory-trained technicians for start-up of air conditioning units, temperature controls, chillers, boilers, pumps, and other major pieces of equipment. Certify in writing compliance with this Paragraph, stating names of personnel involved and the date work was performed.

C. Provide certificates of calibration for all sensors required for control and monitoring including temperature and pressure.

D. Refer to other Division 23 Sections for additional requirements.

1.17 INSTRUCTION, MAINTENANCE, AND O&M MANUALS

A. O&M Manuals: Upon completion of the work, and prior to training of Owner's personnel, the Contractor shall submit to the Architect complete set of operating instructions, maintenance instructions, part lists, and all other bulletins and brochures pertinent to the operation and maintenance for equipment furnished and installed as specified in this section, bound in a durable binder. Refer to Division 01.

B. Contractor shall be responsible for providing proper instruction of the of Owner's personnel for operation and maintenance of equipment, and apparatus installed as specified in Division 23 to be no less than two hours for each piece of equipment. The Contractor shall develop and submit training materials prior to this training. These materials shall include qualifications of the trainer, training agenda, learning objectives, and a written test to be administered at the end of the training session. Operation and Maintenance manuals must present, incorporated and referenced in the training sessions.

1.18 POSTED OPERATING INSTRUCTIONS

A. Furnish approved operating instructions for systems and equipment indicated in the technical sections for use by operation personnel. The operating instructions shall include wiring diagrams, control diagrams, and control sequence for each principal system and equipment. Print or engrave operating instructions and frame under glass or in approved laminated plastic. Post instructions where directed. Attach or post operating instructions adjacent to each principal system and equipment including start-up, operating, shutdown, safety precautions and procedure in the event of equipment failure. Provide weather-resistant materials or weatherproof enclosures for operating instructions exposed to the weather. Operating instructions shall not fade when exposed to sunlight and shall be secured to prevent easy removal.

1.19 SAFETY AND INDEMNITY

A. The Contractor shall be solely and completely responsible for conditions of the job site including safety of all persons and property during performance of the work. This requirement will apply continuously and not be limited to normal hours of work.

B. No act, service, Drawing, review, or Construction Review by the Owner, Architect, the Engineers or their consultants, is intended to include the review of the adequacy of the Contractor's safety measures, in, on, or near the construction site.

C. The Contractor performing work under this Division of the Specifications shall hold harmless, indemnify and defend the Owner, the Architect, the Engineers and their consultants, and each of their officers, employees and agents from any and all liability claim, losses or damage arising, or alleged to arise from bodily injury, sickness, or death of a person or persons, and for all damages arising out of injury to or destruction of property arising directly or indirectly out of, or in connection with, the performance of the work under the Division of the Specifications, and from the Contractor's negligence in the performance of the work described in the Construction Contract Documents; but not including the sole negligence of the Owner, the Architect, the Engineers, and their consultants or their officers, employees and agents.

1.20 CLEANING AND CLOSING

A. All work shall be inspected, tested, and approved before being concealed or placed in operation.

B. Upon completion of the work, all equipment installed as specified in this section, and all areas where work was performed, shall be cleaned to provide operating conditions satisfactory to the Architect.

1.21 WARRANTIES

A. All equipment shall be provided with a minimum one-year warranty to include parts and labor. Refer to individual Equipment Specifications for extended or longer-term warranty requirements.

B. Provide complete warranty information for each item, to include product or equipment, date of beginning of warranty or bond; duration of warranty or bond; and names, addresses, telephone numbers and procedures for filing a claim and obtaining warranty services.

C. Service during warranty period: Contractor shall provide maintenance as specified elsewhere during the 12-month warranty period.

1.22 GUARANTEE

A. The Contractor shall guarantee and service all workmanship and materials to be as represented by him and shall repair or replace, at no additional cost to the Owner, any part thereof which may become defective within the period of one (1) year after the Date of Final Acceptance, ordinary wear and tear excepted.

B. Contractor shall be responsible for and pay for any damages caused by or resulting from defects in his work.

PART 2 - PRODUCTS

2.1 GENERAL

A. Furnish and install all new material, equipment, and apparatus hereinafter specified unless specifically noted otherwise. All material, equipment, and apparatus shall be identified by the manufacturer's name, nameplate, and pertinent data.

B. All materials, equipment, and apparatus are mentioned as standards unless noted otherwise. The words “or approved equal” shall be considered to be subsequent to all manufacturers’ names used herein, unless specifically noted that substitutes are not allowed.

2.2 SUPPORTS AND ANCHORS

A. General: Comply with applicable codes pertaining to product materials and installation of supports and anchors, including, but not limited to, the following:

1. UL and FM Compliance: Provide products, which are UL listed and FM approved.
2. ASCE 7-05: “American Society of Civil Engineers.”
3. 2009 International Building Code (IBC)
4. MSS Standard Compliance: Manufacturer's Standardization Society (MSS).
5. SMACNA: “Seismic Restraint Manual: Guidelines for Mechanical Systems.”
6. NFPA: Pamphlet number 13 and 14 for fire protection systems.
7. Provide copper plated or plastic coated supports and attachment for copper piping systems. Field applied coatings or tape is unacceptable.
8. Manufacturer: B-Line, Grinnell, Michigan, Tolco, Kin-Line, Simpson, or Superstrut.

B. Horizontal Piping Hangers and Supports: Except as otherwise indicated, provide factory-fabricated hangers and supports of one of the following MSS types listed.

1. Adjustable Steel Clevis Hangers: MSS Type 1.
2. Adjustable Steel Swivel Band Hangers: MSS Type 10.
3. U-Bolts: MSS Type 24.
4. Pipe Slides and Slide Plates: MSS Type 35, including one of the following plate types:

   a. Plate: Unguided type.
   b. Plate: Guided type.
   c. Plate: Hold-down clamp type.

5. Pipe Saddle Supports: MSS Type 36, including steel pipe base support and cast iron floor flange.
6. Pipe Saddle Supports with U-Bolt: MSS Type 37, including steel pipe base support and cast iron floor flange.
7. Adjustable Pipe Saddle Supports: MSS Type 38, including steel pipe base support and cast iron floor flange.
8. Single Pipe Roller with Malleable Sockets: MSS Type 41.
9. Adjustable Roller Hangers: MSS Type 43.
10. Pipe Roll Stands: MSS Type 44.
11. Pipe Guides: Provide factory-fabricated guides of cast semi-steel or heavy fabricated steel, consisting of a bolted two-section outer cylinder and base with a two-section guiding spider bolted tight to pipe. Size guide and spiders to clear pipe and insulation (if any), and cylinder. Provide guides of length recommended by manufacturer to allow indicated travel.

C. Horizontal Cushioned Pipe Clamp: Where pipe hangers are called out to absorb vibration or shock install a piping clamp with thermoplastic elastomer insert. Cush-A-Clamp or equal.

D. Vertical Piping Clamps: Provide factory-fabricated two-bolt vertical piping riser clamps, MSS Type 8.

E. Hanger-Rod Attachments: Except as otherwise indicated, provide factory-fabricated hanger-rod attachments of one of the following MSS types listed.

1. Steel Turnbuckles: MSS Type 13.
2. Steel Clevises: MSS Type 14.
3. Swivel Turnbuckles: MSS Type 15.
4. Malleable Iron Eye Sockets: MSS Type 16.
5. Steel Weldless Eye Nuts: MSS Type 17.

F. Building Attachments: Except as otherwise indicated, provide factory-fabricated building attachments of one of the following types listed.

1. Concrete Inserts: MSS Type 18 or Blue Banger Hanger by Simpson
2. Steel Brackets: One of the following for indicated loading:
   a. Light Duty: MSS Type 31.
   b. Medium Duty: MSS Type 32.
   c. Heavy Duty: MSS Type 33.
3. Horizontal Travelers: MSS Type 58.
4. Internally Threaded Expansion Shell Anchors: By Simpson or approved equal.
5. Concrete Screw Anchors: Titen HD by Simpson or approved equal.

G. Saddles and Shields: Except as otherwise indicated, provide saddles or shields under piping hangers and supports, factory-fabricated, for all insulated piping. Size saddles and shields for exact fit to mate with pipe insulation.

1. Pipe Covering Protection Saddles: MSS Type 39; fill interior voids with segments of insulation matching adjoining insulation.
2. Insulation Protection Shields: MSS Type 40, 18" minimum, or of the length recommended by manufacturer to prevent crushing of insulation. High-density insulation insert lengths shall match or exceed shield length.
3. Thermal Hanger Shields: Constructed of 360° insert of waterproofed calcium silicate (60 psi flexural strength minimum) encased in 360° sheet metal shield. Provide assembly of same thickness as adjoining insulation. Shield length shall match or exceed length of calcium silicate insert.
4. Thermal Hanger Couplings: Constructed of high strength plastic coupling to retain tubing and join insulation at clevis hangers and strut-mounted clamps. Klo-Shure Insulation Coupling or equal.

H. Miscellaneous Materials:

1. Metal Framing: Provide products complying with NEMA STD ML1.
2. Steel Plates, Shapes, and Bars: Provide products complying with ASTM A36.
3. Cement Grout: Portland Cement (ASTM C150, Type I or Type III) and clean uniformly graded, natural sand (ASTM C404, Size No. 2). Mix at a ratio of 1.0 part cement to 3.0 parts sand by volume, with minimum amount of water required for placement and hydration.
4. Heavy-Duty Steel Trapezes: Fabricate from steel shapes selected for loads required. Weld steel in accordance with AWS standards.
5. Pipe Brackets: “HoldRite” copper plated brackets. Insulate brackets attached to metal studs with felt.

2.3 PIPE PORTALS

A. Where pipe portals are not provided by other sections of Specification, provide prefabricated insulated pipe portals as required for piping penetrating through the roof where shown on plans. Field built pipe portals are acceptable alternatives - provide detail of construction for review.

B. Standard pipe portals, unless otherwise noted, shall be constructed as follows:

1. Curb shall be constructed of heavy gauge galvanized steel with continuous welds on shell seams.
2. Insulation to be 1-1/2" thick, 3 lb density rigid fiberglass.
3. Curb to have a raised 3" (minimum), 45° cant.
4. Curb to have 1-1/2" x 1-1/2" wood nailer (minimum).
5. Curb height to be 8" (minimum) above roof deck.
6. Cant shall be raised to match roof insulation thickness.
7. Cover or flashing to be constructed of galvanized steel or other suitable material to provide sturdy weather tight closure. Provide collars and rubber nipples with draw

bands of sizes required by piping. Size curb, cover and nipples per manufacturer's recommendations.

8. Manufacturer: Roof Products Systems or Pate.

2.4 EQUIPMENT/PIPING RAILS

A. Where equipment/pipe rails are not provided by other sections of Specification, provide prefabricated reinforced equipment rails as required for support of equipment and piping. Field built curbs are acceptable alternatives - provide detail of construction for review.

B. Standard equipment rail, unless otherwise noted, shall be constructed as follows:

1. Construct of heavy gauge galvanized steel with continuous welds on shell seams.
2. Provide internal reinforcing supports welded as required to meet application requirements.
3. Equipment rails to have raised 3" (minimum), 45° cant.
4. Equipment rails to have 1-1/2" x 1-1/2" wood nailer (minimum) and counterflashing.
5. Equipment rail height to be 6" (minimum) above roof deck.
6. Cant shall be raised to match roof insulation thickness.

C. Equipment rails to be constructed to meet equipment size and weight requirements. Provide tapered rails to match roof pitch where required.

D. Manufacturer: Pate, Vent Products, Thy Curb or Roof Products Systems.

2.5 ACCESS PANELS AND ACCESS DOORS

A. Provide all access doors and panels to serve equipment under this work, including those which must be installed, in finished architectural surfaces. Frame of 16-gauge steel, door of 20 gauge steel. 1" flange width, continuous piano hinge, key operated, prime coated. Refer to Architectural Specifications for the required product Specification for each surface. Contractor is to submit schedule of access panels for approval. Exact size, number and location of access panels is not shown on Plans. Access doors shall be of a size to permit removal of equipment for servicing. Access door shall have same rating as the wall or ceiling in which it is mounted. Provide access panel for each trap primer or concealed valve, for fire and combination fire/smoke dampers, and for volume dampers. Use no panel smaller than 12" x 12" for simple manual access, or smaller than 24" x 24" where personnel must pass through. Provide cylinder lock for access door serving mixing or critical valves in public areas.

B. Included under this work is the responsibility for verifying the exact location and type of each access panel or door required to serve equipment under this work and in the proper sequence to keep in tune with construction and with prior approval of the Architect. Access doors in fire rated partitions and ceilings shall carry all label ratings as required to maintain the rating of the rated assembly.

C. Acceptable Manufacturers: Milcor, Karp, Nystrom, or Elmdor/Stoneman.

D. Submit markup of architectural plans showing size and location of access panels required for equipment access for approval by Architect.

2.6 IDENTIFICATION MARKERS

A. Mechanical Identification Materials: Provide products of categories and types required for each application as referenced in other Division 23 Sections. Where more than single type is specified for application, selection is installer's option, but provide single selection for each product category. Stencils are not acceptable.

B. Plastic Pipe Markers:

1. Snap-On Type: Provide pre-printed, semi-rigid snap-on, color coded pipe markers, complying with ANSI A13.1.

2. Pressure Sensitive Type: Provide pre-printed, permanent adhesive, color coded, pressure sensitive vinyl pipe markers, complying with ANSI A13.1. Secure both ends of markers with color coded adhesive vinyl tape.
3. Insulation: Furnish 1" thick molded fiberglass insulation with jacket for each plastic pipe marker to be installed on uninsulated pipes subjected to fluid temperatures of 125°F (52°C) or greater. Cut length to extend 2" beyond each end of plastic pipe marker.
4. Arrows: Print each pipe marker with arrows indicating direction of flow, either integrally with piping system service lettering (to accommodate both directions), or as separate unit of plastic.

C. Plastic Duct Markers:

1. Provide 4 1/2" x 6" laminated plastic, ANSI A13.1 color coded duct markers with white core lettering.
2. Nomenclature: Include the following:

   a. Direction of air flow

3. Duct service (supply, return, exhaust, etc.).

   a. Duct origin (from)
   b. Duct destination (to)
   c. Design cfm

4. Provide a minimum of every 20 feet on all ducts with a diameter or width greater than 12".

D. Underground-Type Plastic Line Markers: Provide 6" wide x 4 mils thick multi-ply tape, consisting of solid metallic foil core between 2 layers of plastic tape. Markers to be permanent, bright colored, continuous printed, intended for direct burial service.

E. Valve Tags:

1. Brass Valve Tags: Provide 1 1/2" diameter 19-gauge polished brass valve tags with stamp-engraved piping system abbreviation in 1/4" high letters and sequenced valve numbers 1/2" high, and with 5/32" hole for fastener. Fill tag engraving with black enamel.
2. Plastic Laminate Valve Tags: Provide 3/32" thick engraved plastic laminate valve tags, with piping system abbreviations in 1/4" high letters and sequenced valve number 1/2" high, and with 5/32" hole for fasteners.
3. Valve Tag Fasteners: Provide solid brass chain (wire link or beaded type), or solid brass S-hooks of the sizes required for proper attachment of tags to valves, and manufactured specifically for that purpose.
4. Access Panel Markers: Provide 1/16" thick engraved plastic laminate access panel markers, with abbreviations and numbers corresponding to concealed valve. Include 1/8" center hole to allow attachment.
5. Non-potable Water Tags: 1/16" thick, engraved, plastic tags as indicated on Drawings.

F. Plastic Equipment Signs:

1. Provide 4-1/2" x 6" plastic laminate sign, ANSI A.13 color coded with engraved white core lettering.
2. Fasteners: Self-tapping stainless steel screws, except contact-type permanent adhesive where screws cannot or should not penetrate the substrate.
3. Nomenclature: Include the following, matching terminology on schedules as closely as possible:

   a. Name and plan number.
   b. Equipment service.

c. Design capacity.
d. Other design parameters, such as pressure drop, entering and leaving conditions, rpm, etc.

G. Acceptable Manufacturers: Craftmark, Seton, Brady, Marking Services, Inc., or Brimar.

2.7 ELECTRICAL

A. General:

1. All electrical material, equipment, and apparatus specified herein shall conform to the requirements of Division 26.
2. Provide all motors for equipment specified herein. Provide motor starters, controllers, and other electrical apparatus and wiring which are required for the operation of the equipment specified herein.
3. Set and align all motors and drives in equipment specified herein.
4. Provide expanded metal or solid sheet metal guards on all V-belt drives to totally enclose the drive on all sides. Provide holes for tachometer readings. Support guards separately from rotating equipment.
5. Provide for all rotating shafts, couplings, etc., a solid sheet metal, inverted “U” cover over the entire length of the exposed shaft and support separately from rotating equipment. Cover shall extend to below the bottom of the shaft and coupling, and shall meet the requirements of the State Industrial Safety Regulations.
6. Specific electrical requirements (i.e., horsepower and electrical characteristics) for mechanical equipment are scheduled on the Drawings.

B. Quality Assurance:

1. Electrical components and materials shall be UL or ETL listed/labeled as suitable for location and use - no exceptions.

C. Motors:

1. The following are basic requirements for simple or common motors. For special motors, more detailed and specific requirements are specified in the individual equipment Specifications.
2. Torque characteristics shall be sufficient to satisfactorily accelerate the driven loads.
3. Motor sizes shall be large enough so that the driven load will not require the motor to operate in the service factor range. Unless otherwise noted on plans, all motors ½ HP or larger shall be rated for 208 or 460 volt, 3-phase, operation. Unless otherwise noted on plans, all motors less than 1/2 HP shall be rated for 120 volt, single phase operation.
4. Temperature Rating: Motor meets class B rise with class F insulation.
5. Service Factor: 1.15 for poly-phase motors and 1.35 for single phase motors.
6. Motor Construction: NEMA Standard MG 1, general purpose, continuous duty, Design “B”, except “C” where required for high starting torque.

a. Frames: NEMA Standard No. 48 or 56; use driven equipment manufacturer's standards to suit specific application.
b. VFD driven motors to be provided rated for inverter duty (NEMA Standard MG-1, Part 31) and equipped with a shaft grounding device or as an insulated bearing motor.
c. Bearings:

1) Ball or roller bearings with inner and outer shaft seals.
2) Re-greasable, except permanently sealed where motor is normally inaccessible for regular maintenance.
3) Designed to resist thrust loading where belt drives or other drives

product lateral or axial thrust in motor.

4) For fractional horsepower, light duty motors, sleeve type bearings are permitted.

5) Enclosure Type:

a) Open drip-proof motors for indoor use where satisfactorily housed or remotely located during operation.

b) Guarded drip-proof motors where exposed to contact by employees or building occupants.

c) Weather protected Type I for outdoor use, Type II where not housed.

d. Overload Protection: Built-in thermal overload protection where external overload protection is not provided and, where indicated, internal sensing device suitable for signaling and stopping motor at starter.

e. Noise Rating: "Quiet."

f. Efficiency:

1) Motors shall have a minimum efficiency per governing State or Federal codes, whichever is higher.

2) Motors shall meet the NEMA premium efficiency standard

g. Nameplate: Indicate the full identification of manufacturer, ratings, characteristics, construction, special features and similar information.

D. Starters and Electrical Devices:

1. Motor Starter Characteristics:

a. Enclosures: NEMA 1, general purpose enclosures with padlock ears, except in wet locations shall be NEMA 3R with conduit hubs.

b. Type and size of starter shall be as recommended by motor manufacturer and the driven equipment manufacturer for applicable protection and start-up condition.

2. Manual switches shall have pilot lights and all required switch positions for multi-speed motors. Overload Protection: Melting alloy or bi-metallic type thermal overload relays, sized according to actual operating current (field measured).

3. Magnetic Starters:

a. Heavy duty, oil resistant, hand-off-auto (HOA) or as indicated, and pilot lights, properly arranged for single speed or multi-speed operation as indicated.

b. Trip-free thermal overload relays, each phase, sized according to actual operating current (field measured).

c. Interlocks, pneumatic switches and similar devices as required for coordination with control requirements of Division 23 Controls sections.

d. Built-in primary and secondary fused control circuit transformer, supplied from load side of equipment disconnect.

e. Externally operated manual reset.

f. Under-voltage release or protection for all motors over 20 hp.

4. Motor Connections: Liquid tight, flexible conduit, except where plug-in electrical cords are specifically indicated.

E. Low Voltage Control Wiring:

1. General: 14 gauge, Type THHN, color coded, installed in conduit.

2. Manufacturer: General Cable Corp., Alcan Cable, American Insulated Wire Corp., Senator Wire and Cable Co., or Southwire Co.

F. Disconnect Switches:

1. Fusible Switches: For equipment 1/2 HP or larger, provide fused, each phase; heavy duty; horsepower rated; spring loaded quick-make, quick-break mechanism; dead front line side shield; solderless lugs suitable for copper or aluminum conductors; spring reinforced fuse clips; electro silver plated current carrying parts; hinged doors; operating lever arranged for locking in the “OPEN” position; arc quenchers; capacity and characteristics as indicated.
2. Non-Fusible Switches: For equipment less than 1/2 horsepower, switch shall be horsepower rated; toggle switch type with thermal overload quantity of poles and voltage rating as required.

PART 3 - EXECUTION

3.1 GENERAL

A. Workmanship shall be performed by licensed journeymen or master mechanics and shall result in an installation consistent with the best practices of trades.
B. Install work uniform, level and plumb, in relationship to lines of building. Do not install any diagonal, or otherwise irregular work unless so indicated on Drawings or approved by Architect.

3.2 MANUFACTURER'S DIRECTIONS

A. Follow manufacturers' directions and recommendations in all cases where the manufacturers of articles used on this Contract furnish directions covering points not shown on the Drawings or covered in these Specifications.

1. If the contractor must deviate from the manufacturer’s recommendations provide a letter from the manufacturer indicating the clearance to be provided is acceptable for scheduled performance and maintenance.

3.3 INSTALLATION

A. Coordinate the work between the various Mechanical Sections and with the work specified under other Divisions. If any cooperative work must be altered due to lack of proper supervision or failure to make proper and timely provisions, the alternations shall be made to the satisfaction of the Engineer and at the Contractor’s cost. Coordinate wall and ceiling work with the General Contractor, and his subcontractors in locating ceiling air outlets, wall registers, etc.
B. Inspect all material, equipment, and apparatus upon delivery and do not install any damaged or defected materials.

3.4 SUPPORTS AND HANGERS

A. Prior to installation of hangers, supports, anchors, and associated work, installer shall meet at project site with Contractor, installer of each component of associated work, inspection and testing agency representatives, (if any), installers of other work with requirements specified.
B. Installation of Building Attachments: Install building attachments at required locations within concrete or on structural steel for proper piping support. Install additional building attachments where support is required for additional concentrated loads, including valves, flanges, guides, strainers, expansion joints, and at changes in direction of piping. Install concrete inserts before concrete is placed. Fasten insert securely to forms. Where concrete with compressive strength less than 2,500 psi is indicated, install reinforcing bars through opening at top of inserts.

C. Proceed with installation of hangers, supports, and anchors only after required building structural work has been completed in areas where the work is to be installed. Correct inadequacies including, but not limited to, proper placement of inserts, anchors, and other building structural attachments.

D. Install hangers, supports, clamps, and attachments to support piping properly from building structure. Arrange for grouping of parallel runs of horizontal piping to be supported together on trapeze type hangers where possible. Where piping of various sizes is to be supported together by trapeze hangers, space hangers for smallest pipe size or install intermediate supports for smaller diameter pipe. Do not use wire or perforated metal to support piping, and do not support piping from other piping.

E. Install hangers within 12 inches of every change in piping direction, end of pipe run or concentrated load, and within 36 inches of every major piece of equipment. Hangers shall be installed on both sides of flexible connections. Where flexible connection connects directly to a piece of equipment only one hanger is required.

F. Install hangers and supports complete with necessary inserts, bolts, rods, nuts, washers, and other accessories. Except as otherwise indicated for exposed continuous pipe runs, install hangers and supports of same type and style as installed for adjacent similar piping.

G. Support sprinkler piping and gas independently of other piping.

H. Prevent electrolysis in support of copper tubing by use of hangers and supports which are copper plated, or by other recognized industry methods.

I. Hanger Spacing in accordance with following minimum schedules (other spacings and rod sizes may be used in accordance with the SMACNA Seismic Restraint Manual using a safety factor of five):

1. Steel Pipe (Water Filled):

Pipe Size	Max. Hanger Spacing	Rod Size
1/2" to 1 1/4"	5 feet	3/8"
1 ½" to 2"	7 feet	3/8"
2 ½" to 3"	10 feet	1/2"
4" and larger	12 feet	5/8"

2. Steel Pipe (Gas/Air Filled):

Pipe Size	Max. Hanger Spacing	Rod Size
1/2" to 1 1/4"	6 feet	3/8"
1 ½" and larger	10 feet	1/2"

3. Copper Pipe:

Pipe Size	Max. Hanger Spacing	Rod Size
1/2" to 2"	6 feet	3/8"
2 ½" and larger	8 feet	1/2"

4. Glass Pipe:

Pipe Size	Max. Hanger Spacing	Rod Size
1/2" to 2"	6 feet	3/8"
2 ½" and larger	8 feet	1/2"

5. Plastic/Fiberglass Pipe:

Pipe Size	Max. Hanger Spacing	Rod Size
1/2" to 2"	4 feet	3/8"
2 ½" and larger	6 feet	1/2"

6. Caulked Bell and Spigot and Glass Pipe: Provide hanger for each section of pipe, located at shoulder of bell. Where an excessive number of fittings are installed between hangers, provide additional reinforcing.

J. Sloping, Air Venting, and Draining:

1. Slope all piping as specified and as indicated, true to line and grade, and free of traps and air pockets. Unless indicated otherwise, slope piping in the direction of flow as follows:

Service	Inclination	Slope
Heating Water	Up	1" per 40'
Steam	Down	1" per 40'
Chilled Water	Up	1" per 40'
Condensing Water	Up	1" per 40'

2. Provide eccentric reducers in horizontal piping for all sizing changes:
   a. Heating and chilled water piping-top side flat.
   b. Steam piping-bottom side flat.
3. Connect all heating and chilled water branch piping to the bottom of their respective mains.
4. Connect steam supply branch piping to the top of mains.
5. Provide drain valves and hose adapters at all low points in piping.
6. Provide vents at all high points in water piping.

K. Provisions for Movement:

1. Install hangers and supports to allow controlled movement of piping systems and to permit freedom of movement between pipe anchors, and to facilitate action of expansion joints, expansion loops, expansion bends, and similar units.
2. Load Distribution: Install hangers and supports so that piping live and dead loading and stresses from movement will not be transmitted to connecting equipment.
3. Insulated Piping: Comply with the following installation requirements:
   a. Clamps: Attach clamps, including spacers, (if any), to piping with clamps projecting through insulation.
   b. Shields: Where low compressive strength insulation or vapor barriers are indicated on cold or chilled water piping, install shields or inserts.
   c. Saddles: Where insulation without vapor barrier is indicated install protection saddles.

L. Installation of Anchors:

1. Install anchors at proper locations to prevent excessive stresses and to prevent transfer of loading and stresses to connected equipment.
2. Fabricate and install anchor by welding steel shapes, plates and bars to piping and to structure.
3. Where expansion compensators are indicated, install anchors in accordance with expansion unit manufacturer's written instructions, to limit movement of piping and forces to maximums recommended by manufacturer for each unit.
4. Anchor Spacings: Where not otherwise indicated, install anchors at ends of principal pipe runs, at intermediate points in pipe runs between expansion loops and bends.

M. Equipment Supports:

1. Provide all concrete bases, unless otherwise furnished as work of Division 03. Furnish to Division 03 Contractor scaled layouts of all required bases, with dimensions of bases, and location to column centerlines. Furnish templates, anchor bolts, and accessories necessary for base construction.
2. Provide structural steel stands to support equipment not floor mounted or hung from structure. Construct of structural steel members or steel pipe and fittings. Provide factory-fabricated tank saddles for tanks.

N. Adjusting:

1. Hanger Adjustment: Adjust hangers so as to distribute loads equally on attachments.

2. Support Adjustment: Provide grout under supports so as to bring piping and equipment to proper level and elevations.
3. Clean factory-finished surfaces. Repair any marred or scratched surfaces with manufacturer's touch-up paint.

3.5 ROOF CURBS, EQUIPMENT RAILS, PIPE PORTALS

A. Install per manufacturer's instructions.
B. Coordinate with other trades so units are installed when roofing is being installed.
C. Verify roof insulation thickness and adjust raise of cant to match.

3.6 ELECTRICAL REQUIREMENTS

A. Mechanical Contractor shall coordinate with Division 26 work to provide complete systems as required to operate all mechanical devices installed under this Division of work.
B. Installation of Electrical Connections: Furnish, install, and wire (except as may be otherwise indicated) all heating, ventilating, air conditioning, etc., motors and controls in accordance with the following schedule and in accordance with equipment manufacturer's written instructions and with recognized industry practices, and complying with applicable requirements of UL, NEC, and NECA's "Standard of Installation" to ensure that products fulfill requirements. Carefully coordinate with work performed under the Mechanical Division of these Specifications.
C. Division 23 has responsibilities for electrically powered or controlled mechanical equipment which is specified in Division 23 Specifications or scheduled on Division 23 Drawings. The specific division of responsibilities between Division 23 and 26 for furnishing or wiring this equipment is as follows:

1. Division 23 Mechanical Responsibilities:

a. MOTORS: Furnish and install all motors necessary for mechanical equipment.
b. MAGNETIC STARTERS: Furnish all magnetic starters whether manually or automatically controlled which are necessary for mechanical equipment. Furnish these starters with all control relays or transformers necessary to interface with mechanical controls. If the starter is factory installed on a piece of Division 23 equipment, also furnish and install the power wiring between starter and motor.
c. VARIABLE FREQUENCY DRIVES: Provide all VFD's associated with mechanical equipment. If the drive is installed on a piece of factory assembled equipment the wiring between motor and drive is to be provided as part of the factory equipment.
d. DISCONNECTS: Provide the disconnects which are part of factory wired Division 23 equipment. Factory wiring to include wiring between motor and disconnect or combination starter/disconnect.
e. CONTROLS: Division 23 Contractor (including the temperature controls subcontractor) is responsible for the following equipment in its entirety. This equipment includes but is not limited to the following:

1) Control relays necessary for controlling Division 23 equipment.
2) Control transformers necessary for providing power to controls for Division 23 equipment.
3) Line voltage thermostats.
4) Low or non-load voltage control components.
5) Remote bulb thermostats.
6) Non-life safety related valve or damper actuators.
7) Float switches.
8) Solenoid valves, EP and PE switches.
9) Refrigeration controls. (Division 26 provides power to refrigeration panels.)

f. FIRE AND LIFE SAFETY EQUIPMENT:

1) Fire/Smoke Dampers: Division 23 is responsible for providing and physically installing the damper and for installing any required control interface wiring to Division 23 controls.

a) Where fire/smoke dampers are part of an integrated smoke control system, Division 23 is responsible for providing dampers with necessary end switches for proof of closure. (See Section 233113.)

b) Where these dampers are not part of an integrated area wide smoke detection system, Division 23 is responsible for providing each fire/smoke damper with a dedicated duct detector installed per the requirements of the building code. (See Section 233113). If not integral with the damper assembly, the detector is to be installed by Div. 23 but wired for damper control by Div. 26.

2) Fire Sprinkler System: Division 23 is responsible for providing necessary controls including flow switches and alarm bells.

3) Specialized fire suppression systems: Division 23 is responsible for providing necessary system controls and any required control interface wiring to these controls. Division 26 is responsible for bringing power to point of connection with the system.

D. Division 26 has responsibilities for electrically powered or controlled mechanical equipment, which is specified in Division 23 Specifications or scheduled on Division 23 Drawings. The specific division of responsibilities between Division 23 and 26 for furnishing or wiring this equipment is as follows:

1. Division 26 Electrical Responsibilities:

a. MOTORS: Provide the power wiring for the motors.

b. MAGNETIC STARTERS: Except where magnetic starters are factory installed on Division 23 factory assembled equipment, Division 26 is to install magnetic starters furnished by Division 23 and install the necessary power wiring to the starter and from the starter to the motor. In the case of factory installed starters, Division 26 is to install the necessary power wiring to the starter.

c. VARIABLE FREQUENCY DRIVES: Physically mount all VFD's, which are not specified to be installed on Division 23 factory assembled equipment. Provide the necessary power wiring to the VFD and from the VFD to the motor except in the case of factory installed VFD's where wiring between the motor and VFD is to be by Division 23. Where disconnects are installed between a VFD and a motor provide the interlocking wiring between the disconnect and VFD to insure that the drive is shutdown simultaneously with motor.

d. DISCONNECTS: Provide all disconnects necessary for Division 23 mechanical equipment which are not provided as part of factory wired Division 23 equipment. Provide power wiring to all disconnects. In addition provide power wiring between motor and disconnect when the disconnect is not factory installed. See also Variable Frequency Drive above for special wiring requirements.

e. CONTROLS: Division 26 Contractor is responsible for providing power to control panels and control circuit outlets.

f. FIRE AND LIFE SAFETY EQUIPMENT:

1) Fire/Smoke Dampers: Division 26 is responsible for power wiring to the damper and as follows:

a) Where these dampers are part of an integrated smoke control system Division 26 is responsible for providing the detectors and

for all fire detection system wiring necessary to integrate dampers and related end switches into the system.

b) Where these dampers are not part of an integrated area wide smoke detection system, Division 23 is responsible for providing each fire/smoke damper with a dedicated duct detector installed per the requirements of the building code. (See Section 233113). If not integral with the damper assembly, the detector is to be installed by Div. 23 but wired for damper control by Div. 26.

2) Fire Sprinkler System: Division 26 is responsible for providing power wiring to fire protection controls including flow switches and alarm bells.

3) Specialized fire suppression systems: Division 26 is responsible for providing power wiring to suppression system and its controls.

2. Coordinate with other work, including wires/cables, raceway and equipment installation, as necessary to properly interface installation of electrical connections for equipment with other work.
3. Connect electrical power supply conductors to equipment conductors in accordance with equipment manufacturer's written instructions and wiring diagrams. Mate and match conductors of electrical connections for proper interface between electrical power supplies and installed equipment.
4. Maintain existing electrical service and feeders to occupied areas and operational facilities, unless otherwise indicated, or when authorized otherwise in writing by Owner, or Architect/Engineer. Provide temporary service during interruptions to existing facilities. When necessary, schedule momentary outages for replacing existing wiring systems with new wiring systems. When that "cutting-over" has been successfully accomplished, remove, relocate, or abandon existing wiring as indicated.
5. Cover splices with electrical insulating material equivalent to, or of greater insulation resistivity rating, than electrical insulation rating of those conductors being spliced.
6. Prepare cables and wires, by cutting and stripping covering armor, jacket, and insulation properly to ensure uniform and neat appearance where cables and wires are terminated. Exercise care to avoid cutting through tapes which will remain on conductors. Also avoid "ringing" copper conductors while skinning wire.

E. Motors and Motor Control Equipment: Conform to the standards of the NEMA. Equip motors with magnetic or manual line starters with overload protection. Motor starters and line voltage controls shall be installed under Electrical Section but located and coordinated as required under this Section of the work. Starters shall be combination type with non-fusible disconnect switches. All single phase fractional horsepower motors shall have built-in overload protection.

3.7 PAINTING

A. All painting shall be provided under this Division work, unless otherwise specified under Section 099100: Painting. Painting schemes shall comply with ANSI A13.1. Paint all exposed materials such as piping, ductwork, equipment, insulation, steel, etc. Exposed gas piping inside and outside the building shall be painted with two coats of "Rust-O-Leum" Yellow. The inside surface of visible ductwork above diffusers/grilles shall be painted flat black. Exposed copper indirect waste piping serving food service equipment shall be painted metallic chrome.

B. All exposed work under Division 23 shall receive either a factory finish or a field prime coat finish, except:

1. Exposed copper piping.
2. Aluminum jacketed outdoor insulated piping.

3.8 IDENTIFICATION MARKERS

A. General: Where identification is to be applied to surfaces which require insulation, painting, or other covering or finish, including valve tags in finished mechanical spaces, install identification after completion of covering and painting. Install identification prior to installation of acoustical ceilings and similar removable concealment.

B. Piping System Identification:

1. Install pipe markers on each system indicated to receive identification, and include arrows to show normal direction of flow.
2. Locate pipe markers as follows:

   a. Near each valve and control device.
   b. Near each branch, excluding short take-offs for fixtures and terminal units; mark each pipe at branch, where there could be question of flow pattern.
   c. Near locations where pipes pass through walls or floors/ceilings, or enter non-accessible enclosures.
   d. At access doors, manholes, and similar access points which permit view of concealed piping.
   e. Near major equipment items and other points of origination and termination.
   f. Spaced horizontally at maximum spacing of 20' along each piping run, with minimum of one in each room. Vertically spaced at each story transversed.

C. Underground Piping Identification: During backfilling/topsoiling of each exterior underground piping system, install continuous underground-type plastic line marker, located directly over buried line at 6" to 8" below finished grade. Where multiple small lines are buried in common trench and do not exceed overall width of 16", install single line marker.

D. Ductwork Identification: A minimum of every 20' for all ductwork 12" or more in diameter or width.

E. Mechanical Equipment Identification: Locate engraved plastic laminate signs on or near each major item of mechanical equipment and each operational device. Provide signs for the following:

1. Main control and operating valves, including safety devices.
2. Meters, gauges, thermometers, and similar units.
3. Pumps, compressors, chillers, and similar motor-driven units.
4. Hot water system mixing valves and similar equipment.
5. Boilers, heat exchangers and similar equipment.
6. Fans, blowers, primary balancing dampers, and mixing boxes.
7. Packaged HVAC central-station and zone-type units.
8. Tanks and pressure vessels.
9. Strainers, filters, treatment systems and similar equipment.
10. Sprinkler and standpipe equipment.

F. Text of Signs: In addition to name of identified unit, provide lettering to distinguish between multiple units, inform operator of operational requirements, indicate safety and emergency precautions, and warn of hazards and improper operations. Equipment signs shall include an identification of the area or other equipment served by the equipment being labeled.

3.9 VIBRATION AND DYNAMIC BALANCING

A. Vibration tolerances shall be as specified by the “International Research and Development Corporation”, Worthington, Ohio, measured by the displacement, peak to peak, as follows:

1. All Fans: Below severity chart labeled “FAIR”, maximum velocity of 0.0785 in/sec, peak.
2. Pump and Electric Motors: Below severity chart labeled “SLIGHTLY ROUGH”, maximum vibration velocity of 0.157 in/sec, peak.

3. Compressors: Same as pumps.

B. Correction shall be made to all equipment, which exceeds vibration tolerances specified above. Final vibration levels shall be reported as described above.

3.10 TESTING

A. Provide all tests specified hereinafter and as otherwise required. Provide all test equipment, including test pumps, gauges, instruments, and other equipment required. Test all rotational equipment for proper direction of rotation. Upon completion of testing, certify to the Architect, in writing, that the specified tests have been performed and that the installation complies with the specified requirements and provide a report of the test observations signed by qualified inspector.
B. Ductwork: Test all air quantities as specified in Section 230593 - Testing, Adjusting and Balancing. Pressure tests per SMACNA.
C. Registers and Diffusers: Test for proper operation of manually operated control feature. Test all air quantities as specified in Section 230593 – Testing, Adjusting and Balancing.
D. Ductwork Specialties: Test all operable ductwork specialties for proper operation. Check all fire, smoke and fire/smoke dampers to ensure that they are 100% open.
E. Temperature Control: Test all control functions to assure that all systems are controlling as specified or as otherwise necessary and that all controls are adjusted to maintain proper room temperatures. The manufacturer's representative shall perform all tests.

END OF SECTION

SECTION 23 05 29 - VIBRATION AND SEISMIC CONTROLS FOR HVAC PIPING AND EQUIPMENT

PART 1 - GENERAL

1.1 DESCRIPTION OF WORK

A. The requirements of Section 23 05 13 apply to all Work of Division 23.
B. Work in this Section includes, but is not necessarily limited to, furnishing all labor, materials, and equipment for the installation of vibration isolation mounts, brackets, base frames where required, seismic restraints, flexible connectors, pipe isolation hangers, and ductwork isolation hangers. The installation shall be complete in every respect, tested, and adjusted to be in excellent working order.

1.2 RELATED WORK SPECIFIED ELSEWHERE

A. Isolated HVAC Equipment including (but not limited to) Air handlers, Fans, Pumps, Boilers, Chillers, Piping, Ductwork.
B. Internally-isolated Equipment.
C. Plumbing Equipment including (but not limited to) Pumps, Piping.
D. Electrical Equipment including (but not limited to) Transformers, Dimmers, Buses.
E. Concrete for equipment bases (housekeeping pads) and inertia blocks.
F. Flexible electrical connections to motors and vibrating equipment.
G. Flexible duct connections to fans and other vibrating elements.
H. Pipe suspension systems, connectors and couplings.

1.3 GENERAL REQUIREMENTS FOR THE MANUFACTURER

A. Equipment: Provide vibration isolators, base frames, inertia bases and seismic restraints of sufficient size and distribution to assure that deflection, stability and seismic restraint requirements are met. For typical units, no fewer than four isolators shall be provided. Isolators shall be provided to deflect uniformly under operating gravity and equipment thrust loadings to within ±10% of specified deflection values.
B. Specific Equipment: Specific manufacturer's equipment items are listed in this specification. All current and complete requirements from the listed manufacturer of these items shall be integral to this specification, unless such requirements conflict with requirements herein.
C. Instructions to the Design-Builder:
   1. Provide written installation instructions to the Design-Builder.
   2. Provide a visit or visits to the jobsite before equipment is installed for the purposes of instruction. During the visit the manufacturer will inspect intended equipment locations and instruct installers in correct equipment installation procedure and sequence.

D. Final Inspections: Provide a visit or visits to the jobsite after equipment is installed for the purposes of inspection. Identify all improperly installed vibration isolation equipment and instruct the Design-Builder in corrective work.

1.4 GENERAL REQUIREMENTS FOR THE DESIGN-BUILDER

A. Short-Circuiting: Rigorously avoid short-circuiting to the building any vibration-isolated piece of equipment, pipe, duct or other component. Short-circuits with or via rigid conduits, drain lines, rigid braces, rigid sleeves, framing, etc. all shall be avoided. The Design-Builder shall oversee trades to prevent the short-circuiting of any vibration isolation system and shall bring any unresolved conflicts to the Campus Project Manager (CPM)'s attention.

B. Extra Parts: Supply and install any incidental equipment or parts needed to meet the requirements stated.

C. Package Units: Where equipment within Package Units is provided with separate isolators by the equipment manufacturer and the package enclosure is scheduled to be on an isolator assembly, the internal isolators shall be removed or permanently blocked and the isolated components they supported shall be rigidly attached to the enclosure.

D. Post-Installation Inspection and Adjustment:

1. After the installation of each item of equipment is complete and under full operational load, vibration isolators shall be adjusted so that loads are transferred to them and away from temporary blocking washers and shims. Blocks and shims then shall be removed and used as gauges to judge required clearances. Washers shall be moved away.
2. Inspect all vibration-isolated equipment, coordinate the work of all involved trades, and see that vibration isolators are not short-circuited by seismic restraints, drain lines, conduits, stanchions, control tubing, duct connections, pipe connections, etc. Ensure hanger isolators and their rods or wires do not touch any other building component.
3. Obtain "rough-in" inspection and approval from the Campus Project Manager (CPM)'s of any installation to be covered or enclosed, prior to such closure.
4. Schedule final inspection(s) by the equipment Manufacturer after installation as required in Section 1.03.E. Obtain "rough-in" inspection by the Manufacturer of any installation to be covered or enclosed, prior to such closure.

E. Response to Punchlists: Upon completion of the work, the Campus Project Manager (CPM)'s will carry out an inspection of the project and of final project record documents and will inform the installing contractor via punchlists of any further work that must be completed. Correct, at no additional cost to the District, all installations that are deemed defective in workmanship or materials by the Campus Project Manager (CPM).

1.5 MATERIAL REQUIREMENTS

A. Design Life: Bases, vibration isolation equipment, and seismic restraint equipment shall be capable of surviving the life of the equipment served.

1. All materials, components and parts shall be new.
2. All metal parts of vibration isolators to be installed out of doors shall be hot-dip galvanized after fabrication. Galvanizing shall comply with ASTM A 123, A 153, and A 386 as applicable.

B. Springs: Springs shall be so selected and installed that the ratio of spring diameter to final compressed height shall be no less than 0.8 and no more than 1.2. Further, each spring shall have a minimum additional travel to solid equal to 50% of its actual deflection.

C. Neoprene Elements: All elastomeric mounts, pads, bushings, sleeves, grommets, washers, etc., shall have a Shore-A hardness of 30 to 50 durometer after minimum aging of 20 days or corresponding oven-aging.

D. Bases: For equipment that is not constructed with a base structure compatible with vibration isolation mounts, a base frame shall be supplied with the isolators. A base frame shall also be supplied where an item or equipment and its drive motor require a common rigid base.

E. Seismic Restraints: Seismic restraints shall resist a seismic acceleration in any direction in accordance with all relevant codes without damage or deformation to equipment, building or mounts. Restraints shall not short-circuit vibration isolators during normal operation. Generally, there shall be as many seismic restraints as there are vibration isolators on a piece of equipment. Restraints and isolators shall be located close together on equipment or frames.

1.6 SPEED AND BALANCE REQUIREMENTS FOR ROTATING EQUIPMENT

A. Speed Limits: Fans and other rotating mechanical equipment shall not operate at speeds in excess of 80% of their true critical speed.
B. Balancing: Rotating devices such as fans shall be balanced according to the schedule below. The following maximum velocity levels (measured in all directions at the fan bearing(s)) shall not be exceeded when the equipment is floating freely on the scheduled vibration isolators:

Equipment	Velocity, in/s (rms)
Fans	0.09
Pumps	0.13
Centrifugal Compressors	0.13

C. Remedial Work: Should any rotating equipment cause excessive noise or vibration, the Design-Builder shall be responsible for rebalancing, realignment, or other remedial work required to reduce noise and vibration levels. Excessive is defined as exceeding the manufacturer's specifications for the unit in question or exceeding the above displacement values.

1.7 CONSTRUCTION SUBMITTALS

A. Compliance: Comply with the requirements of the General Conditions Section.
B. Specifications: Submit Manufacturer's specifications and other data needed to prove compliance with all specified requirements.
C. Installation Instructions: Submit Manufacturer's recommended installation instructions and procedures.

1. Written instructions and checklists to be delivered to the Design-Builder to aid in proper installation of manufacturer's equipment.

D. Schedules and Shop Drawings: Submit schedules and large scale Shop Drawings clearly showing all pertinent data including, but not limited to:

1. Schedule: Submit a schedule indicating tag number, location and type of all vibration isolators. This shall be sufficiently clear to suffice as a checklist and index for information outlined below.
2. Design Tabulation: Submit a complete tabulation showing for each vibration isolator:

a. Design load.
b. Static deflection expected under the design load.
c. Specified minimum static deflection.
d. Additional deflection to solid under design load.
e. Ratio of spring height to spring diameter under design load.

3. Details: Submit details of seismic restraints, steel brackets, steel rails, steel base frames, and concrete inertia bases showing all steel work, reinforcing, and vibration isolator and seismic restraint mounting attachment methods.
4. Galvanization: Submit certified statement by the galvanizer at the time of shipment indicating that outdoor equipment conforms with all ASTM specifications.

E. Structural Requirements: Submit the following:

1. Seismic Restraint: Submit calculations by a structural engineer licensed in the state in which the building is to be erected, certifying that all seismic restraints, bolts,

cables and associated components will conform with all pertinent seismic- related requirements.

2. Thrust Restraint: Submit calculations for required thrust restraint of each fan. Calculations to be based on Mason Industries Data Sheet DS-207.

F. Exceptions: Identify all proposed changes, differences and/or discrepancies, including verbiage, terms and definitions between Contract Documents and submittals.

G. Samples: Submit samples of any or all proposed equipment at no charge to the District.

H. Detrimental Field Conditions: Submit a list of all field conditions which the manufacturer has determined will limit the specified operational performance requirements specified for isolation devices.

I. Contract Closeout: At completion of installation, submit the following documents. Submission of these documents must be complete before final acceptance of vibration isolation systems is given. Assistance from the vibration isolation equipment Manufacturer may be required.

1. A complete tabulation showing for each vibration isolator: (a) the actual static deflection measured at the project and (b) the specified minimum static deflection.
2. A report certifying a) that each piece of operative rotating mechanical equipment does not exceed the specified vibration displacement level and b) that each piece of isolated equipment or equipment component (ducts, pipes, conduit, etc.) is not short-circuited by any means and c) that the requirements of section 2.00 are satisfied for all equipment.

1.8 QUALITY ASSURANCE

A. Manufacturer's Responsibility: A single firm shall be responsible for the design, fabrication and delivery of vibration isolation equipment, including all components and seismic restraints.

B. Manufacturer's Experience: The Manufacturer shall have successful experience in vibration isolation and seismic control equipment fabrication, including no less than five years experience in fabrication and delivery of equipment equal in quantity or complexity to this work.

C. Structural Certification: The seismic resistance capability of all equipment shall be certified by a registered professional structural engineer in the state of California. The requirements of the California Building Code, Chapter 16A and all other applicable local codes shall be met.

1.9 PRODUCT DELIVERY, STORAGE AND HANDLING

A. Comply with pertinent provisions of Division 01.

B. Protect equipment during transit, storage and handling to prevent damage and deterioration. Comply with requirements of manufacturer's instructions.

1. Package equipment at factory prior to shipping using manufacturer's standard method.

C. Identify each base or vibration isolation or seismic restraint item with individual tag numbers which correlate with the equipment tag system used on shop drawings.

1.10 WARRANTY

A. Bases, vibration isolation equipment, and seismic restraint equipment shall be warranted against defective workmanship, operation and materials for the life of the equipment supported by these items.

PART 2 - PRODUCTS

2.1 ACCEPTABLE MANUFACTURERS

A. Mason Industries Inc., Los Angeles, California Mason
B. Kinetics Noise Control Inc., Dublin, Ohio Kinetics
C. M. W. Saussé and Co., Valencia, California Saussé

2.2 VIBRATION ISOLATION MATERIALS

A. Note: The listing of a Manufacturer's product in sections below does not certify that it fully complies with these specifications. All modifications of a listed product required to bring it into compliance with these specifications shall be indicated in submittals and made prior to jobsite delivery.
B. Mount P1: Neoprene Pad(s) and Bearing Plate(s): Neoprene pad shall be ribbed or waffled, 5/16 to 1/2 inch thick, 40 durometer, with a minimum 1/16-inch-thick steel bearing plate on top. Size pad and bearing plate to receive 60 psi load. Provide single or multiple pads and plates in series as specified, with 1/16-inch-thick steel shim between layers. Provide "W + plate(s) or WM" by Mason, "NPD + plate(s) or NGD" by Kinetics or equal.
C. Mount P2: Extra Thick Neoprene Pad(s) and Bearing Plate(s): Neoprene pad shall be waffled, 3/4 inch thick, 30 or 40 or 50 durometer, as scheduled, with a minimum 1/16-inch thick steel bearing plate on top. Pad areas shall be selected so no more than 15% and no less than 10% deflection occurs due to the supported load. Provide single or multiple pads and plates in series as specified with 1/16-inch-thick steel shim between layers. Provide "Super W + plate(s) or SWM" by Mason or equal.
D. Mount P3: Neoprene Bushing for Bolt Holes in Pads: Bushings shall be minimum 3/16" thick in all places and maximum 40 durometer. Provide steel washer to distribute bolt head loads to bushing. Provide bushings by Mason or equal.
E. Mount B1: Neoprene Mount: Neoprene isolators shall be double-deflection neoprene-in-shear type with steel-reinforced base. All metal surfaces shall be covered with neoprene. The top and bottom surfaces shall be ribbed. Bolt holes shall be supplied in the base and the top shall have a threaded fastener. Neoprene no harder than 50 durometer. Provide "ND" by Mason, "RD" by Kinetics or equal.
F. Mount B2: Unhoused Spring: Springs shall be designed and installed so their ends are parallel before and after installation and during equipment operation. All mounts shall have equipment leveling bolts. Each isolator shall have a steel base plate with mounting bolt holes and a ribbed or waffled neoprene friction pad permanently adhered to the bottom. The pad shall be 5/16 to 1/2 inch thick, 40 durometer hardness, and sized for a load of 60 psi. Provide "SLFH" by Mason, or "FDS" by Kinetics or equal.
G. Mount B2VTL: Spring with Seismic Restraint and Vertical Travel Limit: Same as Mount B2 with the addition of steel columns on either side of the spring to provide seismic restraint and accommodate vertical travel limit stops. Mount shall resist a seismic acceleration in any direction of at least 0.5 G or as required by the relevant codes. Travel limit stops shall be capable of serving as blocking during erection of the equipment. A minimum clearance of 1/4 inch shall be maintained around restraining bolts and between the limit stops and the spring so as not to interfere with the spring action. Each isolator assembly shall have a friction pad of ribbed or waffled neoprene permanently adhered to the bottom. The pad shall be 5/16 to 1/2 inch thick, 40 durometer hardness, and sized for a load of 60 psi. Provide "SLR" by Mason, "FLS" by Kinetics or equal.
H. Hanger H1: Neoprene Hanger: Vibration isolation hangers shall consist of a double-deflection neoprene-in-shear element contained in a steel housing. It shall be formed with a projecting neck bushing for the hole in the hanger housing that will prevent metal-to-metal contact between the hanger rod and the housing. The diameter of the hole in the housing shall be sufficient to permit the hanger rod to swing through a 30o arc before contacting the hanger housing. Neoprene shall be no harder than 50 durometer. Provide "HD" by Mason, "RH" by Kinetics or equal.

I. Hanger H2: Standard Spring Hanger: Vibration isolation hangers shall contain a laterally-stable steel spring set in a neoprene cup manufactured with a bushing to prevent short-circuiting of the hanger rod as it passes through the hanger housing. The cup shall contain a steel washer designed to properly distribute the spring load on the neoprene and prevent its crushing. Spring diameters and hanger housing lower hole sizes shall be large enough to permit the hanger rod to swing through a 30o arc before contacting the housing. Neoprene cup shall be minimum 1/4 inch thick and maximum 50 durometer. Provide "30" by Mason or equal.

J. Hanger H3: Pre-compressed Spring Hanger: Vibration isolation hangers shall be the same as Mount H2 but shall be delivered pre-compressed to their planned installed deflection to keep pipes or equipment steady during installation. Hangers shall be designed with a slow-release mechanism to free the spring after installation is complete and the spring is fully loaded. Great care shall be taken to see that all springs are free to oscillate 0.25". Deflection shall be clearly indicated by means of a scale. Provide "PC30" by Mason or equal.

K. Curb C1: Standard Vibration Isolation Curb: Vibration isolation curb shall be a prefabricated assembly consisting of an extruded aluminum frame and spring vibration isolation system. The aluminum frame shall be sufficiently rigid to support the equipment load without detrimental deflection. Frame and spring connections to include resilient snubbing to resist wind and seismic forces. Spring isolators shall be selected and positioned along the two long sides of curb no closer than 7' apart to achieve the minimum static deflection called for in the schedule. The static deflection of each individual isolator shall differ from the other by no more than 10%. Galvanizing requirements shall apply to each spring used in the curbs. Provide "CMAB" by Mason, "KSR" by Kinetics or equal.

2.3 BASE MATERIALS

A. Base BS1: No Frame Required for Floor Mounting: This base mounting method shall be used only with small pieces of equipment that have an integral casing or base frame that is adequately strong to be supported directly on vibration isolators without deforming the casing or frame or affecting equipment or isolator operation to any significant or noticeable extent. Place vibration isolators directly under equipment or connect steel height-saving brackets to the sides of the equipment and place isolators under brackets. Equipment manufacturer shall approve such mounting.

B. Base BS2: Steel Frame for Floor Mounting: Steel frames for floor-mounted equipment shall consist of structural steel sections sized, spaced, and connected to form a rigid base that will not twist, rack, deform, or deflect in any manner that will negatively affect the equipment or isolation mounts. Frames shall be adequately sized to support basic equipment units and motors plus any associated pipe elbow supports, duct elbow supports, electrical control elements, or other components closely related and requiring resilient support in order to prevent vibration transfer to the building structure.

C. Frames may be rectangular or tee-shaped in plan. The depth of steel frame base members shall be minimum one-tenth the longest dimension of the base. Frame bases shall include side-mounting height-saving brackets for attachment to vibration isolators. Provide "WF" by Mason, "SFB" by Kinetics or equal.

D. Base BS3: Inertia Base for Floor Mounting: Concrete inertia bases for floor-mounted equipment shall be formed of stone-aggregate concrete (150 lb/cu ft) and appropriate steel reinforcing cast between perimeter structural steel sections. Inertia bases shall be built to form a rigid base that will not twist, rack, deform, deflect, or crack in any manner. Inertia bases shall be adequately sized to support basic equipment units and motors plus all attached equipment requiring resilient support in order to prevent vibration transfer to the building structure. Inertia base thickness shall be minimum one-twelfth the longest base dimension but not less than 8 inches. Inertia bases shall include side-mounting, height-saving brackets for attachment of vibration isolators. Minimum clearance between bottom of base and structure beneath must be either 2" or 3% of the shorter base dimension, whichever is greater. The steel frame and reinforcement shall be supplied by the vibration isolator manu-

facturer. Concrete shall be provided and poured by the Design-Builder on site. Provide "K" by Mason, "CIB" by Kinetics or equal.

2.4 SEISMIC RESTRAINT MATERIALS

A. Restraint EQR1: Floor-Mounted Restraint: Separate earthquake restraints shall be provided for all floor-mounted equipment on vibration isolation mounts that do not include seismic restraint housings. Provide a minimum of four all-directional earthquake restraints that are located as close to the vibration isolators as possible to facilitate attachment to both the equipment base and the structure. The restraints shall consist of interlocking steel members restrained by a shock-absorbent neoprene bushing. Bushing shall be a minimum of 1/4 inch thick. Restraints shall be manufactured with an air gap between hard and resilient material of 3/16 to 1/4 inch. Snubbers shall be installed with factory-set clearances. Snubber end shall be removable to allow inspection of internal clearances. Restraints shall comply with the requirements of the most recent version of the Uniform Building Code and shall resist a seismic acceleration in any direction of at least 0.5 G without damage to themselves, the building or the equipment. Provide "Z-1011 or Z-1225" by Mason or equal.

B. Restraint EQR2: Slack Cable Restraint: Provide slightly slack steel cables of appropriate sizes and lengths and with appropriate fittings and anchorages for all isolated ceiling-suspended equipment, all isolated roof-mounted equipment, and all isolated pipes and ducts. Hanger rods shall be reinforced against upward vertical loads where required. Cable systems shall be designed to comply with the requirements of the most recent version of the Uniform Building Code and shall resist a seismic acceleration in any direction of at least 0.5 G without damage to themselves, the building or the equipment. Use seismic restraint cables as engineered and fabricated by A/B, Mason or equal.

2.5 THRUST RESTRAINT MATERIALS

A. Restraint TR1: Neoprene Restraint: Thrust restraint shall be custom fabricated using a Type B1 neoprene-in-shear isolator and a steel angle. Neoprene isolator bolted to one angle leg opposes equipment thrust; second angle leg bolted to appropriate structure. The steel angle shall be sufficiently rigid and the mounting sufficiently sized and secure to resist the lateral movement of equipment during on-off cycle.

B. Restraint TR2: Steel Spring Restraint: Thrust restraint shall consist of a spring element in series with a neoprene cup. The unit shall be designed to have the same deflection as specified for the base mountings or hangers supporting the equipment. The spring element shall be adjusted in the field to allow for a maximum of 1/4-inch movement during starting or stopping of the equipment. The assembly shall be furnished complete with rods and angle brackets for attachment to both the equipment and the adjacent fixed structural anchor. Provide "WBI or WBD" by Mason or approved equal.

2.6 PIPING ISOLATION MATERIALS

A. Connector FPC: Flexible Pipe Connectors: Flexible pipe connectors shall be fabricated of multiple plies of nylon cord, fabric, and neoprene, vulcanized so as to become inseparable and homogeneous. Straight connectors shall be formed into a double sphere shape. Elbow connectors shall have a single sphere shape at the curve of the unit. Flexible connectors shall be able to accept compressive, elongating, transverse, and angular movements. Flexible connectors shall be selected and specially outfitted if necessary to suit the system temperature, pressure, and fluid type. Connectors for pipe sizes 2 inches and smaller shall have threaded female union couplings on each end. Larger sizes shall be fitted with metallic flange couplings. Control cables shall be provided if required. Provide "MFDEJ” or “SFDEJ" by Mason or approved equal.

B. Anchor RPAG: Resilient Pipe Anchor or Guide: These units shall be the standard product of the vibration isolation mounting manufacturer, incorporating neoprene isolation elements that are specifically designed for providing resilient vertical and/or horizontal support when

serving as a pipe anchor or guide. Minimum neoprene thickness 1/2 inch. Maximum neoprene durometer 50. Provide "ADA/GDA" by Mason, "RSF" by Kinetics or approved equal.

C. Sleeve RPS1: Resilient Pipe Sleeve at Support or Construction Penetration: Sleeve shall consist of a formed and stiffened galvanized steel sleeve lined on the inside with moisture and vermin resistant felt bonded to the metal sleeve and 1/2 inch thick. Sleeve inside diameter shall equal pipe outside diameter in each application. Sleeve shall be split longitudinally so it can be snapped over pipes and reclosed without damage. Sleeve lengths shall be as recommended by the manufacturer for the given diameters, but shall not be less than 3 inches. Provide "PRIsolator" by Porter-Roemer, "Trisolator" by Stoneman Engineering or approved equal.

D. Sleeve RPS2: Resilient Pipe Sleeve at Construction Penetration: This unit shall consist of two bolted pipe halves with 3/4 inch or thicker neoprene sponge bonded to the inner faces. The seal shall be tightenable around the pipe to eliminate clearance between the inner sponge face and the piping. Sleeve shall be 2 inches longer than the thickness of the construction it penetrates. Where pipe temperatures exceed 240oF, use 10-pcf-density glass fiber insulation in lieu of sponge neoprene. Provide "SWS" by Mason, "PS-1-D" by Kinetics or approved equal.

E. Hanger FLCH: Clevis Hanger with Felt Lining. The felt material shall be a minimum 1/4" thick and shall extend above the center-line of the suspended pipe. The felt material shall withstand a maximum temperature of 650 degrees F. The finish of the hanger shall be as specified for other clevis hangers utilized for the plumbing piping system. The isolator shall be Tolco "Clevis Hanger with Felt Lining" or approved equal.

2.7 FLEXIBLE DUCT CONNECTOR MATERIALS

A. Flexible duct connectors shall be woven fiber-glass fabric material with a minimum weight of 24 oz./sq. yd. Connectors shall be minimum of 4-inches long and allow 1-inch of slack at connections. Flexible duct connectors shall have metal collar frames at each end of connections. Flexible Duct Connectors shall be Duro Dyne Durolon or equal.

2.8 FLEXIBLE ELECTRICAL CONNECTOR MATERIALS

A. Make flexible electrical connections to all vibrating equipment so as to prevent any vibration transfer to the building.

1. Alternate A: Employ flexible electrical conduit installed grossly slack.
2. Alternate B: Employ flexible expansion/deflection conduit couplings sized for the application (1- to 6-inch diameters available). Coupling to have flexible and watertight outer jacket, inner grounding strap, flexible plastic inner sleeve to maintain smooth wire-way, and end hubs with threads to fit standard threaded metal conduit. Coupling shall be "XD Xpansion/Deflection Coupling" by Crouse-Hinds of Syracuse, New York, or "Type DF Expansion and Deflection Fitting" by Spring City Electrical Mfg. Co. of Spring City, Pennsylvania.

2.9 CUSTOM RESILIENT AND AIRTIGHT SLEEVE MATERIALS

A. Sleeve shall be custom-fabricated. It shall be formed from pipe or sheet metal that is 1 inch larger in each cross-sectional dimension than the penetrating element and is 2 inches longer than the thickness of the construction penetrated. The annular space between the sleeve and the penetrating element shall be packed tightly with long-fiber glass fiber of 2- to 3-pcf density to within 1/2 inch of the ends of the sleeve. The remaining 1/2-inch space at each end shall be filled completely with acoustical sealant to form an airtight seal. Glass fiber packing by CertainTeed, Manville, or Owens-Corning. Acoustical Sealant by DAP, Tremco or U.S. Gypsum, choice depending on application and as approved by Campus Project Manager (CPM)'s.

2.10 SEISMIC RESTRAINT FOR DUCTWORK

A. Ductwork shall be supported and braced to resist all directional (transverse, longitudinal and vertical) forces.
B. Brace rectangular ducts with cross sectional areas of six square feet and larger. Brace round ducts with diameters of 28 inches and larger.
C. Provide required bracing material.
D. Provide one of the following options:

1. Design and installation to meet the criteria listed above, and meet requirements of the latest Sheet Metal and Air Conditioning Contractors National Association (SMACNA), Seismic Restraint Manual Guidelines for Mechanical Systems for the prescribed Seismic Hazard Level (SHL) A, September 1998 with 2000 addendum 1.
2. Design and installation to meet the criteria listed above, and meet the most current requirements of the National Uniform Seismic Installation Guidelines (NUSIG). Submit all design tables and information for the design force levels, stamped and signed by a California registered professional engineer.
3. Where SMACNA or NUSIG requirements are not met completely, submit proposed alternate details and calculations to completely address seismic bracing requirements. Such designs shall use the California Building Code requirements for determining seismic forces, and be performed, stamped and signed by a California registered professional structural engineer.

PART 3 - EXECUTION

3.1 GENERAL REQUIREMENTS PRIOR TO INSTALLATION:

A. Prior to installation of vibration isolators, frames, guides, seismic restraints and related materials, the following conditions shall be met:

1. All submittals for equipment shall be approved by the Campus Project Manager (CPM)’s.
2. Written and oral instructions from the vibration isolation equipment Manufacturer shall be obtained.
3. Any conflicts between trades resulting in unavoidable rigid contact of vibrating equipment piping or ductwork due to inadequate space or other unforeseen conditions shall be brought to the Campus Project Manager (CPM)'s attention. If these conflicts are not resolved before installation, all corrective work shall be at the Design-Builder's expense.
4. Any discrepancies between the specifications and field conditions or any changes due to specific equipment selection shall be brought to the Campus Project Manager (CPM)'s attention. If these discrepancies are not resolved before installation, all corrective work shall be at the Design-Builder's expense.

3.2 GENERAL REQUIREMENTS FOR INSTALLATION

A. Furnish and install vibration isolators, bases, seismic restraints and related materials and insure the following:

1. No mechanical equipment or piping shall make rigid contact with the "building" unless it is approved in this specification or by the Campus Project Manager (CPM)’s. "Building" includes, but is not limited to: roofs, floors, beams, columns, walls, partitions, ceilings, studs, ceiling framing and suspension systems. Space all vibration-isolated equipment and isolated components and all vibration isolators (including rods and

wires) so as to be entirely free of any contact with any building element in any reasonable operating position.

2. The installation or use of vibration isolators shall not cause any change of position of equipment or piping or ducts that results in stresses in any connections or misalignment of shafts or bearings. In order to meet this objective, equipment, piping, and ducts shall be maintained in a rigid position during installation. The load shall not be transferred to the isolators until the installation is complete and in operational condition.
3. No equipment unit shall bear directly on or be suspended from vibration isolators or brackets unless its own frame or casing is suitably rigid to span between isolators without any significant or noticeable deformation and such support is approved by the manufacturer.
4. All rigidly- or resiliently-installed equipment, piping and ducts shall be capable of resisting seismic input from the building in any direction without damaging the building, equipment or mounting system.

3.3 INSTALLATION OF ROOFTOP- MOUNTED EQUIPMENT

A. Provide vibration isolation and seismic restraint for base-mounted equipment as scheduled and per all instructions in this specification.
B. Unless otherwise shown or specified, all base-mounted equipment shall be set on 4-inch thick, hard-rock concrete housekeeping pads. Vibration isolators and seismic restraints shall be bolted to the housekeeping pad. The pad dimensions shall exceed the equipment footprint (including floor mounts) by at least 24" in each direction (i.e. 12" per side).
C. Unless otherwise indicated, a minimum clearance of 1 inch shall be provided between the top of a housekeeping pad or floor or roof and the underside of an equipment unit or steel base frame that is vibration-isolated. The minimum clearance where a concrete inertia block is used shall be 2" or 3% of the base's smaller dimension, whichever is larger. This space shall be cleaned thoroughly of all dirt and debris.
D. For isolation equipment (Mounts B2 and B2VTL) with neoprene pads bearing directly on structure, fasten the isolator base plates to the building structure with suitable bolts. Isolate steel bolts from steel base plates with neoprene bushings or washers and sleeves (Mount Type P3) minimum 1/4 inch thick and maximum 40 durometer hardness. Provide steel washers to distribute bolt head loads to neoprene bushings or washers below. Size bolt holes in isolator bases to account for neoprene bushings or sleeves.
E. All bases for pumps shall be of sufficient area to support any required pipe stanchions below pipe elbows.
F. Bases for boilers shall be of sufficient area to support draft fans, if included.
G. Fans and pumps and their respective motors shall always be mounted on a common base.
H. Wind loads shall be accounted for in rooftop installations, including appropriate snubbers and slack-cable restraints.
I. Vibration isolation curbs shall be made weather-tight by sealing with flexible aluminum flashing or closed-cell neoprene or flexible vinyl all around the periphery. This weatherproofing shall in no way inhibit the vibration isolation of the spring elements. A closed-cell sponge gasket shall be provided between the equipment unit and the curb to form a weather-tight seal.

3.4 INSTALLATION OF CEILING- AND ROOF-SUSPENDED EQUIPMENT

A. Provide vibration isolation and seismic restraint for suspended equipment as scheduled and per all instructions within this specification.
B. Ceiling- or roof-suspended equipment shall be supported from the heaviest possible structure, such as trusses, girders, beams, or joists. If necessary, provide heavy extra substructure between the building's existing heavy structure in order to support vibration-isolated equipment. Connect vibration isolation hangers directly to, or as close as possible to, heavy structure.

C. Hanger rods shall be aligned and free of contact with hanger boxes.
D. Fans and their respective motors shall always be suspended on a common, stiff frame.

3.5 INSTALLATION OF SEISMIC RESTRAINTS

A. Size, select, and install all seismic restraints so as to resist seismic forces from the building in any direction without damage to equipment, isolators, restraints, or building. Restraints shall not short-circuit vibration isolators during normal operation. Restraints shall comply with Chapter 16, Section III, Earthquake Design, in the latest version of the California Building Code and all other applicable local codes.
B. One seismic restraint shall be provided for each vibration isolator supporting floor- or roof-top-mounted equipment, pipes or ducts.
C. Seismic restraint cables shall be provided for all vibration isolated ceiling or roof-suspended equipment, pipes or ducts. Adjust cables with care to handle required forces but do not short circuit isolation.
D. Hanger rods supporting ceiling or roof-suspended equipment shall be reinforced by cross-bracing or sleeves to resist lateral and upward vertical seismic loading.
E. All vibration isolators, seismic restraints, springs with seismic restraint housings, and seismic restraint cables shall be suitably secured to appropriate structure so that the fastenings and structure can handle the seismic load.

3.6 INSTALLATION OF THRUST RESTRAINTS

A. Provide horizontal thrust restraints as scheduled for fans delivering large air quantities and with a tendency to rock back on their spring mounts. Install thrust restraints parallel to the axis of air delivery and in pairs on opposite sides of the fan.

3.7 INSTALLATION OF RESILIENT DUCT SUPPORTS

A. Provide resilient support of ducts in locations and on isolators as scheduled and/or as shown on the drawings. Provide seismic restraints for ducts and their suspension systems.

3.8 INSTALLATION OF RESILIENT PIPE SUPPORTS

A. Unless otherwise specified, provide resilient support for all HVAC and plumbing water pipes throughout the building. No such piping is to come into rigid contact with the building.
B. Where "piping systems" are required to be vibration-isolated in a certain room or for a certain distance from an equipment unit, "piping systems" shall include all pipes, valves, strainers, tanks, converters, and other connected hardware.
C. Support all piping in mechanical equipment rooms on Type B2 or H2 or H3 springs sized for minimum 1-inch static deflection, unless otherwise noted.
D. Support on vibration isolators all piping outside of mechanical equipment rooms which is connected to and within a 30-foot radius of a vibration-isolated piece of equipment. If the piece of equipment is supported on neoprene isolators, support pipes on Type B1 or H1 isolators sized for minimum 0.35-inch deflection. If the piece of equipment is supported on spring isolators, support pipes on Type B2 or H2 or H3 springs sized for minimum 1-inch deflection.
E. Throughout the rest of the building not covered in B or C above, use RPS1 resilient pipe sleeves for support. An alternate to this is 1-inch-thick, 10-pcf-density glass fiber pipe insulation with suitable bearing plates to prevent crushing of insulation and without any steel pin or other rigid connection from plate to pipe through insulation.
F. Provide Type RPS1 or RPS2 or Custom resilient pipe sleeves wherever pipes penetrate construction.
G. Provide Type RPAG resilient pipe anchor/guide where anchors and/or guides are required in horizontal and vertical piping. Connect RPAG units to heavy structure only.
H. Release restraining washers and nuts in order to "free" all pre-compressed spring hangers.

3.9 INSTALLATION OF RESILIENT PIPE CONNECTIONS TO EQUIPMENT

A. Piping connected to vibration-isolated equipment shall be installed so that it does not strain or force out of alignment vibration isolators supporting either the equipment or the piping. To facilitate such connection, any flexible connector approved by the Campus Project Manager (CPM)'s is acceptable.
B. Where specifically scheduled and located, provide Type FPC flexible pipe connectors.

3.10 INSTALLATION OF RESILIENT DUCT CONNECTIONS TO EQUIPMENT

A. Provide flexible connections between ducts and all vibrating equipment (including supply and return duct connections at air-handling units and fan coil units). Flexible connectors shall be minimum 4-inches long and allow 1-inch slack at connections. Use woven fiberglass fabric material as indicated above unless loaded vinyl is specifically scheduled.
B. Align sheet metal duct with fan or fan casing opening in all three dimensions prior to installation of flexible connection so that duct and opening nearly coincide and are almost equally spaced 3 inches from one another all around. Do not install flexible connection until above requirements are met. Fans or fan casings and ducts shall be able to move 1 inch in any direction relative to each other without short-circuiting metal to metal or stretching taut the flexible connection.

3.11 INSTALLATION OF FLEXIBLE ELECTRICAL CONNECTIONS TO EQUIPMENT

A. Make flexible electrical connections to all vibrating equipment.
    1. Alternate A: Install flexible conduit in a grossly slack, shallow "U" form. Flexible conduit to be at least 3 feet or 20 diameters long, whichever is the longer.
    2. Alternate B: The flexible coupling shall be free of any nearby building construction and shall be installed slack and free of strain in any direction.

3.12 INSTALLATION OF RESILIENT AND AIRTIGHT SLEEVES

A. RPS1 and PPS2 Resilient Pipe Sleeves: Observe requirements in 3.10A1 and 2 above. In lieu of packing and sealant, clamp factory-fabricated sleeve assemblies tightly around penetrating elements, using built-in or field-supplied clamping devices. Apply clamping of sleeves to penetrating services before sealing of sleeves to penetrated constructions.
B. Custom Sleeves:
    1. Cut a clean opening in the penetrated construction very nearly the size of the sleeve for each penetrating element. Provide lintels above, relief structure below, and vertical framing between and to the sides as required. Provide the above, escutcheon plates, and anything else necessary to make the penetrated structure as solid and massive near the penetrations as away from the penetrations.
    2. Set the metal sleeve into the penetrated construction in an airtight manner around its outer periphery, using grout, dry packing, plaster, or drywall compound full depth and all around--but only to a maximum width of 1 inch--or the requirements of the above paragraph shall not have been satisfied.
    3. Pack the 1/2-inch wide annular opening with glass fiber between metal sleeve and penetrating element full depth all around to a firm degree of compaction. Leave a 1/2-inch deep annular opening free at each end of the metal sleeve; fill this fully with acoustical sealant.

END OF SECTION

SECTION 23 05 93 - TESTING, ADJUSTING AND BALANCING

PART 1 - GENERAL

1.1 APPLICABLE REQUIREMENTS

A. All work to be furnished and installed under this section shall comply with all the requirements of General Conditions, Supplemental Conditions, Division 01 - General Requirements, Section 230500 - Basic Materials and Methods, and other Sections in Division 23 specified herein.

1.2 WORK RELATED IN OTHER SECTIONS

A. Section 230500: Basic Materials and Methods
B. Section 230900: Controls and Instrumentation
C. Section 233113: Air Distribution
D. Division 26: Electrical.

1.3 SUMMARY

A. Scope: Extent of testing, adjusting and balancing work required by this Section is indicated on the drawings, in schedules, and by the requirements of this Section, and Section 230500 -Basic Mechanical Requirements.
B. Systems: Testing, adjusting and balancing specified in this Section shall include, but not be limited to, the following systems:

1. Air handling systems including supply, return and exhaust.
2. Air distribution ductwork including supply, return and exhaust.
3. Automatic temperature control system.
4. General exhaust systems.
5. Domestic hot water supply and return.
6. Instruction of Owner's personnel for future balancing of systems.

C. Reference Standards

1. ASHRAE-Standard 111—1988 Practices for Measurement, Testing, Adjusting, and Balancing of Building Heating, Ventilation, Air Conditioning, and Refrigeration Systems.
2. ASHRAE—2003 HVAC Applications Handbook: Chapter 37--Testing, Adjusting and Balancing.
3. AABC—National Standards for Total System Balance.
4. NEBB—Procedural Standards for Testing, Balancing and Adjusting of Environmental Systems.
5. SMACNA—HVAC Systems-Testing, Adjusting and Balancing.
6. Sheet Metal Industry--Testing, Adjusting, Balancing Bureau (TABB) Certified Technician Standards, Procedures and Specifications.
7. American National Standards Institute (ANSI): Comply with the following:

a. S1.4Specification for Sound Level Meters.
b. S1.11Specification for Octave-Band and Fractional-Octave-Band Analog and Digital Filters.

1.4 QUALITY ASSURANCE

A. Contractors Qualifications: A specialist certified by the National Environmental Balancing Bureau (NEBB) or Associated Air Balance Council (AABC) with at least 5 years of

experience in those testing, adjusting and balancing requirements similar to those required for this project, who is not the installer of the system to be tested and is otherwise independent of the project.

B. Acceptable Testing and Balancing Firms

1. American Air Balance Co., Inc.
2. Winaire Inc.
3. San Diego Air Balance Co.
4. Penn Air Control, Inc.

C. Testing, adjusting, and balancing shall be performed by a certified NEBB technician or a certified AABC technician under direct field supervision of a Certified NEBB Supervisor or a Certified AABC Supervisor.

D. Penalty: The Contractor shall submit the name of the organization he proposes to employ for approval within 30 days after contract award. If the Contractor fails to submit the name of an acceptable agency within the specified time, a firm may be selected to accomplish the work, and this selection shall be binding upon the Contractor at no additional cost.

E. Retainages: In addition to any other sums retained or withheld pursuant to the provisions of this Contract, the amount of dollars will be withheld from payments to the contractor until such time as the work has been completed and accepted. In no event will this amount be paid to the Contractor prior to 60 days following acceptance of the project; during such time, the Contractor shall investigate and correct any reported deficiencies unless such deficiencies are a result of unauthorized tampering by building occupants.

F. Calibration of Testing Instruments: All measurement instruments used for testing, adjusting, balancing, and commissioning shall be calibrated. The time between the most recent calibration data and the final test report date shall not be over 6 months

G. Testing and balancing agency, as part of its contract, shall act as authorized inspection agency responsible to Consulting Engineer and Owner, and shall list all items that are installed incorrectly, require correction, or have not been installed in accordance with contract Drawings and Specifications, pertaining to air distribution, cooling and heating systems. The testing and balancing agency is required to provide written reports of all deficiencies and proposed recommendations to the Owner' Representative, Contractor, Architect and Engineer.

H. The testing and balancing agency shall provide with his bid a performance guarantee covering all phases of the work as herein specified.

I. The General and mechanical contractors shall cooperate with the selected testing and balancing agency in the following manner:

1. Provide sufficient time before final completion dates so that tests and balancing can be accomplished.
2. The various system installers, suppliers and contractors shall provide all required materials, labor and tools to make corrections when required without undue delay. Install balancing dampers as required by testing and balancing agency.
3. The contractor shall put all heating, ventilating and air conditioning systems and equipment into full operation and shall continue the operation of the same during each working day of testing and balancing.
4. Testing and balancing agency shall be kept informed of any major changes made to the system during construction, and shall be provided with a complete set of Record Drawings.
5. The General Contractor shall make space and other facilities available to the testing and balancing agency to enable their work to progress. The General Contractor shall schedule the work of other trades to avoid conflicts with this work.

1.5 SUBMITTALS

A. Conform to the Submittals requirements of Division 01.

B. Forms: The Contractor shall deliver a complete copy of either NEBB or AABC standard forms for testing and balancing work associated with the project. These forms shall serve as specific guidelines for producing final test report. Hybrid or non-standards forms are not acceptable. Data shall include, but not be limited to, a title page with building information, instrument lists, air flows, water flows, temperatures, sound levels, capacities, nameplate data.

C. Test Reports: Provide six (6) certified test reports, signed by the test and balance supervisor who performed the work. The final reports shall include identification and types of instruments used, and their most recent calibration date, and key plans identifying all inlets and outlets. Final test reports shall be typed. Hand written reports are not acceptable.

D. Maintenance Data: Include, in maintenance manuals, copies of certified test reports and identification of instruments.

E. Qualifications: The Contractor shall submit the certified individual qualifications of all persons responsible for supervising and performing the actual work and the name of the certifying engineer. Provide a reference list of five (5) similar size projects with contact person and telephone number.

1.6 AGENDA

A. Agenda: A preliminary report and agenda shall be submitted and approved prior to the start of testing and balancing work.

1. Review plans and specifications prior to installation of any of the affected systems, and submit a report indicating any deficiencies in the systems that would preclude the proper adjusting, balancing, and testing of the systems.
2. The agenda shall include a general description of each air and water system with its associated equipment and operation cycles for heating and cooling.
3. The agenda shall include a list of all air and water flows to be performed at all mechanical equipment.
4. The agenda shall incorporate the proposed selection points for sound measurements, including typical spaces as well as sound sensitive areas such as conference rooms.
5. The agenda shall also include specific test procedures and parameters for determining specified quantities (e.g. flow, drafts, sound levels) from the actual field measurements to establish compliance with contract requirements. Samples of forms showing application of procedures and calculations to typical systems shall be submitted.
6. Specific test procedures for measuring air quantities at terminals shall specify type of instrument to be used, method of instrument application (by sketch) and factors for:

   a. Air terminal configuration.
   b. Flow direction (supply or exhaust).
   c. Velocity corrections.
   d. Effective area applicable to each size and type of air terminal.
   e. Density corrections.

7. The agenda shall include identification and types of measurement instruments to be used, and their most recent calibration date.

1.7 JOB CONDITIONS

A. General: Do not proceed with testing, adjusting and balancing work until the following conditions have been met.

1. Work has been completed and is operable. Ensure that there is no latent residual work yet to be completed on the tested equipment.
2. Work scheduled for testing, adjusting and balancing is clean and free from debris, dirt and discarded building materials.

3. All architectural openings (doors, windows, and other openings) which may affect the operation of the system to be tested, adjusted, and balanced shall be at their normal states.
4. All related mechanical systems which may affect the operation of the system to be tested, adjusted, and balanced shall be at their normal operating conditions.

PART 2 - PRODUCTS

2.1 TEST HOLES

A. Test holes shall be provided in ducts, housings and pipes as necessary for the proper air and water measurements and to balance systems. At each location where ducts or plenums are insulated, test holes shall be provided with an approved extension with plug fitting.

2.2 PATCHING MATERIALS

A. Material: Seal, patch and repair ductwork, piping and equipment drilled or cut for testing purposes.

1. Plastic plugs with retainers may be used to patch drilled holes in ductwork and housings.
2. Piping shall be capped with materials the same as the piping system.
3. Insulation shall be neatly hemmed with metal or plastic edging, leaving test points visible for future testing.

2.3 TEST INSTRUMENTS

A. Standards: Utilize instruments and equipment of type, precision, and capacity as recommended in the NEBB "Procedural Standards for Testing, Adjusting, and Balancing of Environmental Systems" and AABC manual MN-1.
B. Test Instruments: All instruments used for measurements shall be accurate and calibration histories for each instrument shall be available for examination. Each test instrument shall be calibrated by an approved laboratory or by the manufacturer. A representative has the right to request instrument recalibration, or the use of other instruments and test methodology, where accuracy of readings is questionable.
C. Additional Instruments: Permanently installed measuring instruments, such as temperature and pressure gauges, shall be checked against transfer standard instruments. Any instrument which does not meet specification requirement shall be replaced or recalibrated.
D. Cone Instruments: The Contractor shall employ manufactured enclosure type cones, capable of air volume direct readings, for all diffuser/grille/register air flow measurements. The readout meters shall meet calibration requirements.

PART 3 - EXECUTION

3.1 PROCEDURES AND INSTRUMENTS, GENERAL

A. Requirements: All systems and components thereof shall be adjusted to perform as required by drawings and specifications.
B. Test Duration: Operating tests of heating and cooling coils, fans, and other equipment shall be of not less than four hours duration after stabilized operating conditions have been established. Capacities shall be based on temperatures and air and water quantities measured during such tests.
C. Instrumentation: Method of application of instrumentation shall be in accordance with the approved agenda.

1. All instruments shall be applied in accordance with the manufacturer's certified instructions.
2. All labor, instruments, and appliances required shall be furnished by the Contractor. Permanently installed instruments used for the tests (e.g., flow meters and Btu meters) shall not be installed until the entire system has been cleaned and ready for operation.

3.2 DUCT SMOKE DETECTORS

A. The testing and balancing agency shall direct the placement of all duct mounted smoke detectors.

1. Obtain information from the Contractor who is to furnish the smoke detectors on the proper device placement and installation limitations and on the proper differential pressure across the sampling tubes of the duct detectors.
2. Based on the submitted manufacturer's installation guidelines indicate the proper mounting location to the installing Contractor.

B. After the installation of all smoke detectors test them again in the final installation position and report differential pressures.

3.3 AIR SYSTEM PROCEDURES

A. Adjustments: Adjust all air handling systems to provide approximate design air quantity to or through, each component, and to maintain stable and comfortable interior temperatures, free of drafts or stagnant conditions. Adjusting and balancing of all systems shall be conducted during periods of the year approximating maximum seasonal operation.
B. Equalizers: Equalizing devices shall be adjusted to provide uniform velocity across the inlets (duct side for supply) of terminals prior to measuring flow rates.
C. Balance: Flow adjusting (volume control) devices shall be used to balance air quantities (i.e., proportion flow between various terminals comprising system) to the extent that their adjustments do not create objectionable air motion or sound (i.e., in excess of specified limits).

1. Balancing between runs (submains, branch mains, and branches) generally shall be accomplished by flow regulating devices at, or in, the divided-flow fitting.
2. Restriction imposed by flow regulating devices in or at terminals shall be minimal.
3. Final measurements of air quality shall be made after the air terminal has been adjusted to provide the optimum air patterns of diffusion.

D. Fan Adjustment: Total air system quantities, generally, shall be varied by adjustment of fan speeds or axial-flow fan wheel blade pitch. Damper restriction of a system's total flow may be used only for systems with direct-connected fans (without adjustable pitch blades), provided system pressure is less than 1/2-inch W.G. and sound level criteria is met.
E. Air Measurement: Where air quantity measuring devices are specified in other sections such systems shall be used as a cross-check of portable measuring equipment.

1. Except as specifically indicated herein, pitot tube traverses shall be made of each duct to measure air flow therein. Pitot tubes, associated instruments, traverses, and techniques shall conform to the ASHRAE "Handbook Fundamentals Inch Pound Edition."
2. For ducts serving modular office areas with movable partitions, which are subject to change, pitot tube traverses may be omitted provided the duct serves only a single room or space and its design volume is less than 2000 cfm. In lieu of pitot tube traverses, airflow in the duct shall be determined by totaling volume of individual terminals served, measured as described herein.

3. Where duct's design velocity and air quantity are both less than 1000 (fpm/cfm), air quantity may be determined by measurements at terminals served.

F. Test Holes: Test holes shall be in a straight duct, as far as possible downstream from elbows, bends, take-offs, and other turbulence generating devices, to optimize reliability of flow measurements.

G. Air Terminal Balancing: Generally, measurement of flow rates by means of velocity meters applied to individual terminals, with or without cones or other adapters, shall be used only for balancing. Measurement of air quantities at each type of air terminal (inlet and outlet) shall be determined by the method approved for the balancing agenda. Laboratory tests shall be conducted to prove of methodology when so directed. Such tests shall be conducted in conformance with applicable ASHRAE or American Society of Mechanical Engineers (ASME) codes and shall be made at no cost.

H. Air Motion: Air motion and distribution shall be as specified and indicated on drawings. The Contractor at no additional cost shall, in addition to air motion measurements, make smoke tests wherever requested to demonstrate the air distribution from air terminals.

I. Air System Test and Balance Procedure: Perform the following tests, and balance each system in accordance with the following requirements:

1. Test and adjust blower RPM to design requirements.
2. Test and record motor full load amperes.
3. Make pitot tube traverse of main supply ducts and obtain design CFM at fans.
4. Test and record system pressures, suction and discharge.
5. Test and adjust system for design recirculated air, CFM.
6. Test and adjust system for design CFM outside air.
7. Test and record entering air temperatures.
8. Test and record leaving air temperatures.
9. Adjust all supply, return and exhaust air ducts to proper design CFM.
10. Adjust all zones to proper design CFM, supply and return.
11. Test and adjust duct systems and each diffuser, grille, and/or register to within 10% of design requirements.
12. Each grille, diffuser and register shall be identified as to location and area.
13. Size, type and manufacturer of VAV boxes, diffusers, grilles, registers and all tested equipment shall be identified and listed. Manufacturer's ratings on all equipment shall be used to make required calculations.
14. Readings and tests of diffusers, grilles and registers shall include required FPM velocity and test resultant velocity, required CFM and test resultant CFM after adjustment.
15. In cooperation with the control manufacturer's representative, setting adjustments of automatically operated dampers to operate as specified, indicated, and/or noted. Testing agency shall check all controls requiring adjustment by control installers. Room thermostats shall be checked for cooling and heating response.
16. All diffusers, grilles and registers shall be adjusted to minimize drafts in all areas.
17. Adjust overall system balances to allow all self-closing exterior doors to close from any open position. Maximum interior air pressure in a 100% outside air intake mode shall not exceed 0.05" static pressure relative to the outside air pressure.
18. As part of the work of this contract, the HVAC contractor shall make any changes in the pulleys, belts and dampers or the addition of dampers required for correct balance as recommended by air balance agency, at no additional cost to Owner.
19. After air balancing is completed and RPM determined, HVAC Contractor shall provide fixed pitch pulleys.
20. All mixing boxes, VAV air valves, control dampers, smoke dampers and similar devices which operate at 100% shut off shall be tested for leakage.
21. Variable Air Volume Fan Systems: The primary balancing mode is 100% outside air with all terminal boxes on a full call for cooling. Also check and record performance at minimum outside air with all terminal boxes on call for full cooling and at minimum outside air with all terminal boxes on call for full heating. Verify that the systems are

operating on a stable part of the fan curves in each mode. Record final duct static controller settings.

22. Provide certification for pressurization of stairs and vestibules as required by the local codes and fire marshal.

3.4 AIR SYSTEM DATA

A. Report: The certified report shall include for each air handling system the data listed below.

1. Equipment (Fan or Factory Fabricated Station Unit):

a. Installation data

1) Manufacturer and model
2) Size
3) Arrangement, discharge and class
4) Motor hp, voltage, phase, cycles, and full load amps
5) Location and local identification data

b. Design data

1) Data listed in schedules on drawings and specifications.

c. Fan recorded (test) data

1) cfm
2) static pressure
3) rpm
4) motor operating amps
5) motor operating bhp

2. Duct Systems:

a. Duct air quantities (maximum and minimum) - main, submains, branches, outdoor (outside) air, total air, and exhaust:

1) duct size(s)
2) number of pitot tube (pressure measurements)
3) sum of velocity measurements (Note: Do not add pressure measurements)
4) average velocity
5) recorded (test) cfm
6) design cfm

b. Individual air terminals

1) terminal identification supply or exhaust, location and number designation
2) type size, manufacturer and catalog identification applicable factor for application, velocity, area, etc., and designated area
3) design and recorded velocities - fpm (state "core," "inlet," etc., as applicable)
4) design and recorded quantities - cfm (deflector vane or diffusion cone settings)

3.5 WATER SYSTEM PROCEDURES

A. Preparation:

1. Open all valves to full open position. Close coil bypass stop valves. Set mixing valve to full coil flow.
2. Remove all strainers and clean same. Reinstall.

3. Examine water system and determine if water has been treated and cleaned.
4. Check pump rotation.
5. Check expansion tank to determine they are not air bound and the system is completely full of water.
6. Check all air vents at high points of water systems and determine that all are installed and operating freely.
7. Check operation of automatic bypass valve.
8. Check and set operating temperatures of all equipment at design requirements.
9. Complete air balance must have been accomplished before actual water balance begins.

B. Adjustment: All heating, cooling and condensing water systems shall be adjusted to provide required quantity to or through each component.

C. Metering: Water quantities and pressures shall be measured with calibrated meters.

1. Venturi tubes, orifices, or other metering fittings and pressure gauges shall be used to measure water flow rates and balance systems. Systems shall be adjusted to provide the approved pressure drops through the heat transfer equipment (coils except room units, converters, etc.) prior to the capacity testing.
2. Where flow metering fittings are not installed, in air/water type heat transfer equipment, flow balance shall be determined by measuring the air side energy differential across the heat transfer equipment. Measurement of water temperature differential shall be performed with the air system, adjusted as described herein, in operation.

D. Automatic Controls: Automatic control valves shall be positioned for full flow through the heat transfer equipment of the system during tests.

E. Flow: Flow through bypass circuits at three-way valves shall be adjusted to equal that through the supply circuit, when the valve is in the bypass position.

F. Distribution: Adjustment of distribution shall be effected by means of balancing devices (cocks, valves, and fittings) and automatic flow control valves as provided; service valves shall not be used.

1. Where automatic flow control valves are utilized in lieu of Venturi tubes, only pressure differential need be recorded, provided that the pressure is at least the minimum applicable to the tag rating.

G. Special Procedures: Where available pump capacity (as designed) is less than total flow requirements of individual heat transfer units of system served, full flow may be simulated by the temporary restriction of flow to portions of the system; specific procedures shall be delineated in the agenda.

H. Water System Test and Balance Procedure: Perform the following tests, and balance each system in accordance with the following requirements:

1. Set chilled, heating and condenser water pumps to proper gallons per minute delivery.
2. Adjust chilled water flow though chiller(s).
3. Adjust heating water flow through boiler(s).
4. Adjust condenser water flow through cooling tower(s).
5. Test and record entering and leaving water temperatures through chillers, boilers and cooling towers.
6. Test and record water temperatures at inlet and outlet side of each terminal unit. Note rise or drop of temperatures from source.
7. Proceed to balance each terminal unit.
8. Upon completion of flow readings and adjustments at coils, mark all settings and record data.
9. After adjustments to coils are made, recheck settings at the pumps, chiller, boilers, and cooling towers and readjust if required.

10. Record and check the following items at each coil.
    a. Inlet water temperatures.
    b. Leaving water temperatures.
    c. Water pressure drop of each coil.
11. Pump operating suction and discharge pressures and final total dynamic head.
12. List all mechanical specifications of pumps.
13. Rated and actual running amperage of pump motor.
14. Water metering device readings.

3.6 WATER SYSTEM DATA

A. Report: The certified report for reach water system shall include the data listed below.

1. Pumps:
    a. Installation data
        1) manufacturer and model
        2) size
        3) type drive
        4) motor hp, voltage, phase, and full load amps
    b. Design data
        1) gpm
        2) head
        3) rpm and amps
    c. Recorded data
        1) discharge pressures (full-flow and no-flow)
        2) suction pressures (full-flow and no-flow) operating head
        3) operating gpm (from pump curves if metering is not provided) no-load
        4) amps
        5) full-flow amps
        6) no-flow amps
2. Air Heating and Cooling Equipment:
    a. Design data
        1) load in Btu or MBh
        2) gpm
        3) entering and leaving water temperature
        4) entering and leaving air conditions (DB and WB)
        5) cfm
        6) water pressure drop
        7) entering steam pressure
    b. Recorded data
        1) type of equipment and identification (location or number designation)
        2) entering and leaving air conditions (DB and WB)
        3) entering and leaving water temperatures
        4) gpm (if metered)
        5) temperature rise or drop
        6) entering steam pressure
3. Water Chilling Units:
    a. Installation data

1) manufacturer and model
2) motor hp, voltage, cycles, phase, and full load amps
3) part load amperes
4) gpm - chiller and condenser
5) water pressure drop - chiller and condenser
6) entering and leaving water temperature - chiller and condenser

b. Recorded data (chiller and condenser)

1) gpm
2) water pressure drop
3) entering and leaving water temperature
4) amperes

3.7 SOUND TEST PROCEDURES

A. Scope: Tests of sound levels shall be made at each selection point included in the agenda.
B. Timing: Sound level measurements shall be taken at times when the building is unoccupied, or when activity in surrounding areas and background noise level in areas tested are at a minimum and relatively free from sudden changes in noise levels.

1. Measurements shall be taken with all equipment turned off, except that being tested.
2. The required sound levels shall be measured at any point within a room not less than 6 feet from an air terminal or room unit, and not closer than 3 feet from any floor, wall, or ceiling surface.

C. Meters: Sound levels shall be measured with a sound meter complying with ANSI S1.4. The "A" scale shall be used to measure over all sound levels. To determine the specified octave band levels, the above sound level meter, set on "C" scale, shall be supplemented by an octave band analyzer complying with ANSI S1.11.
D. Equipment Components: The "Equipment Component" of room sound equals LPt-C. The "Equipment Component" of room sound (noise) levels shall be determined for each of eight octave bands as follows:

1. Measure room sound pressure level "LPb" with equipment to be tested shut off.
2. Measure room sound pressure level "LPt" with equipment to be tested turned on.
3. Calculate LPt-LPb; if this value is less than 1, applicable test must be rerun with lower background level (LPb) unless LPt is within sound pressure level specified for equipment.
4. Determine "c" from the table below.

LPt-LPb (db)	c (db)
1	7
2	4
3	3
4 to 4- ½	2
5 to 5- ½	1 – ½
6 to 7- ½	1
8 to 12	½
over 12	0

3.8 SOUND LEVEL DATA

A. Report: certified report shall record data on sound levels, taken at each selected location, as follows:

1. Source of sound and location.
2. Diagram or description of relationship of sound source to measuring instrument.

3. "A" scale readings equipment being tested turned off (ambient) equipment being tested turned on (operating conditions).
4. Readings at each specified octave band frequency equipment being tested turned off (ambient) equipment being tested turned on (operating conditions).
5. "Equipment Components" of sound (noise) levels with applicable calculations per "Sound Test Procedures".
6. Graph showing relationship between pressure levels specified and recorded readings.

B. Retest: Subsequent to any correctional construction work, such as acoustic corrections, measurement shall be made to verify that associated air and water quantities, as previously measured, have not been disrupted.

1. Certified report shall record all sound data, and their locations, after final adjustments of air and water systems involves.

3.9 CERTIFIED REPORTS

A. Submittals: Six (6) copies of the reports described herein, covering air and water system performance, air motion (fpm), and sound pressure levels, shall be submitted prior to final tests and inspection.
B. Instrument Records: Types, serial numbers, and dates of calibration of all instruments shall be included.
C. Reports: Reports shall conspicuously identify items not conforming to contract requirements, or obvious malfunction and design deficiencies.
D. Certification: Certification shall include checking of adherence to agenda, of calculations, of procedures, and evaluation of final summaries.

3.10 FINAL COMMISSIONING TESTS, INSPECTIONS AND ACCEPTANCE

A. Scope: Test shall be made to demonstrate that capacities and performance of air and water systems comply with contract requirements.

1. At the time of final inspection, the Contractor shall recheck, random selection of data (water and air quantities, air motion, and sound levels) recorded in the certified report. In addition, all courtrooms, auditoriums, and conference rooms shall be rechecked.
2. Points and areas for recheck shall be selected by the commissioning team.
3. Measurement and test procedures shall be the same as approved for work forming basis of certified report.
4. Selections for recheck (specific plus random), in general, will not exceed 25 percent of the total number tabulated in the report, except that special air systems may require a complete recheck for safety reasons.

B. Retests: If random tests elicit a measured flow deviation of 10 percent or more from, or a sound level of 2 db or more greater than, that recorded in the certified report listings, as 10 percent or more of the rechecked selections, the report shall be automatically rejected. In the event the report is rejected, all systems shall be readjusted and tested, new data recorded, new certified reports submitted, and new inspection tests made, all at no additional cost. Retainage time shall be based on the date of the final acceptance of the certified report.
C. Marking of Settings: Following final acceptance of certified reports, the settings of all valves, splitters, dampers, and other adjustment devices shall be permanently marked by the Contractor so that adjustment can be restored if disturbed at any time. Devices shall not be marked until after final acceptance.

END OF SECTION

SECTION 23 07 00 - HVAC INSULATION

PART 1 - GENERAL

1.1 APPLICABLE REQUIREMENTS

A. All work to be furnished and installed under this section shall comply with all the requirements of General Conditions, Supplemental Conditions, Division 01 - General Requirements, and Section 230500 - Basic Materials and Methods, and other Sections in Division 23 specified herein.

1.2 SCOPE

A. All work to be furnished and installed under this Section shall include, but not necessarily be limited to, providing insulation for the following:

1. Ductwork
   a. All supply air ductwork, unless otherwise shown on drawings.
   b. All return air ductwork, unless otherwise shown on drawings.
   c. Acoustical duct lining, in vertical/horizontal supply and return ducts within twenty feet (20') of air handling equipment and where otherwise shown on drawings.
   d. Outside air ductwork in return plenums, mechanical rooms and in freezing climates.
   e. Exhaust air ductwork in cold air plenums.
   f. Vapor/moisture ductwork.
   g. Insulation to protect fire rated exhaust systems
2. Piping:
   a. Heating hot water supply and return piping.
   b. Chilled water supply and return piping.
   c. Condenser water supply and return piping.
   d. Steam and condensate return piping.
   e. Heat recovery piping.
   f. Process piping.
   g. Valves, pumps, air separators, strainers and fittings in insulated piping systems.
   h. Refrigerant hot gas and suction piping.
3. Hot and cold equipment.
   a. Generator exhaust systems.
4. Plenums and equipment rooms, as noted.

B. Types of mechanical insulation specified in this Section include the following:

1. Fiberglass pipe insulation.
2. Cellular glass pipe insulation.
3. Calcium silicate pipe insulation.
4. Flexible elastomeric closed cell insulation.
5. Fiberglass duct insulation.
6. Natural fiber duct liner.
7. Polymide Foam Acoustic duct liner.
8. Cellular glass duct insulation.
9. Flexible unicellular duct insulation.
10. Calcium silicate duct insulation.

11. Fiberglass equipment insulation.
12. Calcium silicate equipment insulation.
13. Cellular glass equipment insulation.
14. Flexible unicellular equipment insulation.
15. Insulation jackets.
16. Insulation accessories.

1.3 RELATED WORK SPECIFIED ELSEWHERE

A. Section 220501: Plumbing.
B. Section 230500: Basic Materials and Methods.
C. Section 232113: HVAC Piping, Valves and Specialties.

1.4 DEFINITIONS

A. Ambient: The air temperature to be maintained in a conditioned room. Typically between 70°F and 78°F.
B. Insert: Spacer placed between the pipe support system and the piping to allow for the space required for insulation.
C. Insulation Group (IG): Definition of Insulation Materials and Operating Temperatures.
D. Insulation Shield: Buffer material placed between the pipe support system and the insulation to prevent the insulation material from crushing.
E. Jacket: Protective covering over the pipe insulation; may be factory applied such as “all service jacket” or field applied to provide additional protection; of such materials as canvas, PVC, aluminum or stainless steel.
F. Piping Insulation: Thermal insulation applied to prevent heat transmission to or from a piping system.
G. Vapor Barrier Jacket: Insulation jacket material that impedes the transmission of water vapor.
H. Freezing Climate: Where outdoor design temperature is less than 33° F, as stated in ASHRAE fundamentals under 99% column for winter design conditions.

1.5 QUALITY ASSURANCE

A. Codes and Standards: Provide products conforming to the requirements of the following:

1. American Society for Testing and Materials (ASTM): Manufacture and test insulation in accordance with the ASTM Standards, including:

a. B209 - Specification for Aluminum and Aluminum-Alloy Sheet and Plat.
b. C165 - Recommended Practice for Measuring Compressive Properties of Thermal Insulation.
c. C167 - Test Methods for Thickness and Density of Blanket or Batt Thermal Insulations.
d. C177 - Test Method for Steady-State Heat Flux Measurements and Thermal Transmission.
e. Properties by Means of the Guarded-Hot-Plate Apparatus.
f. C195 - Specification for Mineral Fiber Thermal Insulating Cement.
g. C196 - Specification for Expanded or Exfoliated Vermiculite Thermal Insulating Cement.
h. C302 - Test Method for Density of Preformed Pipe-Covering-Type Thermal Insulation.
i. C303 - Test Method for Density of Preformed Block-Type Thermal Insulation.
j. C305 - Test for Thermal Conductivity of Pipe Insulation.
k. C356 - Test for Linear Shrinkage of Preformed High-Temperature Thermal Insulation.

l. C411 - Test for Hot-Surface Performance of High Temperature Thermal Insulation.
m. C423 – Standard Test Method for Sound Absorption and Sound Absorption Coefficients by the Reverberation Room Method.
n. C449 - Specification of Mineral Fiber Hydraulic-Setting Thermal Insulating and Finishing Cement.
o. C518 - Standard Test Method for Steady-State Thermal Transmission Properties by Means of the Heat Flow Meter Apparatus.
p. C533 - Specification for Calcium Silicate Block and Pipe Thermal Insulation.
q. C534 - Specification for Preformed Flexible Elastomeric Cellular Thermal Insulation in Sheet and Tubular Form.
r. C547 - Specification for Mineral Fiber Preformed Pipe Insulation.
s. C552 - Specification for Cellular Glass Block and Pipe Thermal Insulation.
t. C553 - Specification for Mineral Fiber Blanket-Type Pipe Insulation (Industrial Type).
u. C592 - Mineral Fiber Blanket Insulation and Blanket-Type Pipe Insulation (Metal-Mesh Covered).
v. C612 - Specification for Mineral Fiber Block and Board Thermal Insulation.
w. C916 - Standard Specification for Adhesives for Duct Thermal Insulation.
x. C921 - Practice for Determining Properties of Jacketing Materials for Thermal Insulation.
y. C1104 - Standard Test Method for Determining the Water Vapor Sorption of Unfaced Mineral Fiber Insulation.
z. C1071 - Standard Specification for Thermal and Acoustical Insulation.
aa. C1338 - Standard Test Method for Determining Fungi Resistance of Insulation Materials and Facings..
bb. E84 - Test Method for Surface Burning Characteristics of Building Materials.
cc. E119 - Test for Fire Resistance.
dd. G21 - Standard Practice for Determining Resistance of Synthetic Polymeric Materials to Fungi.
ee. G22 - Standard Practice for Determining Resistance of Synthetic Polymeric Materials to Bacteria.

2. American Society of Heating, Refrigerating, and Air-Conditioning Engineers (ASHRAE): Provide and install pipe and duct insulation in accordance with the following ASHRAE Standard:

a. 90 Energy Conservation in New Building Design.

3. National Fire Protection Association (NFPA): Manufacture insulation in accordance with the following NFPA standards:

a. 255 Test Methods, Surface Burning Characteristics of Building Materials.

B. Do not provide materials with flame proofing treatments subject to deterioration due to the effects of moisture or high humidity.

C. Products Containing Prohibited Chemicals:

1. Products containing the following prohibited chemicals for use as flame retardants or for other purposes will not be acceptable when present in quanties greater than 0.1% by mass:

a. Pentabrominated diphenyl ether (CAS#32534-81-9)
b. Octabrominated diphenyl ether (CAS#32536-52-0)
c. Decabrominated diphenyl ether (CAS#1163-19-50

D. Flame/Smoke Rating: Provide composite mechanical insulation (insulation, jackets, coverings, sealers, mastics and adhesives) with flame-spread index of 25 or less, and smoke-developed index of 50 or less, as tested by ASTM E84 (NFPA 255) Method. In

addition, the products, when tested, shall not drip flame particles, and flame shall not be progressive. Provide Underwriters Laboratories, Inc., label or listing; or satisfactory certified test report from an approved testing laboratory to prove the fire hazard ratings for materials proposed for use do not exceed those specified.

E. Corrosiveness: Provide insulation such that when tested in accordance with the following test, the steel plate in contact with the insulation shows no greater corrosion than sterile cotton in contact with a steel plate for comparison.

1. Test Specimen: Two specimens shall be used, each measuring 1” by 4” by approximately ½” thick.
2. Apparatus: Provide a humidity test chamber in which two polished-steel test plates, 1” wide, 4” long and 0.020” thick, shall be placed. Plates shall be clear finish, cold-rolled strip steel, American quality, quarter hard, temper No. 3, weighing 0.85 lb/sq. ft.
3. Procedure: The steel test plates shall be rinsed with cp benzol until their surfaces are free from oil and grease and allowed to dry. One piece of cold-rolled steel shall be placed between the two insulation specimens and secured with tape or twine. The test specimen and uncovered plate shall be suspended vertically in an atmosphere having a relative humidity of 95% (plus or minus 3%), and a temperature of 120°F (plus or minus 3°F), for 96 hours, and then be examined for corrosion.

F. Insulation thickness shall be the greater standard of that specified here or the State energy conservation requirements.

1.6 SUBMITTALS

A. Product Data: Submit manufacturer's technical product data and installation instructions for each type of mechanical insulation. Submit schedule showing manufacturer's product number, K-value, thickness, and furnished accessories for each mechanical system requiring insulation. Also furnish necessary test data certified by an independent testing laboratory. Submit samples.

B. Provide a statement with the submittal indicating that no product submitted contains an amount equal to or greater than 0.10% by mass of the following chemicals:

1. Pentabrominated diphenyl ether (CAS#32534-81-9)
2. Octabrominated diphenyl ether (CAS#32536-52-0)
3. Decabrominated diphenyl ether (CAS#1163-19-50

C. Maintenance Data: Submit maintenance data and replacement material lists for each type of mechanical insulation. Include this data and product in maintenance manual.

1.7 DELIVERY, STORAGE, AND HANDLING

A. Deliver insulation, coverings, cements, adhesives, and coating to the site in containers with manufacturer's stamp or label affixed showing fire hazard indexes of products.

B. Store and protect insulation against dirt, water, chemical, and mechanical damage. Do not install damaged or wet insulation; remove from project site.

PART 2 - PRODUCTS

2.1 MANUFACTURERS

A. Johns Manville, Owens-Corning, Knauf, Armstrong, Pittsburgh-Corning, Certainteed, Halstead, Rubatex, 3M FireMaster, Pabco, Reflectix, or approved equal. Manufacturer and insulation types listed below indicate a minimum acceptable level of quality required for each classification.

2.2 DUCTWORK INSULATIONS

A. Flexible Fiberglass Blanket: Johns Manville Microlite XG, formaldehyde-free Type 75 Flexible Blanket, Knauf ECOSE Duct Wrap:

1. Application: Insulation wrap for ductwork, or other HVAC systems.
2. 'K' Value: ASTM C553-92, 0.27 Btu•in./(hr•ft²•ºF) at 75°F installed full thickness.
3. Density: 0.75 lb/cu ft.
4. Vapor Barrier Jacket: FSK (Foil-Scrim-Kraft) aluminum foil faced reinforced with fiberglass yarn and laminated to fire-resistant kraft.
5. Installation: See Part 3 below.

B. Rigid Fiberglass Board: Knauf ECOSE insulation board, Johns Manville Linacoustic R-300, Type II duct board:

1. Application: Lining insulation for HVAC plenums and ductwork.
2. 'K' Value: ASTM C1071, 0.23 Btu•in./(hr•ft²•ºF) at 75°F.
3. Density: 3.0 lb/cu ft.
4. Vapor Barrier Jacket: FSK (Foil-Scrim-Kraft) aluminum foil faced reinforced with fiberglass yarn and laminated to fire-resistant kraft paper.
5. Installation: See Part 3 below.

C. Fiberglass Acoustic Duct Liner: Johns Manville Duct Liner PM with Anti-Microbial Treatment.

1. Application: Duct lining for acoustic or thermal purposes.
2. 'K' Value: ASTM 1071, 0.23 Btu•in./(hr•ft²•ºF) at 75°F.
3. Noise Reduction Coefficient: 0.65 or higher based on "Type A mounting."
4. Maximum Velocity on Mat or Coated Air Side: 5,000 ft/min.
5. Adhesive: UL listed waterproof type compliant with ASTM C916.
6. Fasteners: Duct liner galvanized steel pins, welded or mechanically fastened.

D. Natural Fiber (Cotton) Acoustic Duct Liner: Reflectix #HVNF, Flexible Blanket with Anti-Microbial Treatment:

1. 'K' Value: ASTM C518, 0.25 Btu•in./(hr•ft²•ºF) at 75°F.
2. Noise Reduction Coefficient: 0.75 or higher based on "Type A mounting."
3. Maximum Velocity on Mat or Coated Air Side: 5,000 ft/min.
4. Adhesive: UL listed waterproof type compliant with ASTM C916.
5. Fasteners: Duct liner galvanized steel pins, welded or mechanically fastened.

E. Polymide Foam Acoustic Duct Liner: Evonic Industries model SOLCOUSTIC, or equal, Flexible Blanket:

1. Greenguard certified, low VOC.
2. Polymide foam insulation with acrylic polymer airstream coating.
3. K' Value: ASTM C518, 0.30 Btu•in./(hr•ft²•ºF) at 75°F.
4. R' value per inch thickness: ASTM C518, 3.3 (hr•ft²•ºF) / Btu at 75°F.
5. Density: ASTM D 3574, 0.80 lb/ft3.
6. Water vapor sorbtion: ASTM C 1104, less than 2% by weight.
7. Fungal and bacteria resistance: ASTM G 21/22, no growth.
8. Noise Reduction Coefficient: ASTM C 423, 0.70 or higher based on "Type A mounting."
9. Maximum Velocity on Mat or Coated Air Side: 5,000 ft/min.
10. Maximum operating temperature: 250 degrees F.
11. Flame spread index: ASTM E84, less than 25
12. Smoke developed index: ASTM E84, less than 50
13. Adhesive: UL listed waterproof type compliant with ASTM C916.

14. Fasteners: Duct liner galvanized steel pins, welded or mechanically fastened.

F. Round Duct Liner: Johns Manville (No product available) with Anti-Microbial Treatment.

1. Application: Round duct lining for acoustic or thermal purposes.
2. 'K' Value: ASTM C518, 0.23 Btu•in./(hr•ft²•ºF) at 75°F.
3. Noise Reduction Coefficient: 0.70 as per ASTM C427. (Type A mounting.)
4. Maximum Velocity: 4,000 ft/min.

G. Hydrous Calcium Silicate: Schuller Thermo-12/Gold ASTM C533; Rigid Molded Block Insulation; Asbestos-Free Coded Throughout Material Thickness and Maintained Throughout Temperature Range:

1. "K" Value: 0.40 Btu•in./(hr•ft²•ºF) at 300ºF.
2. Maximum Service Temperature: 1,200°F.
3. Compressive Strength (block): Minimum of 200 psi to produce 5% compression at 1½" thickness.
4. Tie Bands: Secure blocks in places with staggered joints using ⅜" or ½" stainless steel bands on 12" centers.

H. Field Applied Jackets (For Exterior Applications):

1. Longitudinal seams shall not be located on top of ducts when exposed to outdoor environment.
2. Stainless Steel Jacket: Type 304 stainless steel, 0.010" minimum (smooth/corrugated) finish.
3. Aluminum Jacket: 0.016" aluminum with factory applied moisture barrier positioned such that the longitudinal overlap provides a watershed.
4. Circumferential joints shall be wide enough to provide weather-proofing jacket.
5. Secure jacket with ⅜" or ½" stainless steel bands on 12" centers.

I. Field Applied Jackets (For Interior Applications):

1. All longitudinal seams shall be located on bottom of ductwork
2. PVC Plastic: Johns Manville Zeston 2000. One piece molded type fitting covers and jacketing material, gloss white. Connect with tacks and pressure sensitive color matching vinyl tape.

2.3 FIRE-RATED INSULATION SYSTEMS

A. Insulation for Type I, commercial, kitchen hood exhaust ductwork. (See also Section 15880 Air Distribution referencing this Section).

B. Fire-Rated Board: Structural-grade, press-molded, xonolite calcium silicate, fireproofing board suitable for operating temperatures up to 1700 deg F (927 deg C). Comply with ASTM C 656, Type II, Grade 6. UL tested and certified to provide a 2-hour fire rating.

1. Products:

a. Johns Manville;
b. Super Firetemp M.

C. Fire-Rated Blanket: High-temperature, flexible, blanket insulation with FSK jacket that is UL tested and certified to provide a 2-hour fire rating.

1. Products:

a. CertainTeed Corp.; FlameChek.
b. Johns Manville; Firetemp Wrap.
c. Nelson Firestop Products; Nelson FSB Flameshield Blanket.
d. Thermal Ceramics; FireMaster Duct Wrap.

e. 3M; Fire Barrier Wrap 15A.
f. Unifrax Corporation; FyreWrap.
g. Vesuvius; PYROSCAT FP FASTR Duct Wrap.

2.4 PIPE INSULATIONS

A. Glass Fiber: Molded fibrous glass pipe insulation shall comply with the requirements of ASTM C 547 and meet ASTM C 585 for sizes required in the particular system. For all fluid distribution temperatures below 45°F the system shall be of a wicking type.

1. Non-Wicking:

a. Manufacturers:

1) Johns Manville Micro-Lok plain with PVC cover Meeting ASTM C547; or FSK faced Micro-Flex (pipe sizes larger than 18")
2) Knauf
3) einsulation

b. Applications: Insulation of piping up to 18" in diameter and 3" thick insulation.
c. 'K' Value: 0.23 at 75°F.
d. Maximum Service Temperature: 850°F.
e. Vapor Retarder Jacket: AP-T PLUS white kraft paper reinforced with glass fiber yarn and bonded to aluminum foil, secure with self sealing longitudinal laps and butt strips or AP jacket with outward clinch expanding staples or vapor barrier mastic as needed.

2. Wicking: Owens Corning VaporWick Meeting ASTM C547; Rigid Molded Noncombustible:

a. 'K' Value: 0.23 at 75°F.
b. Maximum Service Temperature: 850°F.
c. Jacket: Polymer facing with factory-applied adhesive closure to provide positive mechanical and vapor sealing of longitudinal seams.

B. Rigid polyisocyanurate foam: HiTHERM HT-300.

1. 'K' Value: 0.165 at 75°F (24°C)
2. Maximum Continuous Service Temperature: 300°F.
3. Vapor Retarder Jacket: Saran 540/SSL or Mylar laminate.

C. Hydrous Calcium Silicate: Johns Manville Thermo-12/Gold, ASTM C533; Rigid Molded Pipe:

1. 'K' Value: 0.40 at 300°F.
2. Maximum Service Temperature: 1,200°F.
3. Compressive Strength (block): Minimum of 200 psi to produce 5% compression at 1½" thickness.
4. Tie Wire: 16 gauge stainless steel with twisted ends on maximum 12" centers.

D. Cellular Glass: Pittsburgh-Corning Foamglas Meeting ASTM C522: Cellular Glass Thermal Insulation:

1. 'K' Value: 0.35 at 75°F.
2. Density: 8.0 lbs./cu. ft.
3. Maximum Service Temperature: 900°F.

E. Flexible Elastomeric Closed Cell Thermal Insulation: Armacel, Rubatex k-flex ECO, closed-cell, halogen free, elastomeric insulation. Comply with ASTM-C177, ASTM E 84 and UL 181.

1. 'K' Value: 0.27 at 75°F.
2. Density: 3.0 to 6.0 lbs./cu.ft.
3. Maximum Service Temperature: 260°F.
4. Seal all seams and joints with contact adhesive.

F. Field Applied Jackets (For Interior Applications):

1. All longitudinal seams shall be located on bottom of pipes.
2. PVC Plastic: Johns Manville Zeston 2000. One piece molded type fitting covers and jacketing material, gloss white. Connect with tacks and pressure sensitive color matching vinyl tape.
3. Canvas Jacket: UL listed fabric, 6 oz/sq. yd. plain weave cotton, treated with dilute fire retardant lagging adhesive.
4. Aluminum Jacket: 0.016" thick sheet, [smooth/embossed] finish, with longitudinal slip joints and 2" laps, die shaped fitting covers with factory attached protective liner.
5. Secure aluminum jackets with 3/8" or ½" stainless steel bands on 12" centers.

G. Field Applied Jackets (For Exterior Applications):

1. All longitudinal seams, on horizontal pipe runs, shall be installed on the bottom of pipes.
2. Aluminum Jacket: 0.016" (minimum) thick sheet, [smooth/embossed] finish, with longitudinal slip joints and 2" laps, die shaped fitting covers with factory attached protective liner.
3. Stainless Steel Jacket: Type 304 stainless steel, 0.010" minimum (smooth/corrugated) finish.
4. Secure stainless steel or aluminum jackets with ⅜" or ½" stainless steel bands on 12" centers.
5. Manufaturers: Pabco, Childers, RPR, or approved equal.

H. Removable Covers:

1. Provide removable covers on pumps, valves, air separators, vents, fittings, flanges, strainers, traps, etc., where periodic maintenance or removal of insulation may is required.
2. Use of premolded fittings with PVC covers is acceptable.
3. Use of lace-on type insulating blankets is acceptable.

2.5 EQUIPMENT INSULATIONS

A. Flexible Fiberglass Blanket: Johns Manville Microlite Type 75 Flexible Blanket:

1. 'K' Value: ASTM C518, 0.27 Btu•in./(hr•ft²•ºF) at 75°F installed full thickness.
2. Maximum Service Temperature: 250°F.
3. Density: 0.75 lb/cu ft.
4. Vapor Barrier Jacket: FSK (Foil-Scrim-Kraft) aluminum foil faced reinforced with fiberglass yarn and laminated to fire-resistant kraft, secured with UL listed pressure sensitive tape and/or outward clinched expanded staples and vapor barrier mastic as needed.

B. Rigid Fiberglass Board: Johns Manville Mat-Faced Micro-Aire Rigid Board:

1. 'K' Value: ASTM C518, 0.23 Btu•in./(hr•ft²•ºF) at 75°F.
2. Maximum Service Temperature: 250°F.
3. Density: 3.0 lb/cu ft.
4. Vapor Barrier Jacket: FSK (Foil-Scrim-Kraft) aluminum foil faced reinforced with fiberglass yarn and laminated to fire-resistant kraft, secured with UL listed pressure

sensitive tape and/or outward clinched expanded staples and vapor barrier mastic as needed.

5. Facing: 1” galvanized hexagonal wire mesh stitched on one face of insulation. (Optional.)

C. Rigid Fiberglass Board for High Temperature: Johns Manville 1000 Spin-Glas Meeting ASTM C612; Rigid, Noncombustible:

1. 'K' Value: ASTM C518, 0.23 Btu•in./(hr•ft²•ºF) at 75°F.
2. Maximum Service Temperature: 850°F.
3. Density: 3.0 lb/cu ft.
4. Facing: 1” galvanized hexagonal wire mesh stitched on one face of insulation. (Optional.)

D. Cellular Glass: Pittsburgh-Corning Foamglas Meeting ASTM C552; Cellular Glass Thermal Insulation:

1. 'K' Value: 0.35 at 75°F.
2. Density: 8.0 lb/cu. ft.
3. Maximum Service Temperature: 900°F.

E. Hydrous Calcium Silicate: Johns Manville Thermo-12/Gold Meeting ASTM C533; Rigid Molded Block; Asbestos-Free Coded Throughout Material Thickness and Maintained Throughout Temperature Range:

1. 'K' Value: 0.40 at 300°F.
2. Maximum Service Temperature: 1,200°F.
3. Compressive Strength (block): Minimum of 200 psi to produce 5% compression, based on 1½" thickness.
4. Securement: Insulation shall be securely banded in place, tightly butted, joints staggered and secured with 16 gauge galvanized or stainless steel wire or ½" x .015" galvanized steel bands on 12” maximum centers for large areas.

PART 3 - EXECUTION

3.1 EXAMINATION AND PREPARATION

A. Verify that piping and ductwork has been tested for leakage in accordance with specifications before applying insulation materials. All piping and ductwork shall be inspected by Owner's Representative prior to installation of insulation. Any insulation applied prior to inspection shall be removed and new insulation applied at no additional cost to Owner. Notify Owner's Representative five (5) working days prior to insulation installation.

B. Verify that all surfaces are clean, dry and free of foreign material.

3.2 INSTALLATION

A. General:

1. Install materials in accordance with manufacturer's recommendations, building codes and industry standards.
2. Remove and replace any insulation that has become wet or damaged during the construction process.
3. Continue insulation and vapor barrier at penetrations and duct supports, except where prohibited by code. Instances where this is required include:

a. Ductwork support angle or struts. To prevent crushing of low density insulation, provide separator or high density insulation at point of support. Vapor barrier to continue unbroken at point of support.

B. Ductwork –Insulation on the Duct Exterior:

1. Provide insulated ductwork conveying air below ambient temperature (below room temperature) with vapor retardant jacket. Seal all vapor retardant jacket seams and penetrations with UL listed tapes or vapor retardant adhesive.
2. Provide insulated ductwork conveying air above ambient temperature (above room temperature) with or without vapor retardant jacket. Where service access is required, bevel and seal ends of insulation.
3. All exposed exterior metallic ductwork exposed or covered with cladding is to be built with a crown to shed moisture.
4. Continue insulation through walls, sleeves, hangers, and other duct penetrations except where prohibited by code.
5. The insulation shall be firmly wrapped around the ducts with all joints lapped a minimum of 2". The vapor barrier shall be sealed with FSK or metallic pressure sensitive tape. Installed thickness shall not exceed 25% compression. Secure insulation with 16 gage soft annealed black or galvanized wire spaced not more than 12" on centers for straight runs of duct and 6" on centers for elbows and fittings
6. The underside of duct work 24” or greater in width shall be secured with mechanical fasteners and speed clips spaced approximately 18” on center. The protruding ends of the fasteners shall be cut off flush after the speed clips are installed, and then, when required, sealed with the same tape as specified above.
7. For ductwork exposed in mechanical equipment rooms below 7’ or in finished spaces, finish with Johns Manville Zeston 2000 PVC jacket or aluminum or stainless steel jacket.
8. For interior vapor/moisture duct applications, install fiberglass insulation unless specifically indicated otherwise on drawings. Install to meet manufacturer’s requirements and as required by local code authorities.
9. For exterior applications, provide insulation with a weather protection jacket.
10. For exterior vapor duct applications, install fiberglass insulation with weatherproof jacket.

C. Duct Liner:

1. Adhere insulation to sheet metal with a UL listed adhesive. Adhesive shall be applied to the sheet metal with a minimum coverage of 90%.
2. Secure insulation with mechanical liner fasteners as indicated by SMACNA or manufacturer. Pin length should be as recommended by the liner manufacturer.
3. All exposed edges of the liner must be factory or field coated. Unless factory coated, all transverse edges and longitudinal joints of the duct liner shall be coated. For systems operating at 4,000 fpm or higher, a metal nosing must be installed in all liner leading edges.
4. Repair liner surface penetrations with UL listed adhesive.
5. Duct dimensions indicated on plans are net inside dimensions required for airflow. Increase duct size to allow for insulation thickness.

D. Piping Insulation:

1. Locate insulation and cover seams in least visible locations unless otherwise specified.
2. Neatly finish insulation at supports, protrusions, and interruptions.
3. Provide insulated dual temperature pipes or cold pipes conveying fluids below ambient temperature with vapor retardant jackets with self sealing laps. Insulate complete system.

4. For insulated pipes conveying fluids above ambient temperature, secure jackets with self sealing lap or outward clinched, expanded staples. Seal ends of insulation at equipment, flanges, and unions.
5. Provide insert between support shield and piping on piping 1½" diameter or larger. Fabricate of Johns Manville Thermo-12, or other heavy density insulating material suitable for temperature. Insulation inserts shall not be less than the following lengths:

a.	1½" to 2½" pipe size	10" long
b.	3" to 6" pipe size	12" long
c.	8" to 10" pipe size	16" long
d.	12" and over	22" long

6. Use of metal saddles is acceptable as specified in Section 230500. Fill interior voids with segments of insulation matching adjoining pipe insulation.
7. Use of pipe hangers designed as an insulation coupling is acceptable in lieu of saddles and other devices. Klo-Shure coupling or equal.
8. For pipe exposed in mechanical equipment rooms or in finished spaces below 7 feet above finished floor, finish with Johns Manville Zeston 2000 PVC jacket and fitting covers, or aluminum or stainless steel jacket.
9. Where pumps, valves, strainers, etc., with insulation require periodic opening for maintenance, repair, or cleaning, install insulation in such a manner that it can be easily removed and replaced without damage. Use of premolded covers or lace-on type insulation blankets is required.
10. For exterior applications:
    a. Provide weather protection jacket. Insulated pipe lengths, pumps, fittings, joints, and valves shall be covered with aluminum jacket or stainless steel jacket. Jacket seams shall be located on bottom side of horizontal piping. All lateral joints shall be caulked with a minimum 20-year silicone sealant (clear). All longitudinal joints, except those at the bottom of a horizontal pipe run, shall be caulked with a minimum 20-year silicone sealant (clear).
    b. Apply weather-resistant protective finish such as WB Armaflex to flexible elastomeric insulation. Insulation seams shall be located on the bottom side of horizontal piping. All lateral and longitudinal joints to be sealed with low V.O.C., UV inhibitive adhesive, such as Armaflex 520 BLV adhesive.
11. For underground installations, install per manufacturer's written instructions and recommendations.
12. When maintenance or service access for equipment will result in foot traffic over floor mounted insulated piping the contractor is to fabricate a permanent removable walkway to prevent damage to the piping and insulation.

E. Equipment Insulation:

1. See Piping Insulation above for additional requirements.
2. Apply insulation as close as possible to equipment by grooving, scoring, and beveling insulation, if necessary. Secure insulation to equipment with studs, pins, clips, adhesive, wires, or bands, per manufacturer's recommendations.
3. Fill joints, cracks, seams, and depressions with bedding compound to form smooth surface. On cold equipment, use vapor retardant cement.
4. Provide insulated dual temperature equipment or cold equipment containing fluids below ambient temperature with vapor retardant jackets.
5. For insulated equipment containing fluids above ambient temperature, provide jacket with or without vapor barrier.
6. Cover insulation with metal mesh and finish with heavy coat of insulating cement, mastic, or aluminum jacket as indicated in the drawings.

7. For equipment in mechanical equipment rooms or in finished spaces, finish with Johns Manville Zeston 2000 jacketing and fitting covers or aluminum or stainless steel jacketing.
8. Do not insulate over nameplate or ASME stamps. Bevel and seal insulation around such.
9. When equipment with insulation requires periodic opening for maintenance, repair, or cleaning, install insulation in such a manner that it can be easily removed and replaced without damage. Use of lace-on type insulation blankets is acceptable.

3.3 DUCTWORK INSULATION SCHEDULE

A. All insulation thicknesses shall meet or exceed state energy code and mechanical code requirements as noted below. Minimum thermal resistance in range of 4.2 to 4.6 per inch of thickness. Insulation thicknesses are based on fiberglass insulation and may be adjusted for equivalent insulation values for materials with superior “K” factors.

B. All air distribution system ducts and plenums, but not limited to, building cavities, mechanical closets, air handler boxes, and support platforms uses as ducts or plenums, shall be installed, sealed , and insulated to meet the requirements of the code. Portions of supply-air and return-air ducts conveying heated or cooled air located in one or more of the following spaces shall be insulated to a minimum level of R-8.

1. In a space between the roof and an insulated ceiling.
2. In a space directly under a roof with fixed vents or opening to the outside or unconditioned spaces
3. In an unconditioned crawlspace.
4. In other unconditioned spaces.

C. Flexible Fiberglass

	THICKNESS (inches)	FINISH	REMARKS
Supply ducts within building envelope	1-1/2	FSK	
Supply or return duct installed as exposed ductwork in the occupied space.	0		Except where noted on drawings for acoustical reasons
Return ducts within building envelope	1-1/2	FSK	
Exterior/Outside supply and return ductwork sandwiched in double wall sheet metal	2-1/2	FSK	* or a thickness resulting in compressed R value=8
Supply and return ductwork located as described in 3.3.B above.	2		
Exhaust ducts within 10 ft. of exterior openings	2	FSK	
Exhaust ducts and ventilation equipment casing exposed to outdoor air	2	FSK	

D. Thicknesses in the above table shall have insulation values as follows: 1-1/2” = R-6, 2” = R-8.0, 3” = R-12. Greater thicknesses are permitted to achieve identical values if space constraints allow.

E. Rigid Fiberglass

	THICKNESS	FINISH	REMARKS

	(inches)		
Outside air intake ducts	1-1/2	FSK	
Interior Plenums	1-1/2	FSK	
Exterior Plenums	2	FSK	
Supply, return and relief ducts in mechanical rooms and parking garages	2	FSK	
Vapor/moisture ducts installed exterior to the building envelope.	1-1/2	FSK	Provide jacketing on exterior ducts
Exterior ductwork sandwiched in double wall sheet metal	2	FSK	

F. Duct Liner:

	THICKNESS (inches)	FINISH	REMARKS
Where indicated	1" unless otherwise noted on plans	Linacoustic	
Exterior ductwork in sandwiched in double wall sheet metal	2	Linacoustic	
Within 20' of Air Handling Unit in supply and return ducts	1	Refectix Natural Fiber	
Within 20' of Air Handling Unit in supply and return ducts	1	Solcoustic	

G. Duct Liner (round):

	THICKNESS (inches)	FINISH	REMARKS
Where indicated	1	Spiracoustic	

3.4 PIPING INSULATION SCHEDULE

A. All insulation thicknesses shall meet or exceed state energy code requirements as noted below. Increase thickness ½" if exposed to exterior ambient air. Minimum thermal resistance in range of 4.2 to 4.6 per inch of thickness. Insulation thicknesses are based on fiberglass insulation and may be adjusted for equivalent insulation values for materials with superior "K" factors.

B. Fiberglass Insulation

	PIPE SIZE (inches)	THICKNESS (inches)	REMARKS
Heating water supply and return systems and fittings	Up to 1-½ 1-½ and over	1 ½ 3	
Chilled water supply and return systems and fittings. (44°F and above)	Up to 1 ½ 1 ½ and over	1 ½ 2	
Condenser water supply and return systems and fittings	All Sizes	1	
Piping exposed to freezing	All Sizes	1 ½	
H.P. steam over 60 psi (306°F +)	Up to 1-½ 1-½ and over	1 ½ 3	
M.P. steam 16-60 psi (251-	Up to 1-½	1 ½	

305°F)	1-½ and over	3	
L.P. steam 0-15 psi (201-250°F)	Up to 1-½ 1-½ and over	1 ½ 3	
Condensate return piping	All Sizes	1	
Plumbing vents within 10 feet of the exterior in freezing climates	All Sizes	1	
Misc. drains from electric water coolers, ice machines, etc.	All Sizes	1	
HW and Steam Valves	2 ½" and over	1 ½	Fiberglass and lagging

C. Elastometric Foam (Closed Cell):

	PIPE SIZE (inches)	THICKNESS (inches)	REMARKS
Condensate drain pipes	All Sizes	1/2	
Refrigerant suction and hot-gas piping	All Sizes	3/4	Provide aluminum jacket on exterior insulated piping.
Refrigerant liquid piping	All Sizes	3/4	Provide on all piping concealed in structure and close proximity to likely human contact.

D. Cellular Glass:

	PIPE SIZE (inches)	THICKNESS (inches)	REMARKS
Chilled water supply and return systems and fittings. (40°F and above)	Up to 2 2 ½ and over	3 3	

3.5 EQUIPMENT INSULATION SCHEDULE

A. Flexible Fiberglass Blanket

	THICKNESS (inches)	REMARKS
Heat exchangers/converters	1 ½	
Expansion/Compression tanks	1 ½	
Air separators	1 ½	
Chilled water pump bodies	1 ½	
Condensate pump receivers	1	

B. Rigid Fiberglass Board:

	THICKNESS (inches)	REMARKS
Heating hot water pumps	2	

C. Flexible Elastomeric Foam (Closed Cell):

	THICKNESS (inches)	REMARKS
Cold water storage tank	1 ½	
Chilled water pump bodies	1 ½	

D. Calcium Silicate:

	THICKNESS (inches)	REMARKS
Engine exhaust mufflers and piping	4	Provide jacketing

Steam Condensate Receivers	2	Provide jacketing

END OF SECTION

SECTION 23 09 00 – INSTRUMENTATION AND CONTROL FOR BMS

PART 1 - GENERAL

1.1 SCOPE OF WORK

A. The Building Automation System (BAS) manufacturer shall furnish and install a fully integrated building automation system as an extension to the existing Siemens Apogee System, in the Public Safety Building to match the City's standard incorporating direct digital control (DDC) for energy management, equipment monitoring and control, and subsystems as herein specified. The installation of the control system shall be performed under the direct supervision of the controls manufacturer with the shop drawings, flow diagrams, bill of materials, component designation or identification number and sequence of operation all bearing the name of the manufacturer. The installing contractor shall certify in writing, that the equipment manufacturer has prepared the shop drawings and that the equipment manufacturer has supervised their installation. In addition, the equipment manufacturer shall certify, in writing, that their company prepared the shop drawings and that all temperature control equipment was installed under their direct supervision.

B. All materials and equipment used shall be standard components, regularly manufactured for this and/or other systems and not custom designed specially for this project. All systems and components shall have been thoroughly tested and proven in actual use for at least two years.

C. BAS manufacturer shall be responsible for all BAS wiring for a complete and operable system. All wiring shall be done in accordance with all local/national codes and Division 16. All exposed low voltage control wiring throughout the building shall be run in conduit. Low voltage electrical wiring above ceiling may be run in plenum cable. Room sensor cables concealed behind walls shall be run in conduit, with room sensor conduit extending above wall into accessible ceiling. Cable is to be supported off building structure. Support off ductwork, pipe racks, etc. is not acceptable.

1.2 WORK BY OTHER DISCIPLINES

A. Mechanical Contractor provides:

1. Install all in line devices
2. All package unit control panels.
3. Provide smoke dampers, control dampers, fire/smoke dampers, outdoor air, return air, exhaust air, and vent dampers; with adjacent access doors.
4. Furnish & Install of any Air Flow Measuring Stations & matching transmitters.
5. Factory installation of DDC VAV/CV Box Controllers.

B. Electrical Contractor provides:

1. 120 volt and 20 amp circuits and circuit breakers from normal and/or emergency power panel to all direct digital system panels
2. Wiring of all power feeds through all disconnects starters to electrical motor.
3. Wiring of any remote start/stop switches and manual or automatic motor speed control devices not furnished by BAS manufacturer
4. Wiring of all power feeds through all disconnects all fire/smoke dampers.
5. Wiring of all interlocks shown on plans
6. Other conduits shown on plans
7. Duct smoke detectors and their wiring

1.3 RELATED WORK

A. Division 01000 General and Special Conditions

B. Division 15000 Mechanical
C. Division 16000 Electrical

1.4 GENERAL PRODUCT DESCRIPTION

1. The building automation system (BAS) shall be SIEMENS Apogee System.
2. The building automation system shall consist of the following:
   a. Stand-alone DDC Controllers (PXC)
   b. Stand-alone Application Specific Controllers (TECs)
3. The system shall be modular in nature and shall permit expansion of both capacity and functionality through the addition of sensors, actuators, DDC Controllers, Application Specific Controllers, and operator devices.
4. DDC Controller shall operate independently by performing its own specified control, alarm management, operator I/O, and data collection. The failure of any single component or network connection shall not interrupt the execution of control strategies at other operational devices.
5. DDC Controllers shall be able to access any data from, or send control commands and alarm reports directly to, any other DDC Controller or combination of controllers on the network without dependence upon a central processing device.

1.5 QUALITY ASSURANCE

A. The BAS system shall be designed and installed, commissioned and serviced by manufacturer employed personnel. Manufacturer shall have an in-place support facility within 75 miles of the site with technical staff, spare parts inventory and necessary test and diagnostic equipment. Distributors, wholesalers, or licensed installing Mechanical contractors shall not be acceptable.
The manufacturer shall provide an experienced project manager for this work, responsible for direct supervision of the design, installation, and start up and commissioning of the BAS. The Bidder shall be regularly engaged in the manufacturing, installation, and maintenance of BAS systems and shall have a minimum of ten (10) years of demonstrated technical expertise and experience in the manufacture, installation and maintenance of BAS systems similar in size and complexity to this project, a maintained service organization consisting of at least ten (10) competent servicemen for a period of not less than ten years and the provide a list of 10 projects, similar in size and scope to this project, completed within the last five years.
B. Materials and equipment shall be the catalogued products of manufacturers regularly engaged in production and installation of automatic temperature control systems and shall be manufacturer's latest standard design that complies with the specification requirements.
C. BAS shall be listed under UL 916 PAZX and 864 UDTZ, UUKL**,** and other subsystem listings as applicable, and herein specified, and be so listed at the time of bid.
D. All electronic equipment shall conform to the requirements of FCC Regulation, Part 15, Section 15, and Governing Radio Frequency Electromagnetic Interference and be so labeled.

1.6 SUBMITTALS

A. Submit complete sets of documentation in the following phased delivery schedule:
   1. Valve and damper schedules
   2. Equipment data cut sheets
   3. System schematics, including:
      a. System Architecture Diagram showing all master panels/locations, network wiring, and workstations.

b. System Zone Architecture Diagram showing all zone controllers, network wiring and power wiring.
c. Detailed DDC Panel Termination Diagrams showing all I/O associated with DDC Panel.
d. Detailed Field Interface Panel Diagrams showing all equipment, interlocks, terminations, etc.
e. Wiring Details (interlocks, relays, etc.) for all systems as required.
f. Detailed Control Diagrams of each system controlled. Diagrams are to include all I/O, Point Names, Interlocks, and tubing required to meet the sequence of operations.
g. Instrument Index that lists every physical point on the project, the point address, point name and alarm parameters.
h. Detailed Sequence of operations for each major system. The sequence is to include all physical point names and any commendable virtual points used in the control of the system. Each piece of equipment shall have a unique sequence developed. Zones and Exhaust Fans may be described by generic "typical" sequences.

4. Auto-CAD compatible as-built drawings

B. Upon project completion, submit operation and maintenance manuals, consisting of the following:

1. Index sheet, listing contents in alphabetical order
2. Manufacturer's equipment parts list of all functional components of the system, Auto-CAD disk of system schematics, including wiring diagrams
3. Description of sequence of operations
4. As-Built interconnection wiring diagrams
5. Operator's Manual
6. Trunk cable schematic showing remote electronic panel locations, and all trunk data
7. List of connected data points, including panels to which they are connected and input device (ionization detector, sensors, etc.)
8. Conduit riser diagrams

1.7 WARRANTY

A. Provide all services, materials and equipment necessary for the successful operation of the entire BAS system for a period of one year after beneficial use.
B. The adjustment, required testing, and repair of the system includes all computer equipment, transmission equipment and all sensors and control devices.
C. The on-line support services shall allow the local BAS subcontractor to connect over the Internet to monitor and control the facility's building automation system. This remote connection to the facility shall be within 2 hours of the time that the problem is reported. This coverage shall be extended to include normal business hours. Internet connection & ISP provided by Owner
D. Provide to the Owner during warranty a proposal for maintenance & service.

PART 2 - PRODUCTS

2.1 ACCEPTABLE MANUFACTURERS

A. The contractor shall use the Siemens Apogee System. No other manufacture shall be accepted. This item is being soled sourced per Public Contract Code Section 3400, subdivision (b) (2) to match equipment in use at the project either completed or in the course of completion.
B. Siemens Building Technologies, Inc. (714) 816-1426, David Gorevitz

C. No substitutions shall be accepted. No known equal.

2.2 DDC CONTROLLER FLOOR LEVEL NETWORK:

A. This level communication shall support a family of application specific controllers and shall communicate with the peer-to-peer network through DDC Controllers for transmission of global data.

2.3 DDC & HVAC MECHANICAL EQUIPMENT CONTROLLERS

A. The DDC & HVAC Mechanical Equipment Controllers shall reside on the Building Level Network.
B. DDC & HVAC Mechanical Equipment Controllers shall use the same programming language and tools. DDC & HVAC Mechanical Equipment controllers, which require different programming language or tools, are not acceptable.

2.4 HVAC MECHANICAL EQUIPMENT CONTROLLERS (PXC)

A. HVAC Mechanical Equipment Controllers shall be a 12-bit stand-alone, multi-tasking, multi-user; real-time digital control processors consisting of modular hardware with plug-in enclosed processors.
B. Each HVAC Mechanical Controller shall have sufficient memory to support its own operating system and databases, including:

1. Control processes
2. Energy management applications
3. Alarm management applications including custom alarm messages for each level alarm for each point in the system.
4. Historical/trend data for points specified
5. Maintenance support applications
6. Custom processes
7. Operator I/O
8. Dial-up communications

C. Each HVAC Mechanical Equipment Controller shall support firmware upgrades without the need to replace hardware.
D. HVAC Mechanical Equipment Controllers shall provide a RS-232C serial data communication port for operation of operator I/O devices such as industry standard printers, operator terminals, modems and portable laptop operator's terminals.
E. HVAC Mechanical Equipment Controllers shall provide local LED status indication for each digital input and output for constant, up-to-date verification of all point conditions without the need for an operator I/O device. HOA switches shall also be provided on all equipment controllers used for smoke control.
F. Each HVAC Mechanical Equipment Controller shall continuously perform self-diagnostics, communication diagnosis and diagnosis of all components. The HVAC Mechanical Equipment Controller shall provide both local and remote annunciation of any detected component failures, low battery conditions or repeated failure to establish communication.
G. Isolation shall be provided at all peer-to-peer network terminations, as well as all field point terminations to suppress induced voltage transients consistent with IEEE Standards 587-1980.
H. In the event of the loss of normal power, there shall be an orderly shutdown of all HVAC Mechanical Equipment Controllers to prevent the loss of database or operating system software. Non-volatile memory shall be incorporated for all critical controller configuration data and battery backup shall be provided to support the real-time clock and all volatile memory for a minimum of 72 hours.

1. Upon restoration of normal power, the HVAC Mechanical Equipment Controller shall automatically resume full operation without manual intervention.
2. Should HVAC Mechanical Equipment Controller memory be lost for any reason, the user shall have the capability of reloading the HVAC Mechanical Equipment Controller via the local RS-232C port, via telephone line dial-in or from a Ethernet connection.

2.5 DDC & HVAC MECHANICAL EQUIPMENT CONTROLLER RESIDENT SOFTWARE FEATURES

A. .General:

1. The software programs specified in this Section shall be provided as an integral part of DDC and HVAC Mechanical Equipment Controllers and shall not be dependent upon any higher-level computer for execution.
2. All points shall be identified by up to 30-character point name and 16-character point descriptor.
3. All digital points shall have user defined two-state status indication (descriptors with minimum of 8 characters allowed per state (i.e. summer/winter)).

B. Control Software Description:

1. The DDC and HVAC Mechanical Equipment Controllers shall have the ability to perform the following pre-tested control algorithms:

a. Two-position control
b. Proportional control
c. Proportional plus integral control
d. Proportional, integral, plus derivative control
e. Automatic tuning of control loops

C. DDC and HVAC Mechanical Equipment Controllers shall provide the following energy management routines for the purpose of optimizing energy consumption while maintaining occupant comfort.

1. Start-Stop Time Optimization (SSTO) shall automatically be coordinated with event scheduling. The SSTO program shall start HVAC equipment at the latest possible time that will allow the equipment to achieve the desired zone condition by time of occupancy. The SSTO program shall also shut down HVAC equipment at the earliest possible time before the end of the occupancy period, and still maintain desired comfort conditions.

a. The SSTO program shall operate in both the heating and cooling seasons.

1) It shall be possible to apply the SSTO program to individual fan systems.
2) The SSTO program shall operate on both outside weather conditions as well as inside zone conditions and empirical factors.

b. The SSTO program shall meet the local code requirements for minimum outside air while the building is occupied.

2. Event Scheduling: Provide a comprehensive menu driven program to automatically start and stop designated points or groups of points according to a stored time.

a. It shall be possible to individually command a point or group of points.
b. For points assigned to one common load group, it shall be possible to assign variable time delays between each successive start or stop within that group.
c. The operator shall be able to define the following information:

1) Time, day

2) Commands such as on, off, auto, and so forth.
3) Time delays between successive commands.
4) There shall be provisions for manual overriding of each schedule by an appropriate operator.

d. It shall be possible to schedule events up to one year in advance.

1) Scheduling shall be calendar based.
2) Holidays shall allow for different schedules.

3. Enthalpy switchover (economizer) .The Energy Management Control Software (EMCS) will control the position of the air handler relief, return, and outside air dampers. If the outside air-dry bulb temperature falls below changeover set point the EMCS will modulate the dampers to provide 100 percent outside air. The user will be able to quickly changeover to an economizer system based on dry bulb temperature and will be able to override the economizer cycle and return to minimum outside air operation at any time.
4. Temperature-compensated duty cycling.

a. a)The DCCP (Duty Cycle Control Program) shall periodically stop and start loads according to various patterns.
b. The loads shall be cycled such that there is a net reduction in both the electrical demands and the energy consumed.

5. Automatic Daylight Savings Time Switchover: The system shall provide automatic time adjustment for switching to/from Daylight Savings Time.
6. Night setback control: The system shall provide the ability to automatically adjust set points for night control.
7. The Peak Demand Limiting (PDL) program shall limit the consumption of electricity to prevent electrical peak demand charges.

a. PDL shall continuously track the amount of electricity being consumed, by monitoring one or more electrical kilowatt-hour/demand meters. These meters may measure the electrical consumption (kWh), electrical demand (kW), or both.
b. PDL shall sample the meter data to continuously forecast the demand likely to be used during successive time intervals.
c. If the PDL forecasted demand indicates that electricity usage is likely to exceed a user preset maximum allowable level, then PDL shall automatically shed electrical loads.
d. Once the demand peak has passed, loads that have been shed shall be restored and returned to normal control.

D. DDC and HVAC Mechanical Equipment Controllers shall be able to execute custom, job-specific processes defined by the user, to automatically perform calculations and special control routines.

1. A single process shall be able to incorporate measured or calculated data from any and all other DDC and HVAC Mechanical Equipment Controllers on the network. In addition, a single process shall be able to issue commands to points in any and all other DDC and HVAC Mechanical Equipment Controllers on the network. Database shall support 30 characters, English language point names, structured for searching and logs.
2. Processes shall be able to generate operator messages and advisories to operator I/O devices. A process shall be able to directly send a message to a specified device or cause the execution of a dial-up connection to a remote device such as a printer or pager.

3. DDC and HVAC Mechanical Equipment Controller shall provide a HELP function key, providing enhanced context sensitive on-line help with task-orientated information from the user manual.
4. DDC and HVAC Mechanical Equipment Controller shall be capable of comment lines for sequence of operation explanation.

E. Alarm management shall be provided to monitor and direct alarm information to operator devices. Each DDC and HVAC Mechanical Equipment Controller shall perform distributed, independent alarm analysis and filtering to minimize operator interruptions due to non-critical alarms, minimize network traffic and prevent alarms from being lost. At no time shall the DDC and HVAC Mechanical Equipment Controllers ability to report alarms be affected by either operator or activity at a PC workstation, local I/O device, or communications with other panels on the network.

1. All alarm or point change reports shall include the point's English language description and the time and date of occurrence.
2. The user shall be able to define the specific system reaction for each point. Alarms shall be prioritized to minimize nuisance reporting and to speed operator response to critical alarms. A minimum of six priority levels shall be provided for each point. Point priority levels shall be combined with user definable destination categories (PC, printer, DDC Controller, etc.) to provide full flexibility in defining the handling of system alarms. Each DDC and HVAC Mechanical Equipment Controller shall automatically inhibit the reporting of selected alarms during system shutdown and start-up. Users shall have the ability to manually inhibit alarm reporting for each point.
3. Alarm reports and messages will be directed to a user-defined list of operator devices or PCs based on time (after hour’s destinations) or based on priority.
4. In addition to the point's descriptor and the time and date, the user shall be able to print, display or store a 200 character alarm message to more fully describe the alarm condition or direct operator response.

F. A variety of historical data collection utilities shall be provided to manually or automatically sample, store and display system data for points as specified in the I/O summary.

1. Any point, physical or calculated may be designated for trending. Any point, regardless of physical location in the network, may be collected and stored in each DDC and HVAC Mechanical Equipment Controllers point group. Two methods of collection shall be allowed: either by a pre-defined time interval or upon a pre-defined change of value. Sample intervals of l minute to 7 days shall be provided. Each DDC and HVAC Mechanical Equipment Controller shall have a dedicated RAM-based buffer for trend data and shall be capable of storing a data samples.
2. DDC and HVAC Mechanical Equipment Controllers shall also provide high-resolution sampling capability for verification of control loop performance. Operator-initiated automatic and manual loop tuning algorithms shall be provided for operator-selected PID control loops as identified in the point I/O summary.
    a. Loop tuning shall be capable of being initiated either locally at the DDC and HVAC Mechanical Equipment Controller, from a network workstation or remotely using dial-in modems. For all loop-tuning functions, access shall be limited to authorized personnel through password protection.

G. DDC and HVAC Mechanical Equipment Controllers shall be capable of automatically accumulating and storing run-time hours for digital input and output points and automatically sample, calculate and store consumption totals for analog and digital pulse input type points, as specified in the point I/O schedule.

H. DDC and HVAC Mechanical Equipment Controllers shall automatically sample, calculate and store consumption totals on a daily, weekly or monthly basis for user-selected analog and digital pulse input type points as specified in the point I/O summary.

   a. Tantalization shall provide calculation and storage of accumulations of up to 99,999.9 units (e.g., KWH, gallons, BTU, tons, etc.).
   b. The totalization routine shall have a sampling resolution of one minute or less.
   c. The user shall have the ability to define a warning limit. Unique, user-specified messages shall be generated when the limit is reached.

I. DDC and HVAC Mechanical Equipment Controllers shall have the ability to count events such as the number of times a pump or fan system is cycled on and off. Event totalization shall be performed on a daily, weekly, or monthly basis for points as specified in the point I/O summary.

   1. The event totalization feature shall be able to store the records associated with a minimum of 9,999.9 events before reset.
   2. The user shall have the ability to define a warning limit. Unique, user-specified messages shall be generated when the limit is reached.

J. The peer to peer network shall allow the DDC and HVAC Mechanical Equipment Controllers to access any data from or send control commands and alarm reports directly to any other DDC and HVAC Mechanical Equipment Controller or combination of controllers

K. The peer-to-peer network shall allow the DDC and HVAC Mechanical Equipment Controllers to assign a minimum of 50 passwords access and control priorities to each point individually. The logon password shall enable the operator to monitor, adjust, and control the points that the operator is authorized for.

L. Existing Apogee Operator workstation at the Public Safety Building shall be programmed to allow monitor & control of all of the new points provided under this contract. New graphics shall also be provided. Provide a LAPTOP as a remote operator's terminal.

M. M. Existing Siemens RENO system shall be programmed to allow notification of new alarms provided under this contract

2.6 FLOOR LEVEL NETWORK APPLICATION SPECIFIC CONTROLLERS (ASC)

A. Each DDC Controller shall be able to extend its performance and capacity through the use of remote application specific controllers (ASCs) through Floor Level LAN Device Networks.

B. Each ASC shall operate as a stand-alone controller capable of performing its specified control responsibilities independently of other controllers in the network. Each ASC shall be a microprocessor-based, multi-tasking, and real-time digital control processor. Provide the following types of ASCs as a minimum:

   1. Central System Controllers
   2. Terminal Equipment Controllers
   3. Package Units
   4. Each ASC shall be capable of control of the terminal device independent of the manufacturer of the terminal device.

C. Central System Controllers:

   1. Controllers shall include all point inputs and outputs necessary to perform the specified control sequences. As a minimum, 20% of the point inputs and outputs shall be of the Universal type, allowing for additional system flexibility. In lieu of Universal inputs and outputs, provide a minimum of 20% spare points of each type via additional point termination boards or controllers.
   2. Each controller shall support its own real-time operating system. Provide a time clock with battery backup to allow for stand-alone operation in the event

communication with its DDC Controller is lost and to insure protection during power outages.

3. All programs shall be field-customized to meet the user's exact control strategy requirements. Central System controllers utilizing pre-packaged or canned programs shall not be acceptable. As an alternative, provide DDC Controllers for all central equipment in order to meet custom control strategy requirements.
4. Programming of central system controllers shall utilize the same language and code as used by DDC Controllers to maximize system flexibility and ease of use. Should the system controller utilize a different control language, provide a DDC Controller to meet the specified functionality.
5. Each controller shall have connection provisions for a portable operator's terminal. This tool shall allow the user to display, generate or modify all point databases and operating programs.
6. Provide a door-mounted portable interface terminal or lap top to allow for direct-user access to the controller.

    a. The terminal shall provide the user with the following functionality as a minimum:

        1) View and set date and time
        2) Modify and override time-of-day schedules
        3) View points and alarms
        4) Monitor points
        5) Command and modify set points

    b. Should the system controller be unable to interface to a door-mounted terminal, provide a laptop or similar terminal at the controller, or provide a DDC Controller with a door-mounted or local terminal in lieu of the system controller in order to meet the specified minimum functionality.

D. Terminal Equipment Controllers:

1. Provide for control of each piece of equipment, including, but not limited to, the following:

    a. Split Units
    b. Package AC units
    c. Exhaust Fans

2. Controllers shall include all point inputs and outputs necessary to perform the specified control sequences. Analog outputs shall be industry standard signals such as 24V floating control, 0-10v, allowing for interface to a variety of modulating actuators.
3. All controller sequences and operation shall provide closed loop control of the intended application. Closing control loops over the FLN, BLN or MLN is not acceptable

2.7 FIELD DEVICES

A. Provide instrumentation as required for monitoring, control or optimization functions.
B. Thermostats

1. Room thermostats shall be of the gradual acting type with adjustable sensitivity.
2. They shall have a bi-metal sensing element capable of responding to a temperature change of one-tenth of one degree. (Provide all thermostats with limit stops to limit adjustments as required.)
3. Thermostats shall be arranged for either horizontal or vertical mounting.
4. In the vertical position thermostat shall fit on a mullion of movable partitions without overlap.

5. Tamper Proof Flush mounted room sensors Siemens Product no. 544-374, shall be mounted for secured areas, as directed by the Owner.
6. Room Thermostats shall be Siemens Series 1000 for CAV and VAV units.
7. Electric Low voltage Wall Thermostat with on-off sub base Siemens Model no. 141, Electric Low Voltage Wall heat/cool room Thermostat with universal control. The thermostat shall have exposed bimetal thermometer and set point adjustment. Heat/Off/Cool and Fan/Auto/On switches.
8. Provide thermostat guards as shown on the plans

C. Temperature Sensors

1. Digital room sensors shall have LCD display, day / night override button, and set point slide adjustment override options. The set point slide adjustment can be software limited by the automation system to limit the amount of room adjustment.

   a. Temperature monitoring range+20/120°F (-13° to 49°C)
   b. Output signalchanging resistance
   c. Accuracy at Calibration point±0.5°F (+/- 0.3°C)
   d. Set Point and Display Range55° to 95°F (13° to 35°C)

2. Duct (single point) temperature:

   a. Temperature monitoring range+20/120°F (-7°/49°C)
   b. Output signalchanging resistance
   c. Accuracy at Calibration point±0.5°F (+/-0.3°C)

3. Duct Average temperature:

   a. Temperature monitoring range+20° ±120°F (-7°/+49°C)
   b. Output signal4 – 20 ma DC
   c. Accuracy at Calibration point±0.5°F (±03°C)
   d. Sensor Probe Length25’ L (7.3m)

4. Outside air temperature:

   a. Temperature monitoring range -58°±122° F (-50ºCto+50ºC)
   b. Output signal4 – 20 ma DC
   c. Accuracy at Calibration point±0.5°F (+/-0.3°C)

D. Differential pressure:

1. Unit for fluid flow proof shall be Penn P74.

   a. Range 8 to 70 psi
   b. Differential3 psi
   c. Maximum differential pressure200 psi
   d. Maximum pressure325 psi

2. Unit for airflow shall be Siemens Building Technologies SW141.

   a. Set point ranges:0.5” WG to 1.0” WG(124.4 to 248.8 Pa)
   b. 1.0” WG to 12.0” WG(248.8 to 497.6 Pa)

E. Static pressure sensor:

1. Range0 to .5” WG (0 to 124.4 Pa)
2. 0 to 1” WG (0 to 248.8 Pa)
3. 0 to 2” WG (0 to 497.7 Pa)
4. 0 to 5” WG (0 to 1.2 kPa
5. 0 to 10” WG (0 to 2.5 kPa)
6. Output Signal4 – 20 ma VDC
7. Combined static error0.5% full range

8. Operating Temperature-40º to 175º F (-40C to 79.5ºC)

F. Air Pressure Sensor:

1. Range:0 to 0.1 in. water (0 to 24.9 Pa)
2. 0 to 0.25 in. water (0 to 63.2 Pa)
3. 0 to 0.5 in. water (0 to 124.5 Pa)
4. 0 to 1.0 in. water (o to 249 Pa)
5. 0 to 2.0 in water 90 to 498 Pa)
6. 0 to 5.0 in. water (0 to 1.25 kPa)
7. 0 to 10.0 in. water (0 to 2.49 kPa)
8. Output signal4 to 20 ma
9. Accuracy±1.0% of full scale

G. Control Valves (all control valves shall have electric actuators).

1. Electric Control
2. Range ability40:1
3. Flow CharacteristicsModified. Equal percentage
4. Control ActionNormal open or closed as selected
5. MediumSteam, water, glycol
6. Body TypeScrewed ends 2” and smaller, flanged
7. Valves 2½” and larger
8. Body MaterialBronze
9. Body TrimBronze
10. StemStainless Steel
11. Actuator0-10 VDC, 4-20 MA or 2 positions
12. 24 VAC/120VAC

All automatic temperature control valves in water lines shall be provided with Characterized throttling plugs and shall be sized for minimum 25% of the system pressure drop or 5 psi, whichever is less.

H. Damper Actuators

1. All Automatic dampers shall have electric actuators.
2. Damper actuators shall be Brush less DC Motor Technology with stall protection, bi-directional, fail safe spring return, all metal housing, manual override, independently adjustable dual auxiliary switch. The actuator assembly shall include the necessary hardware and proper mounting and connection to a standard ½” diameter shaft or damper blade.
3. Actuators shall be designed for mounting directly to the damper shaft without the need for connecting linkages.
4. All actuators having more than 100 lb-in torque output shall have a self-centering damper shaft clamp that guarantees concentric alignment of the actuator’s output coupling with the damper shaft. The self-centering clamp shall have a pair of opposed “v” shaped toothed cradles; each having two rows of teeth to maximize holding strength. A single clamping bolt shall simultaneously drive both cradles into contact with the damper shaft.
5. All actuators having more than a 100 lb-in torque output shall accept a 1” diameter shaft directly, without the need for auxiliary adapters.
6. All actuators shall be designed and manufactured using ISO9000 registered procedures, and shall be UL873 and CSA22.2 listed.

I. AIRFLOW MEASURING STATIONS

1. Provide in the ductwork where indicated, airflow measuring station(s) capable of continuously monitoring the fan or duct capacities (air volumes) they serve.

2. Each airflow measuring station shall contain multiple total and static pressure sensors positioned at the center of equal and symmetrical areas of the station cross-section, and interconnected by their respective averaging manifolds. For stations of 4 square feet or smaller, one total pressure sensor shall be present for every 16 square inches of station area. Midsize stations greater than 4 square feet but less than 16 square feet shall have on e total pressure sensor for every 36 square inches of station area. Stations larger than 16 square feet shall have total pressure sensors spaced a maximum of 12 inches apart.
3. The airflow measuring station(s) shall be fabricated of a minimum of 14-gauge galvanized steel, welded casing in 8" depth with 90º connecting flanges in a configuration and size equal to that of the duct it is mounted into. Each station shall be complete with an open parallel cell air straightener – equalizer honeycomb mechanically fastened to the casing, and external signal connection fittings. An identification label shall be placed on each station casing listing model number, size, are and specified airflow capacity.
4. The maximum allowable pressure loss through the station shall not exceed .085" w.c. at 1000 fpm, or 0.15" w.c. at 2000 fpm. Each station shall be capable of measuring the airflow rate within an accuracy of 2% as determined by U.S.G.S.A. certification tests. The station(s) shall have a self-generated sound rating of less than NC 40, and the sound level within the duct shall not be amplified.
5. The airflow measuring station(s) shall be the FAN-Evaluator as manufactured by Air Monitor Corporation or equal.

J. CO2 Sensors

1. Sensor shall be Siemens QPA63.1.

PART 3 - EXECUTION

3.1 START-UP AND COMMISSIONING

A. When installation of the system is complete, calibrate equipment and verify transmission media operation before the system is placed on-line. The manufacturer shall complete all testing, calibrating, adjusting and final field tests. Verify that all systems are operable from local controls in the specified failure mode upon panel failure or loss of power.
B. Provide any recommendation for system modification in writing to owner. Do not make any system modification, including operating parameters and control settings, without prior approval of owner.
C. Coordinate with third party commissioning agent provided by General contractor for testing of the mechanical systems

3.2 ELECTRICAL WIRING AND MATERIALS

A. Install, connect and wire the items included under this Section. This work includes providing required conduit, wire, fittings, and related wiring accessories.
B. Provide wiring & conduit between thermostats and split units.
C. Provide conduit and control wiring for devices specified in this Section, not shown on the electrical plans.
D. Provide conduit and signal wiring between motor starters in motor control centers and high and/or low temperature relay contacts and remote relays in BAS panels located in the vicinity of motor control centers.
E. All wiring to be compliant to local building codes and the NEC.
F. Provide electrical wall box and conduit sleeve for all wall-mounted devices.

3.3 COMMISSIONING, TESTING AND ACCEPTANCE

A. .Perform a commissioning procedure consisting of field I/O testing and commissioning, system commissioning and integrated system program commissioning. Document all commissioning information on commissioning data sheets, which shall be submitted prior to acceptance testing. Commissioning work, which requires shutdown of system or deviation from normal function, shall be performed when the operation of the system is not required. The commissioning must be coordinated with the owner and construction manager to ensure systems are available when needed. Notify the operating personal in writing of the testing schedule so that authorized personnel from the owner and construction manager are present throughout the commissioning procedure.

1. Prior to system program commissioning, verify that each control panel has been installed according to plans, specifications, and approved shop drawings. Test, calibrate and bring on line each control sensor and device. Commissioning to include, but not be limited to:

   a. Sensor accuracy at 10, 50, and 90% of range.
   b. Sensor range.
   c. Verify analog limit and binary alarm reporting.
   d. Point value reporting.
   e. Binary alarm and switch settings.
   f. Actuator ranges.
   g. Fail safe operation on loss of control signal, electric power, and network communications.

B. After control devices have been commissioned (i.e. tested and signed off), each BAS program shall be put on line and commissioned. The contractor shall, in the presence of the owner and construction manager, demonstrate each programmed sequence of operation and compare the results in writing. In addition, each control loop shall be tested to verify proper response and stable control, within specified accuracy's. System program test results shall be recorded on commissioning data sheets and submitted for record. Any discrepancies between the specification and the actual performance will be immediately rectified and retested.

C. After all BAS programs have been commissioned; the contractor shall verify the overall system performance as specified. Tests shall include, but not be limited to:

1. Data communication, both normal and failure modes.
2. Fully loaded system response time.
3. Impact of component failures on system performance and system operation.
4. Time/Date changes.
5. End of month/ end of year operation.
6. Season changeover.
7. Global application programs and point sharing.
8. System backup and reloading.
9. System status displays.
10. Diagnostic functions.
11. Power failure routines.
12. Battery backup.
13. Testing of all electrical and HVAC systems with other division of work.

D. Submit for approval, a detailed acceptance test procedure designed to demonstrate compliance with contractual requirements. This Acceptance test procedure will take place after the commissioning procedure but before final acceptance, to verify that sensors and control devices maintain specified accuracy's and the system performance does not degrade over time.

3.4 TRAINING

A. The BAS Contractor shall be responsible for coordinating and implementing a formal classroom instruction period. The instruction shall be held at the Owner's site, using either the Owner's equipment or equipment identical in type, application and configuration to the Owner's.

B. The instruction is to consist of a total of Five (5) working days, (8 hours/day) and be performed during normal business hours (7:30am - 4:30pm). Instructions or familiarization sessions given to the Owner informally, during the course of the construction project, will not count against the formal training period. 8 hours of refresher training shall be provided on site 6 months after the beginning of the warranty period

C. The BAS Contractor shall submit to the Architect, for approval, a proposed training schedule and format. This shall be submitted a minimum of 60 days prior to the schedule construction completion data. The training shall start no later than 30 days prior to the scheduled construction completion date.

D. The formal training shall, as a minimum, cover the following:

1. System Architecture.
2. System Configuration.
3. Logging On/Logging Off.
4. Password Security Procedures.
5. Adjusting/Changing Set points.
6. Polling Graphics.
7. Making/Changing Graphics.
8. Using the Sequence of Operation.
9. Running 3rd Party Software.
10. Modifying Hardware.
11. Modifying Firmware.
12. Modifying Software.

END OF SECTION

SECTION 23 23 00 - REFRIGERANT PIPING SYSTEMS

PART 1 - GENERAL

1.1 APPLICABLE REQUIREMENTS

A. All work to be furnished and installed under this section shall comply with all the requirements of General Conditions, Supplemental Conditions, Division 01 - General Requirements, Section 230500 - Basic Materials and Methods, and other Sections in Division 23 specified herein.

1.2 SCOPE

A. Includes, but not limited to:

1. Furnish and install piping and piping specialties for refrigeration systems serving split system air conditioning units.

1.3 RELATED WORK SPECIFIED ELSEWHERE

A. Section 230500: Basic Materials and Methods
B. Section 230700: Mechanical Insulation
C. Section 238126: Split Gas Furnace/Air Conditioning Units
D. Section 238145: Split Heat Pump Units
E. Division 26: Electrical

1.4 QUALITY ASSURANCE

A. Qualifications: A refrigeration contractor licensed by the State shall install refrigerant piping.
B. All works and materials related to refrigeration must comply with 2007 CMC Chapter 11 and 2007 CFC Section 606.

PART 2 - PRODUCTS

2.1 REFRIGERANT PIPING

A. Meet requirements of ASTM B 280-88, "Specification for Seamless Copper Tube for Air Conditioning & Refrigeration Field Service", hard drawn straight lengths.
B. Do not use pre-charged refrigerant lines more than 50 feet in length..

2.2 REFRIGERANT FITTINGS

A. Wrought copper with long radius elbows.
B. Approved Manufacturers:

1. Mueller Streamline
2. Nibco, Inc.
3. Grinnell
4. Elkhart Products Corp.

2.3 SUCTION LINE TRAPS

A. Manufactured standard one-piece traps.

2.4 CONNECTION MATERIAL

A. Brazing Rods:

1. Copper to Copper Connections:

a. AWS Classification BCuP-4 Copper Phosphorus (6% silver).
b. AWS Classification BCuP-5 Copper Phosphorus (15% silver).

2. Copper to Brass or Copper to Steel Connections

a. AWS Classification BAg-5 Silver (45% silver)

3. Do not use rods containing Cadmium.

2.5 FLUX

A. Approved Manufacturers

1. "Stay-Silv white brazing flux" by J.W. Harris Co.
2. High quality silver solder flux by Handy & Harmon.

2.6 EXPANSION VALVES

A. For pressure type distributors, externally equalized with stainless steel diaphragm, and same refrigerant in thermostatic elements as in system.
B. Size valves to provide full rated capacity of cooling coil served. Coordinate selection with evaporator coil and condensing unit.
C. Approved Manufacturers:

1. Alco
2. Henry
3. Mueller
4. Parker
5. Singer
6. Sporlan

2.7 FILTER-DRIER

A. On lines 3/4 inch outside diameter and larger, filter-drier shall be replaceable core type with non-ferrous casing and Schraeder type valve.
B. On lines smaller than 3/4 inch outside diameter, filter-drier shall be sealed type using flared copper fittings.
C. Size shall be full line size.
D. Approved Manufacturers:

1. Alco
2. Mueller
3. Parker
4. Sporlan
5. Virginia

2.8 SIGHT GLASS

A. Combination moisture and liquid indicator with protection cap.
B. Sign glass shall be full line size.
C. Sight glass connections shall be solid copper or brass, no copper-coated steel sight glasses allowed.
D. Approved Manufacturers:

1. Alco
2. Asco
3. Mueller
4. Parker
5. Sporlan

2.9 MANUAL REFRIGERANT SHUT-OFF VALVE

A. Ball valves designed for refrigeration service and full line size.
B. Valve shall have cap seals.
C. Valves with hand wheels are not acceptable.
D. Provide service valve on each liquid and suction line at compressor.
E. If service valves come as integral part of condensing unit, additional service valves shall not be required.
F. Approved Manufacturers:

1. CoBraCo (Apollo)
2. Henry
3. Mueller
4. Superior
5. Virginia

2.10 FLEXIBLE CONNECTORS

A. Provide each liquid line and suction line at both condensing unit and evaporator on systems larger than five tons.
B. Anchor pipe near each flexible connector.
C. Connectors shall be for refrigerant service with bronze seamless corrugated hose and bronze braiding.
D. Approved Manufacturers:

1. Anaconda "Vibration Eliminators" by Anamet
2. Vibration Absorber Model VAF by Packless Industries
3. Vibration Absorbers by Superior Valve Co.
4. Style "BF" Spring-flex refrigerant connectors by Vibration Mountings.

PART 3 - EXECUTION

3.1 INSTALLATION

A. Slope suction lines down toward compressor or one inch/10 feet. Locate traps at vertical rises against flow in suction lines.
B. Refrigeration system connections shall be copper-to-copper, copper-to-brass, or copper-to-steel type properly cleaned and brazed with specified rods. Use flux only where necessary.

1. No soft solder (tin, lead, antimony) connections will be allowed in system.
2. Braze valve, sight glass, and flexible connections.
3. Circulate dry nitrogen through tubes being brazed to eliminate formation of copper oxide during brazing operation.

C. Insulate all suction and hot gas lines. Insulate liquid lines where pipe may be in close contact to humans.

3.2 FIELD QUALITY CONTROL

A. Make evacuation and leak tests in presence of Architect's Engineer after completing refrigeration piping system. Positive pressure test will not suffice for procedure outlined below:

1. Draw vacuum on each entire system with vacuum pump to 200 microns using vacuum gauge calibrated in microns. Do not use cooling compressor to evacuate system nor operate it while system is under high vacuum. Isolate compressor from system piping using shut-off valves prior to pulling vacuum.
2. Break vacuum with refrigerant to be used and re-establish vacuum test. Vacuum shall hold for 24 hours at 200 microns without compressor running.
3. Conduct test at 70°F ambient temperature minimum.
4. Do not use systems until tests have been made and systems started up as specified. Inform Owner's Representative of status of systems at time of final inspection and schedule start-up and testing if prevented by outdoor conditions before this time.
5. After testing, fully charge system with refrigerant and conduct test with Halide Leak Detector.
6. Install valves and specialties in accessible locations. Install refrigeration distributors and suction outlets at same end of coil

END OF SECTION

SECTION 23 31 13 - AIR DISTRIBUTION

PART 1 - GENERAL

1.1 APPLICABLE REQUIREMENTS

A. All work to be furnished and installed under this Section shall comply with all the requirements of General Conditions, Supplemental Conditions, Division 01 - General Requirements, Section 230500 - Basic Materials and Methods, and other Sections in Division 23 specified herein.

1.2 SCOPE

A. All work to be furnished and installed under this Section shall comply with all the requirements of Division 01, and shall include, but not necessarily be limited to, the following:

1. Ductwork – Rigid and Flexible
2. Ductwork Specialties
3. Flexible Connections
4. Sealants, Adhesives and Tapes
5. Flashings
6. Bird Screens
7. Duct Access Panels and Doors
8. Control Dampers
9. Backdraft Dampers
10. Louvers
11. Diffusers, Grilles, and Registers
12. Fire and Smoke Dampers
13. Variable Air Volume (VAV) Terminal Units

1.3 RELATED WORK SPECIFIED ELSEWHERE

A. Section 230500: Basic Materials and Methods
B. Section 230593: Testing, Adjusting and Balancing
C. Section 230700: Mechanical Insulation
D. Section 230900: Controls and Instrumentation
E. Division 26: Electrical

1.4 QUALITY ASSURANCE

A. Codes and Standards: Provide products conforming to the requirements of the following:

1. ARI 885-98 “Procedure for Estimating Occupied Space Sound Levels in the Application of Air Terminal and Air Outlets.”
2. AMCA-210 - Laboratory Methods of Testing Fans for Rating Purposes.
3. ANSI S1.23 - Designation of Sound Power Emitted by Machinery and Equipment.
4. ASC-A7001 - Standard for Duct Sealants.
5. ASTM A167 - Standard Specification for Stainless and Heat-Resisting Chromium-Nickel Steel Plate, Sheet, and Strip. Type 304 or 304 stainless steel.
6. ASTM A525 - Standard Specification for General Requirements for Steel Sheet, Zinc-Coated (Galvanized) Hot-Dip Process. G90 zinc-coated.
7. ASTM A527/A527M - Standard Specification for Sheet, Zinc-Coated (Galvanized) by the Hot-Dip Process, Lock-Forming Quality.
8. TIMA AAC-101 - Standard for fiberglass duct liner with erosion proof facing.
9. UL 181 - Factory-Made Air Ducts and Connections, Class 1.

B. Conform to NFPA 90A "Standards for the Installation of Air Conditioning and Ventilating Systems".

C. Provide and construct ductwork systems in conformance with the latest editions of the following documents:

1. SMACNA "HVAC Duct Construction Standards-Metal and Flexible - 1995" (HDCS)
2. SMACNA "Accepted Industry Practice for Industrial Duct Construction" for duct pressures above +5" W.G. positive pressure or below -5" W.G. negative pressure. Where differences exist between SMACNA and the prevailing building code, the gauge or construction method of the submitted ductwork shall be the more stringent of the two standards
3. ASHRAE Systems and Equipment Handbook "Duct Construction" chapter
4. ASHRAE Fundamentals Handbook "Duct Design" chapter

D. Alternatives: The SMACNA standards and publications referenced in this Section of the specifications establish ductwork construction requirements.

1. Alternatives to these standards and publications may be submitted. Approval will be based on demonstration that such alternatives are equivalent and satisfy the functional requirements described in the referenced standards.
2. Such demonstration shall include evidence that the alternatives proposed were tested in accordance with SMACNA procedures and with test results certified by an independent testing laboratory.

E. All ductwork and equipment shall be seismically supported and braced per the SMACNA “Seismic Restraint Manual: Guidelines for Mechanical Systems”.

F. Flame/Smoke Rating: All materials, including sealants and adhesives, exposed within plenum shall have a flame-spread index of 25 or less, and smoke developed index of 50 or less, as tested by ASTM E84 (NFPA 255) method.

1.5 SUBMITTALS

A. Prior to construction, submit for approval on all materials and equipment:

1. Ductwork – Rigid and Flexible
2. Flexible Connections
3. Sealants, Adhesives and Tapes and calculated leakage estimate based on Class 3 (3 cfm/sq.ft). leakage.
4. Flashings
5. Bird Screens
6. Duct Access Panels and Doors
7. Backdraft Dampers
8. Control Dampers
9. Diffusers, Grilles, and Registers
10. Fire and Smoke Dampers

    a. Submit a schedule of selected dampers listing the following information for each damper: Location, nominal size, free area velocity, and pressure drop at free area velocity.

11. Sound Traps
12. VAV Boxes
13. SMACNA "HVAC Duct Construction Standards - Metal and Flexible"

B. Shop Drawings: Provide shop drawings of sheet metal ductwork and plenums as follows:

1. Draw to a scale not less than ⅛" to one foot, with sheet sizes equal to Contract Drawings.
2. Show duct sizes, where possible use even duct sizes.

3. Show fitting details.
4. Show coordination with lighting fixtures, fire dampers, smoke dampers, piping, diffusers, grilles, registers, fans, major electrical runs, cable trays and bus ducts.

C. Shop Drawings: Provide shop drawings for field erected mechanical equipment:

1. Draw to a scale of ½" to one foot, with sheet sizes equal to Contract Drawings.
2. Show plan, sections, elevations and details of all joints and enclosures.
3. Detail access doors and hardware.
4. Detail coil, damper, humidifier, filter and fan installations.
5. Show access space for electrical components that are part of the equipment provided and/or installed such as power and control panels on humidifiers. This shall be coordinated with Division 26 and NEC.

D. Certifications: Provide a duct schedule, certified by an officer of the sheet metal fabrication subcontractor, that the ductwork conforms to SMACNA standards, and for each sheet metal system furnished on the project include:

1. System name.
2. Duct material.
3. Duct gauge.
4. SMACNA rectangular reinforcement number.
5. SMACNA intermediate reinforcement number.
6. SMACNA transverse reinforcement number.
7. Rod diameter and type.
8. Sealant type.
9. Attachment method.
10. Duct system design pressure.

E. Construction IAQ Management Plan: Collaborate with the general contractor to submit and implement an IAQ Management Plan for the construction process meeting the requirements of the SMACNA IAQ Guidelines. This plan should address the protection of the ventilation system components during construction and cleanup of contaminated components after construction is complete. SMACNA IAQ Guideline recommends control measures in five areas. The IAQ Management Plan should address how compliance has been achieved in these required five areas as follows:

1. HVAC Protection

   a. Shutdown of return side of existing HVAC system in areas effected by heavy construction.
   b. Provision of temporary filters if existing or new systems must remain operational during construction.
   c. Dampering of supply and returns and sealing of openings in areas subject to construction dust.

2. Source Control

   a. How will reduction of contaminants be reduced at the source?
   b. What steps will be taken to employ low emitting products and sealants.
   c. How will air handling equipment be cycled off when not needed.

3. Pathway Interruption

   a. Describe how the construction space will be ventilated as required to dilute contaminants.
   b. Describe how occupied spaces adjacent to construction areas will be kept at positive pressure relative to spaces under construction.

4. Housekeeping: Describe how the following housekeeping objectives will be implemented:
   a. Reduction of dust generated by work will be suppressed.
   b. Maintaining a frequent cleaning frequency for dust and particulates.
   c. Remove spills or excess applications of solvent-containing products as soon as possible.
   d. Remove accumulated water and keep work areas as dry as possible.
   e. Protect insulation materials from exposure to moisture.
5. Scheduling: Describe how overlap of construction activity and ongoing building occupancy activities will be minimized.

F. Field Manual: Submit one copy of the SMACNA "HVAC Duct Construction Standards - Metal and Flexible". Maintain a second copy on the project site.
G. Any ductwork installed without prior approval by the specifier, shall be replaced at the expense of the contractor.
H. The contractor must comply with the enclosed specification in its entirety. If on inspections, the specifier finds changes have been made without prior approval, the contractor will make the applicable changes to comply with this specification, at the contractor's expense.
I. At the discretion of the specifier, sheet metal gauges, and reinforcing may be checked at various times to verify all duct construction is in compliance.

1.6 DELIVERY, STORAGE, AND HANDLING

A. Deliver products to the site in containers with manufacturer's stamp or label affixed.
B. Store and protect products against dirt, water, chemical, and mechanical damage. Do not install damaged components. Remove damaged products from project site.

PART 2 - PRODUCTS

2.1 DUCTWORK

A. Construct all ducts and plenum of gauges, and with joints, bracing, reinforcing, and other construction details in accordance with the latest construction standards previously listed. Metals shall be manufactured by United States Steel, Kaiser, Rolok or equal.
B. Duct dimensions indicated on drawings are net, inside, clear dimensions. For internally lined ducts, add lining thickness to determine metal duct dimensions.
C. Ducts shall be constructed of material gauges and reinforcement per SMACNA pressurization classifications to meet 150% of the pressure requirements for external static pressure scheduled on drawings for the fans serving each system. Where differences exist between SMACNA and the prevailing building code, the gauge or construction method of the submitted ductwork shall be the more stringent of the two standards. See also Part III Execution for matrix of materials and pressure requirements.

2.2 SHEET METAL MATERIALS

A. General Material Requirements: Comply with SMACNA's "HVAC Duct Construction Standards - Metal and Flexible" for acceptable materials, material thicknesses, and duct construction methods unless otherwise indicated. Sheet metal materials shall be free of pitting, seam marks, roller marks, stains, discolorations, and other imperfections.

B. Galvanized Sheet Steel: Comply with ASTM A 653/A 653M.
   a Galvanized Coating Designation: [G60 (Z180)] [G90 (Z275)].
   b Finishes for Surfaces Exposed to View: Mill phosphatized.

C. PVC-Coated, Galvanized Sheet Steel: Comply with ASTM A 653/A 653M.

1. Galvanized Coating Designation: [G60 (Z180)] [G90 (Z275)].
2. Minimum Thickness for Factory-Applied PVC Coating: 4 mils (0.10 mm) thick.
3. Coating Materials: Acceptable to authorities having jurisdiction for use on ducts listed and labeled by an NRTL for compliance with UL 181, Class 1.

D. Carbon-Steel Sheets: Comply with ASTM A 1008/A 1008M, with oiled, matte finish for exposed ducts.

E. Stainless-Steel Sheets: Comply with ASTM A 480/A 480M, Type 304 or 316, as indicated in the "Duct Schedule" Article; cold rolled, annealed, sheet. Exposed surface finish shall be No. 2B, No. 2D, No. 3, or No. 4 as indicated in the "Duct Schedule" Article.

F. Aluminum Sheets: Comply with ASTM B 209 (ASTM B 209M) Alloy 3003, H14 temper; with mill finish for concealed ducts, and standard, one-side bright finish for duct surfaces exposed to view.

G. Factory- or Shop-Applied Antimicrobial Coating:

1. Apply to the surface of sheet metal that will form the interior surface of the duct. An untreated clear coating shall be applied to the exterior surface.
2. Antimicrobial compound shall be tested for efficacy by an NRTL and registered by the EPA for use in HVAC systems.
3. Coating containing the antimicrobial compound shall have a hardness of 2H, minimum, when tested according to ASTM D 3363.
4. Surface-Burning Characteristics: Maximum flame-spread index of 25 and maximum smoke-developed index of 50 when tested according to UL 723; certified by an NRTL.
5. Shop-Applied Coating Color: White.
6. Antimicrobial coating on sheet metal is not required for duct containing liner treated with antimicrobial coating.

H. Reinforcement Shapes and Plates: ASTM A 36/A 36M, steel plates, shapes, and bars; black and galvanized.

1. Where black- and galvanized-steel shapes and plates are used to reinforce aluminum ducts, isolate the different metals with butyl rubber, neoprene, or EPDM gasket materials.

I. Tie Rods: Galvanized steel, 1/4-inch (6-mm) minimum diameter for lengths 36 inches (900 mm) or less; 3/8-inch (10-mm) minimum diameter for lengths longer than 36 inches (900 mm).

2.3 DUCTWORK FABRICATION

A. Joints – Sealing

1. Duct tape is not allowed. Rolled elastomeric duct sealants are not allowed.
2. Solvent-based and oil-based sealants are not allowed indoors.
3. Seal all transverse joints - this includes mechanical joints similar to Ductmate on all supply, return, exhaust and outside air intake ducts.
4. All sealant systems for outdoor application to be suitable for use in exposure to water. Vulcum 801 and 351.
5. All sealant systems for indoor application to be meet VOC limits as specified in South Coast Air Quality Management District Rule #1168 limiting VOC's to 100 g/l. Sealants by Hardcast, Ductmate, Mon-Eco Industries, United McGill or equal, as recommended for ductwork application.
6. Water-Based Joint and Seam Sealant: Flexible, adhesive sealant, suitable for high velocity and high pressure applications, UL 181B-M listed, UL 723 classified, and

complying with NFPA requirements for Class 1 ducts.

a. Outdoor Application: Not permitted where subject to moisture exposure.
b. Indoor Application: Hardcast Iron Grip, Ductmate PROseal, Mon-Eco EZ Seal 44-44, or equal.

7. Two-Part Tape Sealing System: Woven-fiber tape impregnated with gypsum mineral compound and modified acrylic/silicone activator to react exothermally with tape to form hard, durable airtight seal. Hardcast Two Part II, McGill Uni-Cast, or equal.

B. Joints - Rectangular Ducts

1. Slip drive joints, standard seams, flanges or welding as required by SMACNA HVAC Duct Construction Standards for system static pressure. Ductmate, MEX Industries, or equal are acceptable joint methods, but must be sealed as described previously. Transverse joints shall be constructed per Figure 1-4 for types T-8 through T-25. T-1 and T-5 slip joints are NOT allowed. Joint T-2, T-3, T-6 and T-7 reinforced slip joints are allowed below 2” static pressures.

C. Joints - Round

1. Exposed Ductwork: Slip drive and sheet metal screws.
2. Concealed Ductwork: Sheet metal screws.

D. Elbows

1. Construct long radius elbows with centerline not less than 1.5 times the duct width. Shorter radius elbows may be used where required to fit in restricted spaces, or as shown. Provide single thickness turning vanes on all short rectangular radius elbows less than 25" wide. Provide double thickness turning vanes for short rectangular radius elbows 25" wide and greater. Number of vanes per SMACNA. Elbows with square throat and radius heel are NOT allowed.

E. Transitions

1. Construct transitions with minimum slope of 1 to 5 ratio and in conformance to SMACNA.

F. Branch Connections

1. Provide 45° entry boots or radius taps for rectangular duct take-offs and conical or bellmouth taps for round duct take-offs. Straight 90° taps are not allowed, except where round take-off duct size equals round branch duct size. Provide volume dampers at take-offs for balancing if not specifically noted as provided at outlet or inlet. Provide insulation guards at transitions to lined ductwork.

2.4 RECTANGULAR DUCTWORK

A. Construct rectangular ductwork to meet all functional criteria defined in Section VII, of the SMACNA “HVAC Duct Construction Standards Metal and Flexible” 1995 Edition. This shall be subsequently referred to as the SMACNA Manual. All ductwork must comply with all local, code requirements. Ductwork shall be constructed of galvanized steel. Diagonally cross break all panels on ducts 30 inches wide and larger, or bead using automatic bead machine with beads at 12 inches on center or less. All connections shall utilize 45° boot take-offs. Bullhead tees and straight taps are not permitted. All ductwork shall be stainless steel in, and around, magnetically/electrically sensitive rooms.

2.5 ROUND DUCTWORK

A. Round and oval ductwork shall be constructed to SMACNA round ductwork requirements of galvanized sheet steel. Spiral lock seams, only, to 50" diameter. Larger than 50" may be welded longitudinal or spiral lock seam. Lap or snap lock seams are not permitted for round ductwork of any size. Provide beaded sleeve joints or flanges with gasket joints. Elbows shall be 5-gore mitered and welded. All elbows shall be long radius type with centerline radius to duct diameter of 1.5, exceptions will only be allowed at restricted space locations. All connections shall utilize welded conical tees, aluminum conical fitting with damper by Flexmaster #CBD, or 45° boot take-offs by Flexmaster #STOD. Spin-in type or other types of butt tees, bullhead tees or straight taps are not permitted. Flat oval shall be utilized in space-restricted areas. All ductwork shall be aluminum in and around magnetically/electrically sensitive rooms.

2.6 FLEXIBLE DUCTWORK

A. Flexible one-inch thick insulated round ductwork may be utilized where shown on the Drawings and at the last seven (7') feet to each air outlet and inlet, unless shown otherwise on the plans. Maximum of only one 90° bend in any length. No intermediate joints are allowed. Connect each end with stainless steel screw operated drawbands. Support duct to maintain smooth shape without sagging. All connections shall utilize welded conical tees, aluminum conical fitting with damper by Flexmaster #CBD, or 45° boot take-offs by Flexmaster #STOD. Spin-in type or other types of butt tees, bullhead tees or straight taps are not permitted.

B. Flexible ductwork for low pressure systems with positive static pressure at or below 2" w.g. positive pressure shall be a trilaminate of aluminized foil, fiberglass insulation, and aluminized polyester, mechanically locked to galvanized steel helix without adhesives, exterior 1" fiberglass insulation and fire retardant plastic outer jacket. Flexmaster #Type 5B, Thermoflex Model MKE or approved equal.

C. Flexible ductwork for medium and high pressure systems with static pressures above 2" w.g. through 10" w.g. positive pressure shall be a heavy coated fiberglass cloth fabric mechanically locked to galvanized steel helix without adhesives, exterior 1" fiberglass insulation and fire retardant plastic outer jacket. Flexmaster #Type 4B, Thermoflex Model MKC or approved equal.

D. Flexible aluminum ductwork for use in magnetic/electrically sensitive room environments, such as MRI rooms, in low pressure systems with static pressure at or below 2" w.g. positive pressure shall be a trilaminate of aluminized foil with aluminum helix with exterior 1" aluminum jacket fiberglass insulation. Flexmaster #TL-B or approved equal.

2.7 ACOUSTICAL DUCT LINER

A. Acoustic Duct Lining shall be installed where shown on the drawings and as specified for low velocity supply, return and exhaust ductwork. Liner is to be utilized to line vertical supply duct risers, mechanical shafts conveying return air, terminal box discharge plenums, and other horizontal duct runs where shown on drawings. Dimensions of lined ducts given on the drawings indicate the inside dimensions of duct after the lining has been installed. Black-coated (vinyl, acrylic or neoprene) duct lining shall be adhered by 100% covering of a fire retardant adhesive (3M EC-1128, Benjamin-Foster 85-20, or equal). When width of duct exceeds 12" and also on sides when height exceeds 24", use non-ferrous mechanical fasteners such as welded pins and speed clips, 12" on center maximum lateral spacing and 18" on center maximum longitudinal spacing. Start fastening within 3" of upstream transverse edge of the liner and within 3" of the longitudinal joint. Mechanical fasteners shall not pierce the duct walls. The pins shall be cut off flush, washers shall be used and installation made so that no gaps or loose edges occur in the insulation. Apply a brushcoat of Benjamin-Foster 30-36 to washers, extending onto lining surface a minimum of 2". Top pieces shall be supported by the side pieces. Provide insulated build out frames for attaching dampers at running vanes where required.

B. All transverse and longitudinal abutting edges of duct lining shall be sealed and lapped 3" with a heavy coat of Foster 30-36, in accordance with the manufacturer's recommendations. All exposed edges shall be installed with sheet metal nosings. At all openings in the ductwork there shall be a galvanized metal flange, equal in depth to adjacent lining and having a 1½" lip to hold lining in place. All bolt holes shall be sealed airtight.

C. Internal Duct lining shall be installed in complete accordance with the Sheet Metal and Air-Conditioning Contractors National Association (SMACNA) Duct Lining Application Standard. Mechanical fasteners shall conform to Mechanical Fastener Standard MF-1 from SMACNA. Adhesive shall be water-based and conform to Adhesive and Sealant Council Standards for Adhesives for Duct Liner ASC-A-7001C.

D. Internal Duct Lining shall be 1" unless otherwise called out, matte-faced, 1.5 lb/ft^3 minimum density and shall meet the requirements of NFPA90-A.

E. Acoustical duct liners shall comply with the following requirements and standards:

1. ASTM C 1071, Type 1.
2. NFPA 90A and 90B.
3. Resist fungal growth.
4. Support air velocities up to 5,000 fpm.
5. Per UL 723 test method, flame spread shall not exceed 25, and smoke developed shall not exceed 50.
6. Per test method ASTM C423 using Type A mounting, minimum allowable NRC shall be 0.45.

F. The following are acceptable, subject to the above:

1. Internal Duct Lining:

a. Aeroflex Type 150 from Owens-Corning Fiberglass, Toledo, OH.
b. Linacoustic/Spiracoustic Type 150 from Manville Products Corp., Denver, CO.
c. Ultralite Type 150 from Certain Teed Corp., Valley Forge, PA.
d. Pre-approved equal to above.

2. Mechanical Fasteners:

a. Gemco TYPE IH-A from Goodloe E. Moore, Inc., Danville, IL.
b. Eckoustic-Klip from Eckel Industries, Inc., Cambridge or MA.
c. Pre-approved equal to above.

2.8 DUCT/VAV UNIT SOUND CONTROL LAGGING

A. Where indicated on the drawings, VAV unit or duct shall be wrapped with minimum 2" thick glass or mineral fiber blanket, 1.5 lb/ft^3 minimum density and two layers of "mass-loaded" vinyl sheet. Each lead vinyl sheet shall weight 0.4-0.5 lb/ft^2 and shall be 0.025 - 0.040 inches thick. The lead vinyl shall be applied to the fiber base fabric with edges overlapped by at least 2 inches and sealed with duct tape. Complete system or lead/vinyl material shall provide a minimum STC-20 as measured in an independent accredited acoustical laboratory in accordance with ASTM E90 and/or E413.

B. The following are acceptable:

1. Gray Loaded Vinyl from Singer Partitions, Inc., Chicago, IL.
2. Soundfab from The Soundcoat Company, Inc., Santa Ana, CA.
3. EAR WB-5 from EAR Corporation, Indianapolis, IN or approved equal.

2.9 PLENUMS AND EQUIPMENT CASINGS

A. Construct casings and plenums in conformance with SMACNA.

B. Minimum Pressure Class: Unless otherwise indicated construct plenums and casings to withstand either a negative or positive static pressure of 4" W.G.

C. Single-Wall: Provide single-wall, casings and plenums where indicated on the drawings.

1. Construct in accordance with SMACNA Standards.
2. Use steel-angle-reinforced standing-seam construction.
3. Locate intermediate bracing angles bolted to the casing 24 inches on centers.
4. Construct for static pressure indicated or for the maximum fan static pressure whichever is less.
5. Bolt to 3" high concrete pads using 1½" x 1½" x ¼" thick galvanized steel structural sections.

D. Double-Wall: Provide where indicated on the drawings, constructed as follows:

1. Provide 4" thick prefabricated double wall insulated metal panel assemblies, with 16MS gauge aluminum or 18 gauge minimum galvanized steel outer sheets.
2. Provide 22 gauge Type 304 stainless steel inner sheets.
3. Casings shall be fully metal enclosed, insulated with 4" thick rigid fiberglass insulation and conforming to NFPA 90A, with maximum flame spread of 25 and maximum smoke developed of 50.
4. Field or factory fabricate to size and configuration indicated on the drawings, using field verified dimensions.
5. Provide coordinated shop drawings.
6. Reinforce spans 10' or greater with structural steel sections to yield maximum deflection ¼" at minus 10" or plus 10" W.G. static pressure.
7. Provide openings and doors, all factory framed, and reinforced with 304 stainless steel structural sections.
8. Construct doors of same material as casings, of sizes and locations indicated on the drawings but not smaller than 18" by 54", and conforming to SMACNA.
9. Provide doors, hinges and hardware factory fabricated and mounted.
10. Door swings shall open against air pressure, with door latches operable from either side.
11. Provide door seals with neoprene gaskets, which have an airtight seal.
12. Provide each door with a 10" by 10" wire reinforced double pane window.
13. Bolt base channel to 3" high concrete pads.

2.10 DUCTWORK SPECIALTIES

A. General: Where specifically called for, materials for use in fabricating ductwork specialties shall be identical to that used to fabricate ductwork. See drawings and Part 3, Execution for schedule.

B. Volume and Splitter Dampers: Galvanized sheet metal blade and frame with Ventfabrics Inc., Ventlok operating hardware. For accessible dampers, provide #641 self -locking dial regulators and #644 self-locking dial regulators for insulated ductwork, #637 square end bearing, and #635 spring end bearing, as applicable. For inaccessible dampers, provide #666 or #677 concealed locking damper regulator with bearings as above. For static pressures above 3" W.G., provide #640 HiVel dial regulator and #609 HiVel end bearing for accessible dampers. Regulators shall extend to and through ceiling with neatly installed hardware at the finished ceiling. For inaccessible dampers requiring adjustment through diffusers use Young Regulator, Bowden cable control system.

C. Multi-louver Volume Dampers: 16 gauge galvanized steel frame. Opposed, 6" wide, 16 gauge galvanized steel blades. Concealed linkage in frame. Ruskin #CD35/OBD or equal.

D. Flexible Connections: Provide flexible connectors at the discharge and inlet of fans, air handlers, rotating mechanical equipment, and where shown on the Drawings for proper vibration isolation. Neoprene impregnated glass cloth with 24 gauge galvanized metal frame. Neoprene-only connectors are <u>not</u> allowed. Minimum dimensions - 3" metal, 3" fabric, 3" metal. Ventfabrics #Ventglas or approved equal by Duro Dyne, Q Industries, consolidated Kinetics, Ductmate Proflex or Elgen.

E. Ducts through roof shall be 16 gauge (or minimum of 2 gauges heavier than attaching ductwork), flashed and counterflashed, and provided with storm collars to secure a watertight construction.

F. Bird Screens: 14 gauge, ½", galvanized wire mesh, set in a galvanized steel frame, screw set.

2.11 DUCT ACCESS PANELS AND DOORS

A. In sheet metal work, hollow core double construction of same or heavier gauge material as duct in which installed. Use no door smaller than 12" by 12" for simple manual access or smaller than 24" by 24" where personnel must pass through infrequently. Use 24" by 60" minimum for filters and more frequent maintenance. Use Ventlok or approved hinges and latches on all doors; 100 Series hinges and latches on low pressure system doors up to 18 " maximum dimension, 200 Series on larger low pressure system doors and 333 Series on high pressure systems. Construct doors up to 18 " maximum dimension with one inch overlap fit and gasket with ¾" by ⅛" sponge rubber, fit larger doors against 1½" by ⅛" flat stock or angle frame and gasket with ¾" by ⅛" sponge rubber or felt. Door swing to be opposite airflow. CESCO, Vent Products, Air Balance, Ductmate Sandwich or equal. Access doors smaller than 12" x 12" can be used for visual inspection of dampers, etc. on small ductwork less than 12" wide but must be of maximum size that will fit on duct with 6" x 6" as minimum size. All access doors smaller than 12" x 12" must be approved by Engineer for the specific application prior to ordering.

2.12 CONTROL DAMPERS

A. General: Low leakage dampers are to have a maximum leakage rate of 3 cfm/ft^2 at 1.0 in w.g. pressure difference when tested to AMCA Standard 500.

B. Damper Type One: Airfoil Low Leakage Dampers

1. Application: Commercial supply, return, and general exhaust air systems up to 3,000 fpm velocity.
2. Frames to be 5" x 1"x 16 gauge steel channel
3. Blades to be 6" wide, 14 gauge galvanized steel design.
4. Axles to be ½" diameter plated steel.
5. Bearings to be stainless steel sleeve type pressed into frame.
6. Linkage to be concealed in frame
7. Crank lever for operator to be provided.
8. Provide with mill finish on blades and frame.
9. Silicone rubber blade seals.
10. Flexible metal jamb seals.
11. Maximum temperature rating to be 300°F.
12. Required Options:
    a. Damper position indicator switch
13. Manufacturer: Ruskin #CD60, Swartout, NCA PBD/OPD-AF-101, American Warming, Air Balance, Greenheck or approved equal.

C. Damper Type Two: Airfoil low Leakage for coastal environments.

1. Application: Commercial supply, return, and general exhaust air systems where damper will be exposed to damp marine air and where velocity is less than 3,000 fpm.
2. Frame to be 5" x 1" x 0.125 extruded aluminum
3. Blades to be 6" wide, 6063-T-5 aluminum at approximately 6" centers, opposed blade design.
4. Seals to be PVC coated polyester on blade edges, suitable for -25°F to +180°F. Jamb seal to be flexible metal compression type.
5. Bearing to be molded synthetic.
6. Linkage to be exposed on larger units and concealed on units under 14" high.
7. Axles to be ½" plated steel hex.

8. Control shaft to be ½" diameter. Outboard support bearing to be supplied with all single section dampers for field mounted operators. Factory installed jackshaft supplied on multiple section dampers.
9. Unit to meet leakage rate of 5 cfm/sf at 3" W.G. when tested in accordance with AMCA Standard 500.
10. Manufacturer: Ruskin #CD50, Swartout, NCA ACD-56-OB, American Warming, Air Balance, Greenheck or approved equal.

D. Damper Type Three: Heavy Duty

1. Application: Velocity over 3,000 fpm and fan outlet damper.
2. Frames to be 10" x 2" x 12 gauge steel channel.
3. Blades to be 7¾" wide, 0.080 thick extruded aluminum airfoil design.
4. Axles to be ¾" diameter plated steel.
5. Bearings to be stainless steel sleeve type pressed into frame.
6. Linkage to be out of airstream with 10 gauge galvanized steel clevis type arms on 7/8" diameter brass trunnions at 3" radius. Tie bar to be ⅜" diameter plated steel.
7. Crank lever for operator to be provided.
8. Provide with mill finish on blades and frame.
9. Maximum temperature rating to be 300°F.
10. Options:

    a. Silicone rubber blade seals.
    b. Flexible stainless steel jamb seals.
    c. Bearings with integral shaft seals.
    d. Bearings bolted to frame.
    e. Bolt holes in frame.
    f. Special finishes.
    g. Electric or pneumatic operator.

11. Manufacturer: Ruskin #CD102, Swartout, American Warming, Air Balance, Greenheck or approved equal.

E. Damper Type Four: Airfoil Low Leakage Insulated Dampers

1. Application: Natural Ventilation inlets and outlets.
2. Frames to be steel or aluminum channel thermally broken with insulation within frame channels.
3. Blades to be 6" wide, Insulated (½" polystyrene), airfoil shaped, galvanized steel double skin construction of 14 gauge equivalent design.
4. Blade Seals: Extruded silicone rubber with flexible metal compression type jamb mating seal.
5. Axles to be ½" diameter plated steel.(Optional stainless steel)
6. Bearings to be synthetic sleeve type pressed into frame.
7. Linkage to be concealed in frame.
8. Crank lever for operator to be provided.
9. Provide with mill finish on blades and frame.
10. Maximum temperature rating to be 300°F.
11. Required Options:

    a. Damper position indicator switch.

12. Manufacturer: Greenheck Model ICD-45, Ruskin #CD40x2, TAMCO Series 9000 BF, or approved equal performance insulating damper.

2.13 BACKDRAFT DAMPERS

A. Damper Types:

1. Heavy Duty Backdraft Dampers: Provide counterweight type complete with frame, end bearings, counterbalance assembly, blades, and linkage. Pressure drop to be no more than 0.24”w.g. at 1000 fpm. Install at outside air intakes, exhaust outlets, and where shown on Drawings. Pacific Air Products #PRD-100AL, Ruskin #CBD2, NCA, or equal by Swartout, American Warming or Vent Products.
2. Nonmetallic Backdraft Damper: Provide complete with 16ga frame, neoprene coated fiberglass blades, galvanized expanded metal grill. Ruskin NMS2.

B. Application Requirements:

1. Generator Discharge Damper: Heavy Duty Backdraft Damper. Size at no more than 1000 fpm velocity.
2. Outside Air Intakes except where a control damper is required – Heavy Duty Backdraft Damper.

2.14 LOUVERS

A. Louvers are generally to be provided under Division 10. Where louvers are not covered on architectural plans and specifications, contractor is to provide under the following specification:

1. Louvers to be 6" deep, 35° drainable fixed blade design, constructed of galvanized steel or extruded aluminum, or as specified on the plans.
2. Frames to be constructed of 6" deep channel.
3. Provide with ½" x ½" galvanized mesh birdscreen mounted on backside of louver.
4. Finish/color per architect/engineer's review.
5. Manufacturer: American Warming, Industrial Louver, Vent Products, NCA, Swartout, Ruskin ELF6375DX Louvers & Dampers or equal.

2.15 DIFFUSERS, GRILLES AND REGISTERS

A. All diffusers, grilles, and registers shall be selected to provide proper air distribution for the intended occupant application. All supply air devices shall be selected to provide a maximum air velocity of 50 fpm at three feet above the floor, unless otherwise noted. Manufacturer's representative shall carefully review Architectural and Mechanical drawings and ensure diffuser/grille/register selections will provide proper air distribution at NC 25 or less. Manufacturer at no additional expense to the Owner shall replace diffusers, grilles, and registers not providing proper distribution or excessive noise at scheduled airflow.

B. All frames shall be selected to fit the ceiling type. Verify with Architectural Drawing. Each diffuser, grille and register shall be individually capable of balancing via duct mounted balancing dampers or attached opposed blade dampers. Provide unit opposed blade damper where individual duct mounted balancing dampers are not provided.

C. Sizes, capacities and patterns shall be as shown on the Drawings. Manufacturer: Krueger, Titus, Price, Nailor, Anemostat, Carnes or Tuttle&Bailey.

D. Provide the following devices identified with Titus model numbers:

1. CSD-1 (Ceiling Supply Diffuser #1): Titus #MCD modular core ceiling diffuser with AG-40 opposed blade damper. Standard white finish. Mount on bottom of exposed ductwork.
2. CLD-1 (Ceiling Linear Diffuser #1): Titus #ML plenum slot diffuser, 1" slot, adjustable gasketed blade with internal liner, flat black finish, steel construction.
3. FSD-1 (Floor Supply Diffuser #1): Krueger #FPDFR-R diffuser, 9¾" Diameter x 5¾" deep. Curved slot helical diffuser. High impact polymeric construction. Custom color per architectural drawings.
4. WSR-1 (Wall Supply Register #1): Titus #272RL with adjustable front and rear blades, steel construction, with #AG-35 opposed blade damper, factory white finish, 1¼" blade opening.

5. CRR-1 (Ceiling Return/Exhaust Register #1): Titus #PAR perforated face ceiling return, steel construction, flush demountable face, with type 3 border for lay-in tee bar application or type 1 border for surface mount applications. Provide 22" x 22" (or 12" x12" per plan) registers and 22" x 22" (or 12" x 12" per plans) sheet metal plenum with reduced size outlet collar at lay-in tee bar ceilings. Outlet collar to match size indicated on plans. See architectural plans for ceiling types.
6. WRR-1 (Wall Return/Exhaust Register #1): Titus #3FL heavy duty return grille, steel construction, with 3/4 " blade spacing, 45° deflection, factory white finish, with #AG-35 opposed blade damper and blades parallel to long dimension.
7. CTG-1 (Ceiling Transfer Grill #1): Titus #PAR perforated face ceiling return, steel construction, flush demountable face, with type 3 border for lay-in tee bar application or type 1 border for surface mount applications. Provide 22" x 22" (or 12" x12" per plan) registers and 22" x 22" (or 12" x12" per plan) sheet metal plenum with reduced size outlet collar at lay-in tee bar ceilings. Outlet collar to match size indicated on plans. See architectural plans for ceiling types.
8. WTG-1 (Wall Transfer Grille #1): Titus #3RL return grille, steel construction with horizontal face bars, factory white finish, 3/4" blade spacing, 45° deflection.
9. Transfer Openings at Return Air Plenums: Contractor is responsible to provide transfer openings through full height walls between rooms at return air plenums. Openings are to be located above finished ceilings to allow free flow of return air back to inlets of ducted return air systems. Final sizes, locations and number of openings to be verified and coordinated with Architect or Engineer after walls are installed. Openings shall be finished with sheet metal caps.

2.16 DUCT SMOKE DETECTORS (DSD)

A. Duct mounted photoelectric smoke detector. One required for each heating or cooling system supplying air in excess of 2,000 cfm, for systems serving more than one occupancy type, and for control of each combination fire/smoke damper when not controlled by Div. 26 area wide detection system. Coordinate with Div 16. work and electrical installer for power to smoke detector. Detector shall be mounted in the supply air ductwork downstream of the air handler and filters, or upstream of combination dampers. Coordinate with control installer to assure that detector shall shut down the air-moving equipment when smoke is detected and close associated damper actuator(s). Sensor shall be selected to operate with air velocity rating from 100 to 4000 fpm. Provide with metal sampling tube. Provide remote test and reset station at ceiling or as otherwise indicated. Duct smoke detector shall be installed in compliance with the applicable mechanical or building code. Coordinate with Section 230900 and 230593 work. System Sensor #D2 series or approved equal.

B. Additional requirements for duct smoke detectors include requirements per Section 6.4 of NFPA-90A. Provide one duct smoke detector at each story to the connection to a common return and prior to any recirculation or fresh air inlet connection in air return systems having a capacity greater than 15,000 cfm and serving more than one story.

2.17 FIRE DAMPERS

A. General:

1. Provide UL labeled 3 hour rated fire dampers at 3-hour and greater penetrations.
2. Provide UL labeled 1½ hour rated fire dampers at less than 3-hour penetrations.
3. All dampers to be certified under the latest UL Standard. Certification based on former non-current standards is unacceptable.
4. All damper installations to conform with NFPA 90A and manufacturer's installation instructions. Details on plans are shown for reference only.
5. Install in ducts passing through floors, walls, and ceilings as required by code. Refer to Architectural and Mechanical plans for damper locations.
6. Provide fire and fire/smoke dampers in locations as required by chapter 7 of the IBC.

7. Provide sleeves, slip joints, retaining angles, duct access doors, ceiling access panels, etc., as required to check and service the fire dampers. Slip or break away joints are not allowed to be taped or sealed. Access doors shall be tight fitting hinged or sliding and shall have 1" high label reading "FIRE DAMPER" or "FIRE/SMOKE DAMPER".
8. All dampers to be designed for use in dynamic systems.
9. Dampers shall be rated for Leakage Class I. Leakage Class II may be used if damper size is smaller than available Leakage Class I dampers.
10. Coordinate with "Security Bars" for installation in detention housing and high security areas.
11. State Fire Marshall and local authority shall approve dampers for use.
12. Dampers shall have an installed pressure drop of no more than 0.10"w.g. at the free area velocity. See submittal requirements above.
13. Dampers shall be installed straight and true, level in all planes, and square in all dimensions. Dampers shall move freely without undue stress doe to twisting, racking, bowing, or other installation error. Do not install actuators in area where moisture can penetrate actuator or where temperature exceeds 120°F.
14. Sizing: All fire dampers shall be sized to provide equivalent free area through the damper equal to the connecting ductwork. In no case are dampers' pressure drops to exceed those stated below. See also submittal requirements in Part One of this section.

B. Radiation Ceiling Fire Dampers: Bladed ceiling fire damper constructed and tested in conformance with UL-555 (dynamic rating). Fire damper shall have a 165°F fusible link. Installation shall be in accordance with damper manufacturer's instructions. Provide fire blanket where required to obtain listed fire rating. Ruskin #CFD Series, Pottorff #CFD-15 Series or approved equal by CESCO, Air Balance, or Greenheck.

C. Dynamic Fire Dampers: Curtain fire damper constructed and tested in conformance with UL-555C. Fire damper shall have a 165°F fusible link. Fire damper shall be equipped for vertical penetrations with manufacturer supplied sleeve. Installation shall be in accordance with damper manufacturer's instructions. Curtain damper shall not be located in air stream during system operation, Style B or C. Clear inside opening through fire damper is to match clear inside opening of duct. Fire dampers in lined ducts are to match size of sheet metal duct. Provide duct and ceiling access panel as required. Ruskin#DIBD Series, Pottorff #VFD-10 Series and #VFD-30 Series, or approved equal by Air Balance, Greenheck or CESCO.

D. Combination Fire/Smoke Dampers:

1. General Requirements:

a. Install at rated corridor wall or ceiling penetrations, occupancy separation walls, area separation walls and where shown on plans. Low leakage fire/smoke damper (Leakage Class 1 unless otherwise stated below) with electric actuator. Fire damper shall be equipped for vertical wall penetrations with manufacturer supplied sleeve and fail closed on loss of power. Each damper shall be equipped with a controlled 15 second electric heat-actuated release device. This device is to be equipped with a push-button reset. No manual fusible links are permitted. Manufacturer shall provide factory assembled sleeve of 16" minimum length. Installation shall be in accordance with damper manufacturer's instructions. Coordinate power and smoke detector connections with electrical installer. Integral smoke detection and actuating devices may be used if listed and approved for such service. Comply with IBC. All combination smoke and fire dampers shall automatically reset from closed to open position upon the reapplication of power to actuators.

b. Actuators: All gear and housing shall be steel. The actuator shall be direct coupled and employ a steel toothed cold-weld clamp for connecting to damper

shafts. Aluminum clamps or set-screw attachments are not acceptable. Actuator shall be UL listed and manufactured under ISO 9001 quality control.

1. Actuator shall carry a manufacturer's 5-year warranty.
2. Actuator shall have microprocessor based motor controller providing electronic cut off at full open so that no noise can be generated while holding open. Holding noise level shall be inaudible. Actuator shall be incapable of burning out if stalled before full rotation is reached.
3. Dampers shall be installed straight and true, level in all planes, and square in all dimensions. Dampers shall move freely without undue stress due to twisting, racking, bowing, or other installation error.
4. Actuator shall have UL555S Listing by the damper manufacturer for 350°F and be rated for 20,000 cycles minimum. Actuator shall draw no more than 0.23A at 120V running, or 0.1A holding at 120V (27 VA and 10 VA respectively for 24V power) for 70 in-lb torque.
5. Stall and instantaneous type actuators are not acceptable.
6. Do not install in area where moisture can penetrate damper or actuator nor where actuator temperature exceeds 120°F.
7. All smoke and combination fire and smoke dampers shall be provided with Belimo Aircontrols FSNF120 (-S), FSNF24 (-S) actuators, or approved equal.
8. If a Honeywell ML-4115 actuator is submitted as an alternate, it must be provided with a time delay relay to cause the actuator to reset to drive open mode on momentary loss of power for less than 3 seconds.

2. Dampers for Low Velocity Applications (2000 fpm or below):

   a. Fire damper shall have 6" wide galvanized steel blades with silicone rubber edge seals.
   b. Pressure drop of a typical 24" x 24" size damper shall be no more than 0.05" w.g. at 1000 fpm velocity.
   c. Basis of Selection: Ruskin #FSD-37, Ruskin #FSD-60, Ruskin #FSD60FA, Pottorff #FSD-140 Series, Pottorff #FSD-150 Series, or approved equal by Greenheck, CESCO or Air Balance.

3. Dampers for High Velocity Applications (2001 fpm or above):

   a. Identical to above except, fire damper shall have 6" wide galvanized steel airfoil blades with silicone rubber edge seals.
   b. Pressure drop at 2000 fpm velocity to be no more than 0.08"w.g. for a 24" x 24"size.
   c. Basis of selection to be Ruskin FSD 60 with airfoil blade, Pottorf FSD-151, or approved equal air foil damper by Greenheck, CESCO or Air Balance.

4. Dampers for Ceiling Application:

   a. Where indicated on plans install at rated corridor ceiling penetrations.
   b. Integral smoke detection and actuating devices may be used if listed and approved for such service.
   c. Basis of Selection: Ruskin #FSD36-C, Pottorff #FSD-172, CESCO CFSD-21, Greenheck CFSD, or approved equal by Air Balance.

2.18 AIR BLENDERS

A. Prove air blenders of size as shown on Drawings, constructed of heavy gauge aluminum, all welded. Units shall be factory constructed and tested, and installed in accordance with manufacturer's recommendations. RM Products Co. or equal.

2.19 SOUND TRAPS

A. Sound traps shall be I.A.C., Vibro-Acoustics, Aerosonics, United McGill, Transonics, Ruskin, or approved equivalent. Sound traps shall be sized for a maximum air pressure drop and maximum air velocity as noted on schedule.

B. Materials

1. Outer casings of rectangular silencers shall be made of 22 gauge type #G-90 lock-former-quality galvanized steel.
2. Interior partitions for rectangular silencers shall be not less than 26 gauge type #G-90 galvanized lock-former-quality perforated steel.
3. Filler material shall be as indicated on the Schedules and as appropriate for the application:
   a. Standard fill: Filler material shall be inorganic glass fiber of a proper density to obtain the specified acoustic performance and be packed under not less than 5% compression to eliminate voids due to vibration and settling. Material shall be inert, vermin- and moisture-proof.
   b. Encapsulated fill for hospital or cleanroom applications: Filler material shall be inorganic glass fiber of a proper density to obtain the specified acoustic performance and be packed under not less than 5% compression to eliminate voids due to vibration and settling. Material shall be inert, vermin- and moisture-proof. Filler material shall be totally encapsulated and sealed with polymeric film of an appropriate thickness. The encapsulated fill material shall be separated from the interior perforated baffles by means of a noncombustible, erosion resistant, factory-installed, acoustic stand-off. It shall not be acceptable to omit the acoustic stand-off and try to compensate for its absence by means of corrugated baffles.
   c. Packless sound traps: No sound absorptive material of any kind is to be used in the silencers. The silencers shall attenuate air/gas transmitted noise solely by virtue of controlled impedance membranes and broadly tuned resonators.
   d. “Green” fill alternate: Acoustic fill material shall be 100% environmentally friendly, and constructed of recycled natural fibers. Each fiber shall be treated with an EPA registered fungal inhibitor in order to prevent mold, mildew, fungi, and pest protection. The fill material must not contain any harmful chemicals, irritants, and/or volatile organic compounds (VOCs) in order to prevent off-gassing.
4. Combustion ratings for the silencer acoustic fill shall be not greater than the following when tested to ASTM E 84, NFPA Standard 255, or UL No. 723:
   a. Flamespread Classification 25
   b. Smoke Development Rating 50

C. Construction

1. Units shall be constructed in accordance with the ASHRAE Guide recommendations for high pressure duct work. Seams shall be lock formed and mastic filled. Rectangular casing seams shall be in the corners of the silencer shell to provide maximum unit strength and rigidity. Interior partitions shall be fabricated from single-piece, margin-perforated sheets and shall have die-formed entrance and exit shapes so as to provide the maximum aerodynamic efficiency and minimum self-noise characteristics in the sound attenuator. Blunt noses or squared off partitions will not be accepted.
2. Attachment of the interior partitions to the casing shall be by means of an interlocking track assembly. Tracks shall be solid galvanized steel and shall be welded to the outer casing. Attachment of the interior partitions to the tracks shall be such that a minimum of 4 thicknesses of metal exist at this location. The track assembly shall

stiffen the exterior casing, provide a reinforced attachment detail for the interior partitions, and shall maintain a uniform airspace width along the length of the silencer for consistent aerodynamic and acoustic performance. Interior partitions shall be additionally secured to the outer casing with welded nose clips at both ends of the sound attenuator.

3. Sound attenuating units shall not fail structurally when subjected to a differential air pressure of 8 inches water gauge from inside to outside the casing. Airtight construction shall be provided by use of a duct sealing compound on the jobsite material and labor furnished by the contractor.

D. Acoustic Performance

1. All silencer ratings shall be determined in a duct-to-reverberant room test facility which provides for airflow in both directions through the test silencer in accordance with ASTM Specification E477-99. The test facility shall be NVLAP accredited for the ASTM E477-99 test standard. Data from a non-accredited laboratory will not be acceptable. The test set-up and procedure shall be such that all effects due to end reflection, directivity, flanking transmission, standing waves, and test chamber sound absorption are eliminated. Acoustic ratings shall include Dynamic Insertion Loss (DIL) and Self-Noise (SN) Power Levels both for FORWARD FLOW (air and noise in same direction) and REVERSE FLOW (air and noise in opposite directions) with airflow of at least 2000 fpm entering face velocity. Data for rectangular and tubular type silencers shall be presented for tests conducted using silencers no smaller than the following cross-sections:

a. Rectangular, inch: 24x24, 24x30, or 24x36, and
b. Tubular, inch: 12, 24, 36, and 48

E. Aerodynamic Performance

1. Static pressure loss of silencers shall not exceed those listed in the silencer schedule as the airflow indicates. Airflow measurements shall be made in accordance with ASTM specification E477-99 and applicable portions of ASME, AMCA, and ADC airflow test codes. Tests shall be reported on the identical units for which acoustic data is presented.

2.20 VARIABLE AIR VOLUME TERMINAL UNITS

A. Furnish and install variable volume zone boxes of the sizes and capacities shown on the Drawings.
B. The control assemblies shall be pressure independent and shall be able to be reset to any airflow between zero and maximum scheduled CFM. The valves shall be normally open. The differential static pressure of the basic assembly shall not exceed 0.25" W.G. for all sizes with inlet velocities of 2,000 FPM or less.
C. The air valve shall be galvanized steel or die cast aluminum; damper shafts shall operate in rustproof Delrin or equal, self-lubricating bearings. The air valve shall seat against durable gaskets and not exceed a 2% leakage rate per ARI standards.
D. The control device shall be designed to maintain constant flow regardless of inlet flow deflection. Duct inlets at 90° or less to the control device shall not alter the maximum or minimum factory setting by more than 10%. The assembly shall incorporate a multi-point averaging differential pressure sensor mounted on the inlet.
E. The assemblies shall be contained in a welded 26 gauge galvanized steel box internally lined with ½ inch, 1½ lb. insulation complying with NFPA 90A and UL 181 standards.
F. Acoustical lining is to be a scrim reinforced foil laminate using flexible 1½ lb. density insulation meeting the requirements of UL 181 and NFPA 90A. All edges are to be sealed from the airstream, and metal brackets used to secure discharge edges on single duct

terminals. For acute care facilities or surgery centers the inside surface of terminal units shall be galvanized sheet metal for a cleanable surface.

G. Fabricate and install 5 foot (minimum) acoustically lined sheet metal discharge plenum on all air terminal units. Discharge plenum shall be mounted downstream of reheat coils where applicable. Inside dimension of plenum shall be 2" larger in height and 4" larger in width than the outlet of the air terminal unit or reheat coil, whichever is greater. Refer to detail on plans for additional information. This is required for acoustic noise dissipation.

H. Hot Water Coil: Where scheduled on drawings, provide a single or double row hot water heating coil with aluminum fins mechanically bonded to copper coils. Coil velocity shall not exceed 700 FPM and static pressure loss shall not exceed .35" w.g. for a double row coil or 0.20"w.g. for a single row coil. Coil shall be pressure tested to 200 PSIG. Coil section to be based on 180°EWT and 140°LWT unless otherwise noted on schedule. Maximum water pressure drop shall be limited to 5 feet w.g. unless otherwise noted.

I. Electric Coil: Terminal manufacturer to factory install coil. Coil to be UL listed. They shall be housed in an attenuator section integral with the terminal with element grid recessed from unit discharge a minimum of 5" to prevent damage to elements during shipping. Elements shall be derated nickel chrome, supported by ceramic isolators a maximum of 3.5" apart, staggered for maximum thermal transfer and element life and balanced to ensure equal output per step. The integral control panel shall be housed in a NEMA 1 enclosure with hinged access door for access to all controls and safety device. Provide a primary automatic reset thermal cutout, a manual reset secondary thermal cutout, line fusing, mercury contactors per element, differential pressure airflow switch for proof of flow, and line terminal block. Coil shall be capable of operating under continuous duty at 120°F discharge temperature. Unit shall include an integral door interlock type disconnect switch which will not allow the access door to be opened while power is on. Coils 4kw to 8kw shall be 2 stage, 8kw and larger shall be 3-stage. Coordinate final voltages with Div. 26.

J. Controls to be direct digital. Provide boxes without operator. Provide factory mounted low voltage transformer of sufficient capacity to power the DDC controls. Coordinate control with temperature Control Contractor. Provide factory mounted operator and thermostat control if not provided by Control Contractor.

K. Manufacturer: Titus ESV-3000, Price SDV, Trane VC, Enviro-Tec SSD, Carnes AV, Tuttle & Bailey SDV, Nailor 3000, or approved equal by Krueger or Anemostat.

PART 3 - EXECUTION

3.1 DUCTWORK MATERIAL APPLICATION SCHEDULE

A. Fabricate ducts with galvanized sheet steel

1. All duct system appurtenances are to be the same material as ductwork including volume dampers and access panels.

3.2 DUCTWORK AND SPECIALTIES INSTALLATION

A. Ductwork is generally diagrammatically indicated and shall be generally installed as indicated. Do not scale Drawings for exact location of ducts. Install ducts to best suit field conditions and cooperate with other trades. Do not penetrate Structural members without consent of Architect or Structural Engineer. Check with Structural drawings prior to locating any penetrations. Duct sizes are indicated as net inside dimensions on the Drawings. The indicated dimensions shall be altered at the job site for the purpose of avoiding interferences and clearance difficulties to other dimensions producing the same air handling characteristics, provided such altered dimensions are approved by the Architect. Ducts shall be constructed in accordance with the latest edition of codes and standards identified in Part 1 and as shown on the Drawings.

1. Clean and pretreat surfaces before application of sealant. Conform to the manufacturer's cleaning procedures. Install sealants in conformance with manufacturer's instructions.
2. Vertical ducts or horizontal ductwork penetrating fire rated ceilings, roofs, walls and floors shall be fire separated with UL listed and labeled fire dampers. Provide additional fire dampers indicated on the Drawings and as otherwise required by the IBC and building inspector. Provide approved firestopping between damper frames and firewalls. Install fire dampers in accordance with NFPA Standards, requirements of the State Fire Marshal, and applicable codes. Ensure that fire dampers are installed in the open position.
3. Provide 16 gauge metal sleeve with 1" clearance and pack space around ducts through walls tight with fiberglass, and seal with Schuller Duxseal or approved 3M fire proof caulking, as required. For exposed ducts through walls, provide flat, sheet metal escutcheon to conceal fiberglass and wall opening.
4. Grilles, Registers and Diffusers: Install flush, squared, tightly sealed, and entirely covering sheet metal ductwork and gaskets. Thread sheet metal mounting screws tightly into sheet metal. All frames shall be selected to fit the ceiling type. Verify with Architectural Drawing. Each diffuser, grille and register shall be individually capable of balancing via duct mounted balancing dampers or attached opposed blade dampers. Provide unit opposed blade damper only where individual duct mounted balancing dampers are specifically noted as not provided. Duct connections shall fit securely to necks or collars behind face area. Provide all necessary transition pieces and duct collars to make connections from ductwork to neck sizes. Where ducts connect directly to necks or collars provide a minimum straight duct section of two times the duct diameter to the last elbow. Where minimum straight duct sections are not physically possible provide sheet metal plenum sized for approximately 500 fpm air velocity with duct tapped directly to side of plenum. Where building walls, floors and ceilings form portions of duct or plenum, provide gasketed angles or channels at junction points, securely bolted and sealed to building structure.
5. Install turning vanes in all mitered elbows in all ducts, so that tips are parallel with the sides of the ducts. Vanes shall be single thickness type. Tips of acoustical turning vanes on outside radius shall be flush with acoustical lining.
6. Provide flexible connections to completely isolate fans from direct contact with all sheet metal work.
7. Provide access panels or doors, as required, for access to valves, controllers, fire dampers and humidifier dispersion tubes. Access doors required in Product Conveying Vapor/Moisture Ductwork (see applicable paragraph above) shall not be installed in the bottom of the duct or in a manner to allow leaks.
8. Volume Dampers: Provide manual volume dampers in all low pressure supply, return and exhaust branch ductwork to grilles, diffusers, inlet and outlet openings to facilitate balancing of systems. These are to be provided as part of contract whether shown on plans or not. Where ceilings are not accessible, provide access door or remote damper operator.
9. Splitters and splitter dampers shall not be installed in medium or low pressure supply ductwork to VAV systems.

B. Hangers and Supports: Securely fasten all ductwork to the building construction by means of hangers, supports, guides, anchors, and sway braces to maintain duct alignment, to prevent sagging, and to prevent noise and excessive strain on ductwork due to movement under operating conditions.

1. Maximum spacing between hangers shall not exceed eight (8) feet.
2. Adequately mount and anchor all material and equipment as required. Include lateral bracing as required to prevent horizontal, seismic movement. Refer to IBC and architectural Drawings for seismic requirements.
3. Do not support ductwork from fans or any other pieces of equipment.

4. Powder driver fasteners shall not be used to support rectangular ducts of 40" maximum dimension. Powder driven fasteners shall not be allowed in existing facilities where electronic equipment is located.
5. Support round duct, 30" and larger, with two hangers at each support point.
6. Hangers and supports shall conform to SMACNA section "Hangers and Supports". Nail inserts, hangers and supports to formwork before slabs are poured. Cut off or remove nails, strap-ends and other projections, flush with concrete after forms are removed.
7. Support vertical ducts, passing through floors with two continuous angles screwed to the duct and bearing to the floor and conforming to SMACNA section "Riser Support-From Floor". Blocking or shimming ducts will not be permitted.

C. Other:

1. Fans: Align fans, motors, and drives. Install fans to render bearings accessible for lubrication without dismantling fans or ducts. Provide extended bearing oilers as required. Mount all fans on vibration isolators as specified.
2. Insulation: Properly and neatly apply insulation on all material and equipment and apparatus, as specified, including all fittings. Apply insulation over clean, dry surfaces, with adjoining sections firmly butted together and canvas smoothly pasted over. When vapor barriers are specified, install continuous overall external surfaces of the entire system.
3. Duct Sizing: Where duct sizes are not specifically shown on the plans or must be modified due to physical limitations, supply ducts may be sized at a maximum velocity of 1,500 fpm or 0.08" sp friction per 100 feet, whichever provides the larger duct, and return/exhaust/intake ducts may be sized at a maximum velocity of 1,000 fpm or 0.06" sp friction per 100 feet, whichever provides the larger duct.
4. Humidifiers: Humidifier installation shall be approved by manufacturer and coordinated with all other systems. Condensate piping shall include p-traps as recommended by the humidifier manufacturer. Insulate exposed piping as required by the code.
5. Access Floor Diffusers: The mounting ring for floor mounted diffusers are to be affixed to the floor tiles using a clamp insert or other method approved for use with the floor diffuser.

3.3 CONSTRUCTION AND SEALING CRITERIA

A. 233113 – Unless called out otherwise on drawings the pressure classification of ductwork shall be as follows:

Duct system:	**Location**	**Working pressure**	**Build to SMACNA pressure class**	**Build to SMACNA seal class:**
Outdoor air intake	From ambient intake to AHU	-1” wc	-2” wc	B
Med press Supply Air	From AHU to air terminal units	+6” wc	+10” wc	A
Med press Supply Air	From AHU to air terminal units	+4” wc	+6” wc	A
Med press Supply Air	From AHU to air terminal units	+2” wc	+3” wc	B
Low press Supply Air	Downstream of air terminal units to grilles, registers or diffusers.	low pressure	+1” wc	B
Low press Supply Air	From AHU to grilles, registers or diffusers.	low pressure	+1” wc	B

Duct system:	**Location**	**Working pressure**	**Build to SMACNA pressure class**	**Build to SMACNA seal class:**
Med. Press Return air	From air terminal units to AHU	-3" wc	-4" wc	A
Med. Press Return air	From air terminal units to AHU	-2" wc	-3" wc	B
Med. Press Return air	From air terminal units to AHU	-1" wc	-2" wc	B
Low press Return air	From return grilles to AHU	Low pressure	-1" wc	B
Transfer air	From grille to grille, or acoustic boots or "z" bends	Low pressure	+0.5" wc	C
Relief air	From AHU to discharge at ambient	+1" wc	+2" wc	B
General exhaust	From grille to exhaust fan	-1" wc	-2" wc	B
General exhaust	From exhaust fan to discharge at ambient	+1" wc	+2" wc	B
Washroom exhaust	From grille to exhaust fan	-1" wc	-2" wc	B
Washroom exhaust	From exhaust fan to discharge at ambient	+1" wc	+2" wc	B

B. 233113 – The default leakage classification of ductwork is as follows:

Duct working press. class:	**Low pressure - +/- 0.5"wc**	**+/-1" – +/-3"**	**+/-4" – +/-10" wc**
SMACNA Seal Class	C	B	A
Sealing Applicable	Transverse joints only	Transverse and longitudinal Joints	Joints, seams, and all wall penetrations
Rectangular sheet metal SMACNA Leakage Class	24	12	6
Round sheet metal SMACNA Leakage Class	12	6	3

3.4 MANDATORY CALIFORNIA DUCTWORK TESTING

A. All duct systems shall be sealed to a leakage rate not to exceed 6% of the fan flow if the duct systems are:

1. Connected to a constant volume, single zone system, air conditioners, heat pumps or furnaces, and
2. Serve less than 5,000 square feet of floor area, and
3. Have more than 25% duct surface area located in one or more of the following places:

   a. Outdoors, or
   b. In a space directly under a floor where the U-factor of the roof is greater than the U-factor of the ceiling, or
   c. In a space directly under a roof with fixed vents or openings to the outside or unconditioned spaces, or
   d. In an unconditioned crawlspace, or
   e. In other unconditioned spaces.

4. The leakage rate shall be confirmed through field verification and diagnostic testing in accordance with procedures set forth in the Nonresidential ACM Manual.

3.5 FIBERGLASS DUCTWORK INSTALLATION

A. Ductwork fabrication and installation to be inspected by a Qualified Fabricator certified by the material manufacturer. Oregon and Washington installations are to be inspected by E.J. Bartells Co.

3.6 COMBINATION FIRE, SMOKE DAMPER INSTALLATION

A. Install per manufacturer's and UL installation requirements.
B. Interlock operation of all fire smoke dampers to close dampers when the fans associated with the dampers are shut down. This also includes dampers in transfer ducts associated with system fans.

3.7 CONTROL DAMPER INSTALLATION

A. Note that installation of control dampers is a part of the mechanical contractor's work regardless of whether they are specified in this section or as part of products to be selected by the Control Contractor.
B. When electric actuators are provided, dampers shall be installed to allow direct over the shaft mounting of actuators. No connecting rods and stand off brackets shall be necessary.
C. Dampers shall be installed straight and true, level in all planes, and square in all dimensions. Dampers shall move freely without undue stress due to twisting, racking (parallellogramming), bowing, or other installation error.
D. Blades shall close completely. Leakage shall not exceed manufacturer's specifications at rated static.
E. Structural support shall be provided as necessary for all multi-section dampers.
F. Where blankoffs or structural supports obstruct duct or air passages, the decrease in free area shall not exceed 15% of the damper face area unless otherwise specified here or on plans.
G. No individual damper section may exceed 20 sq. ft.

3.8 SEISMIC REQUIREMENTS

A. See Section 230548 for specific requirements.
B. All HVAC equipment and machinery shall be anchored to withstand forces generated by earthquake motions. As a minimum, equipment and equipment frames shall be designed to withstand a force of 100% of the weight of the equipment and frame acting at its center of gravity. Anchorage of the equipment and/or frame to the structure shall be for a force of four times gravity also acting at the center of gravity.
C. The seismic calculations shall be the responsibility of contractor.

3.9 EQUIPMENT

A. Install equipment as shown on plans and in accordance with manufacturer's installation recommendations.

3.10 SUPPLY DIFFUSER AND REGISTER LOCATIONS

A. Coordinate location of supply outlets with ceiling mounted smoke detectors. Locate outlets or outlet distribution so as to prevent airflow from inhibiting the operation of smoke detectors. Locate ceiling outlets a minimum of 3'-0" from smoke detectors.

3.11 PAINTING

A. Where the interior surfaces of ductwork are visible through the blades of supply outlets, return inlets, and exhaust inlets - paint the interior visible surfaces with one coat of flat black paint.

3.12 FIELD QUALITY CONTROL

A. Do not insulate or conceal ductwork before inspection by Owner's Representative, Architect or Engineer. If ductwork is insulated and concealed prior this inspection the Contractor shall remove insulation and ceiling to permit inspection at no additional cost to the Owner. The Contractor shall replace the insulation and ceiling after final inspection at no additional cost to the Owner.

B. Ductwork Deflection Criteria:

1. Maximum inward and/or outward deflection at sheet-metal panels shall be ¾" under maximum static pressure operating conditions. Additional intermediate stiffening angles shall be installed where deflections exceed ¾".
2. Maximum inward and/or outward deflection at sheet-metal elbows and joints shall be ¼" under maximum static pressure operating conditions. Additional stiffening angles shall be installed where deflections exceed ¼".

C. Acceptance of duct systems shall be contingent upon conformance with the requirements specified in Section 230593 "Testing, Adjusting and Balancing".

3.13 ADJUSTING AND CLEANING

A. Clean the inside of plenums, casings, enclosures, fans, and accessible ductwork before starting fans. Blowout coils and condensate piping with compressed air. Install a clean set of filters in each system prior to testing and balancing. Proceed with testing and balancing. All dampers shall be locked in place.

B. Floor plenum cleanliness is vital to the success of under floor air distribution systems, and requires attention throughout the construction process. Contractor must thoroughly clean the air plenum area before the floor tiles are installed. Seal all floor openings in areas subject to construction dust and dirt getting into the floor plenum area. Refer to raised floor system manufacturer installation manual for more information.

END OF SECTION

SECTION 23 31 14 - DUCT AND COIL CLEANING

PART 1 - GENERAL

1.1 APPLICABLE REQUIREMENTS

A. All work to be furnished and installed under this section shall comply with all the requirements of General Conditions, Supplemental Conditions, Division 01 - General Requirements, Section 230500 - Basic Materials and Methods, and other Sections in Division 23 specified herein.

1.2 RELATED WORK IN OTHER SECTIONS

A. Section 230500: Basic Materials and Methods.

1.3 SCOPE

A. Clean the inside surface of all ductwork and plenums.
B. Clean all evaporator and condenser coils.
C. Clean all condensate pans.
D. Clean all fan blades and assemblies.
E. Clean all dampers, motors and linkages.

1.4 MAINTAINING EXISTING SERVICES

A. The existing heating, ventilating and air conditioning system shall be maintained to all occupied areas during the normal working week. Any exceptions to this rule must be arranged thru the Owner beforehand.

1.5 PROPER EQUIPMENT

A. The Contractor shall provide the power vacuum operating at a minimum of 16,000 C.F.M. at 21" W.C.; 25 CFM air compressor operating at 210 psi; electric power vent cleaner and reverse jet air flow nozzle, all staging, scaffold, ladders or similar equipment required to properly carry on the work. Suitable protective covering shall be provided by the Contractor in all areas of work operation. Any mechanical defects to be reported to all person/persons in charge.

1.6 EXPERIENCED SUPERVISION

A. All work shall be supervised by a Foreman having thorough knowledge and experienced in the cleaning of heating and air conditioning systems. The work shall be performed by experienced, qualified personnel. Contractor shall be responsible to coordinate with the Owner's Representative. This will insure that both parties are fully aware of work to be performed and time perimeters that work will be completed.

PART 2 - PRODUCTS

2.1 MATERIALS

A. All materials specified by brand names used for the work described herein shall be delivered to the job site in original, un-opened, clean containers with labels in place. All such

materials shall be of the brand and type specified. Substitution of any materials will not be permitted, unless pre-qualified and approved by the Owner's Representative.

2.2 GASKETING

A. Gasketing shall be a polyethylene foam, self adhering type with a minimum width of 1/4".

2.3 FIBERGLASS INSULATION MATERIAL

A. Fiberglass insulation material to be repaired will be of equal quality and thickness as contained in equipment requiring repair. Fiberglass will be sealed together by means of wall tacks, lagging tape lagging adhesive and lagging coating. Materials used will be of the highest quality (ie: Foster White, Foster Coating: respectively).

PART 3 - EXECUTION

3.1 STORAGE OF CONTRACTOR'S EQUIPMENT AND MATERIALS

A. The contractor shall remove all materials from job site daily. Owner shall not be responsible for loss, theft or damage of any materials, equipment or devices provided by the Contractor while used on Owner's property.

3.2 CLEAN-UP

A. Contractor shall, at the end of each shift, remove all waste, dirt and debris, resulting from the work performed. Such material shall be removed from the property and disposed of at the Contractor's expense, unless pre-qualified and approved by the Owner's Representative.

3.3 ACCESS OPENINGS AND DOORS

A. Access will be cut into duct for proper cleaning. Sheet metal panels with proper caulking and of the same or heavier gauge metal shall be installed when the ducts are cleaned.

3.4 CAULKING

A. Caulking shall be performed in a neat and effective manner. No caulking shall be applied over surfaces which contain dirt, rust, oil, scale, deteriorated caulking or other foreign matter which would affect adhesion. All caulking shall be Loctite Super Flex Caulking Compound or equivalent, as approved by the Owner's Representative.

3.5 COILS - (HEATING AND COOLING)

A. Cleaning will consist of high power wash downstream of coil first and then upstream of coil. A detergent solution specifically designed for this purpose will be used in washing. Process will be repeated until coils have been rendered clean.
B. High power wash will be performed with a water spray device that delivers a minimum of 500 P.S.I. Detergent cleaning shall be followed by a thorough rinsing with fresh water.
C. A degreasing solution shall be used in areas required, (i.e. oil, grease, rubber or adhesive) build-up of the coils. Any degreasing of coils shall be performed before final cleaning of coils to insure complete removal of any residual build-up.
D. Drain pans are to be cleaned and cleared before and after any pressure washing is performed, thus assuring complete and safe drainage.

3.6 PLENUM AREAS

A. All interior walls, ceilings and floors shall be power vacuumed. Plenum areas shall be inspected and sealed air tight with approved caulking compound.
B. Fiberglass insulating material found to be in need of repair will be repaired or replaced and properly bonded with adhesive, clips and proper lagging material.
C. Fiberglass material shall be sealed with Quaker Koat after it has been thoroughly hand vacuumed to insure proper adhesion.

3.7 FANS AND FAN HOUSING

A. Fan and fan assemblies shall be thoroughly cleaned by Power Vacuuming and high-pressure washing. Degreasing, scraping and wire brushing will be performed where required.

3.8 FILTERS

A. New filters shall be installed when unit has been completely cleaned. Filters shall be provided by the Owner.

3.9 DAMPERS, MOTORS AND LINKAGE

A. Dampers will be inspected and repaired.
B. Repairs will include straightening and aligning of blades and linkage.
C. All related equipment will be power vacuumed and high pressure washed where required.
D. Areas with rust or scale build-up will be wire brushed or scraped.
E. All damper motors and linkage will be lubricated and set into their original position upon completion of work in plenum areas.
F. All ducts shall be thoroughly cleaned by power vacuuming. Ductwork that does not allow complete access shall be entered by means of access holes.
G. All ducts will be cleaned, and inspected, as work proceeds. Any major repairs will be brought to the attention of the Owner's Representative.
H. Minor repairs (ie: caulking, sealing, reconnecting) of ductwork will be performed in the normal manner of the contractor's work.

3.10 DAMAGE BY DIRT OR DUST

A. The Contractor shall be responsible for all damage to any part of the Owner's premises, equipment or machinery due to dirt or dust attributed to the negligence of his work. The Contractor shall clean, repair or replace such damages at no expense to the Owner.

3.11 CLOSING IN OF UNINSPECTED WORK

A. Contractor shall not allow or cause any of the work to be covered up or enclosed until it has been inspected and approved by an authorized person. Should any of his work be covered up or enclosed before such inspection, he shall, at his own expense, uncover the work, and after it has been inspected and approved, make all repairs with such materials as may be necessary to restore all his work to its original and proper conditions.

END OF SECTION

SECTION 233413 – FANS AND VENTS

PART 1 - GENERAL

1.1 APPLICABLE REQUIREMENTS

A. All work to be furnished and installed under this section shall comply with all the requirements of General Conditions, Supplemental Conditions, Division 01 - General Requirements, Section 230500 - Basic Materials and Methods, and other Sections in Division 23 specified herein.

1.2 SCOPE

A. All work to be furnished and installed under this Section shall comply with all the requirements of Division 1, and shall include, but not necessarily be limited to, the following:

1. Spun Aluminum and Steel Housed Centrifugal Exhaust Fans

    a. General Duty Spun Aluminum Exhaust fan
    b. Upblast Spun Aluminum Exhaust Fan for roof or sidewall mount
    c. Upblast Spun Steel Exhaust Fan for high temperature kitchen exhaust

1.3 RELATED WORK SPECIFIED ELSEWHERE

A. Section 230500: Basic Materials and Methods
B. Section 230593: Testing, Adjusting and Balancing
C. Section 230700: Mechanical Insulation
D. Section 233113: Air Distribution
E. Division 26: Electrical

1.4 QUALITY ASSURANCE

A. Manufacturer's Qualifications: Provide air handling units that are the standard product of an equipment manufacturer regularly engaged in the production of such units who issues complete catalog information on such products. Units shall not be fabricated by the Contractor.
B. Certifications: Provide certified ratings of units based on tests performed in accordance with ARI 430, "Central-Station Air Handling Units."
C. Codes and Standards: Provide air handling units conforming to the requirements of the latest addition of the following:

1. Air Movement and Control Association (AMCA):

    a. 99 standards Handbook
    b. 210 Laboratory Methods of Testing Fans for Rating [Unit shall bear AMCA Certified Rating Seal]
    c. 300 Reverberant Room Method for Sound Testing of Fans [Unit shall bear AMCA Certified Rating Seal]
    d. 301 Methods for Calculating Fan Sound Ratings from Laboratory Test Data
    e. 500 Test Method for Louvers, Dampers, and Shutters

2. American National Standards Institute (ANSI):

    a. 9 Load Ratings and Fatigue Life for Ball Bearings
    b. 11 Load Ratings and Fatigue Life for Roller Bearings
    c. 900 Test Performance of Air Filter Units

3. Air-Conditioning and Refrigeration Institute (ARI):

a. 350 Sound Rating of Non-Ducted Indoor Air-Conditioning Equipment
b. 410 Forced-Circulation Air-Cooling and Air-Heating Coils
c. 430 Central-Station Air-Handling Units
d. 440 Room Fan-Coil Air-Conditioners

4. American Society of Heating, Refrigerating and Air-Conditioning Engineers (ASHRAE):

   a. 15 Safety Code for Mechanical Refrigeration

5. National Electrical Manufacturers Association (NEMA): Except for motors, provide electrical components required as part of air handling units, which comply with NEMA Standards.
6. National Fire Protection Association (NFPA): Provide air handling unit internal insulation having flame spread rating not higher than 25 and smoke developed rating not higher than 50:

   a. 70 National electrical Code
   b. 90A Standard for the Installation of Air Conditioning and Ventilating Systems
   c. 90B Standard for the Installation of Warm Air Heating and Air Conditioning Systems

7. Sheet Metal and Air Conditioning Contractors' National Association, Inc. (SMACNA): Comply with applicable SMACNA standards including "HVAC Duct Construction Standards - Metal and Flexible."
8. Underwriters Laboratories, Inc. (UL): Except for motors, provide electrical components required as part of air handling units, which have been listed and labeled by UL.

1.5 SUBMITTALS

A. Product Data: Submit manufacturer's technical product data for air handling units showing dimensions, weights, capacities, ratings, fan performance with operating point clearly indicated, motor electrical characteristics, and finishes of materials, installation instructions, sound and vibration test report, and bearing life calculations.
B. Shop Drawings: Submit shop drawings showing unit dimensions, weight loadings, required clearances, field connection details and methods of support. Draw to a scale of 1/4” per one foot. Include field fabricated mixing boxes, dampers and duct connections.
C. Maintenance Data: Submit maintenance instructions, including instructions for lubrication, filter replacement, motor and drive replacement, and spare parts lists. Include this data, product data, shop drawings, and wiring diagrams in operating and maintenance manuals.

1.6 ENVIRONMENTAL REQUIREMENTS

A. Do not operate units for any purpose, temporary or permanent, until ductwork is clean, filters are in place, bearings lubricated, and fan has been test run under observation.

1.7 DELIVERY, STORAGE, AND HANDLING

A. Deliver unit to the site in containers with manufacturer's stamp or label affixed.
B. Store and protect equipment and products against dirt, water, chemical, and mechanical damage. Do not install damaged unit - remove from project site.

1.8 WARRANTY

A. Provide one-year (12 months) warranty. The warranty shall include parts, labor, travel costs, and living expenses incurred by the manufacturer to provide factory authorized service.

1.9 SAFETY PROVISIONS

A. Provide all open drives and fan wheels subject to maintenance and potential entanglement with protective guards or screens meeting OSHA requirements.

PART 2 - PRODUCTS

2.1 GENERAL FAN REQUIREMENTS

A. Construction, Rating and Testing: Provide fans constructed and factory tested in accordance with the Air Moving and Conditioning Association (AMCA). All fan wheels shall be statically and dynamically balanced. Size and capacity as indicated on the Drawings. Provide extended bearing lubrication fittings where necessary to assure accessibility of all lubrication points.
B. Motors and Drives: Provide premium efficiency drip-proof motors with temperature rise not greater than 40 degrees C above ambient temperature. Provide belt drive assembly capable of 150% of the motor rated horsepower on one less than the total number of belts, for belt drives with two or more belts. All drives shall have adjustable sheaves to allow adjustment of ±20%. Provide two speed, two winding motors where indicated on schedules.
C. Accessories: Provide, as indicated on the Drawings and specified in other paragraphs of this Section, all related accessories to match the fan section, including access sections, diffusion sections, transition sections, flexible connections, vibration eliminators, and belt guards.
D. Submissions: For shop drawings include complete dimensional and physical data, CFM, SP, HP, discharge arrangement, rotation, class, base details, and fan curves.

2.2 SPUN ALUMINUM AND STEEL HOUSED CENTRIFUGAL EXHAUST FANS

A. Manufacturer: Models as scheduled manufactured by Greenheck, Carnes, Cook, Penn or approved equal.
B. General Duty Spun Aluminum Exhaust Fan

1. Direct Drive: Spun aluminum exhaust fans shall be direct drive type.

a. The fan wheel shall be centrifugal backward inclined, constructed of aluminum and shall include a wheel cone carefully matched to the inlet cone for precise running tolerances. Wheels shall be statically and dynamically balanced. The fan housing shall be constructed of heavy gauge aluminum with a rigid internal support structure and a birdscreen.
b. Motors shall be mounted out of the airstream on vibration isolators. Fresh air for motor cooling shall be drawn into the motor compartment through a large space between the fan shroud and the motor cover. Motors shall be readily accessible for maintenance. A disconnect switch shall be factory installed and wired from the fan motor to a junction box within the motor compartment.

1) Variable speed capability: For all direct drive fans with motors through ¾” hp, the fan shall be equipped with a DC electronic commutation type motor (ECM). Motor shall be speed controllable to 20% of full speed (80% turndown). Speed shall be controlled by a potentiometer dial mounted at the motor or by a 0-10 vdc signal. Motor shall be 85% efficient at all speeds.

c. A conduit chase shall be provided through the curb cap to the motor compartment for ease of electrical wiring.
d. All fans shall bear the AMCA Certified Ratings Seal for sound and air performance. Each fan shall bear a permanently affixed manufacturer's

engraved metal nameplate containing the model number and individual serial number for future identification.

2. Belt-drive: Spun aluminum exhaust fans shall be belt driven type.

   a. Fan wheel shall be centrifugal backward inclined, constructed of aluminum and shall include a wheel cone carefully matched to the inlet cone for precise running tolerances. Wheels shall be statically and dynamically balanced. The fan housing shall be constructed of heavy gauge aluminum with a rigid internal support structure and a birdscreen.
   b. Motors shall be heavy duty ball bearing type, carefully matched to the fan load, and furnished at the specified voltage, phase and enclosure. Drive frame assembly shall be constructed of heavy gauge steel. Motors and drives shall be mounted on vibration isolators, out of the airstream. Fresh air for motor cooling shall be drawn into the motor compartment through a large space between the fan shroud and the motor cover. Motors and drives shall be readily accessible for maintenance.
   c. Precision ground and polished fan shafts shall be mounted in permanently sealed, lubricated pillow block ball bearings. Bearings shall be selected for a minimum L10 life in excess of 100,000 hours (L50 life of 500,000 hours) at maximum cataloged operating speed. Drives shall be sized for a minimum of 150% of driven horsepower. Pulleys shall be of the cast type, keyed and securely attached to the wheel and motor shafts. Motor pulleys shall be adjustable for final system balancing.
   d. A disconnect switch shall be factory installed and wired from the fan motor to a junction box installed within the motor compartment. A conduit chase shall be provided through the base to the motor compartment for ease of electrical wiring.
   e. All fans shall bear the AMCA Certified Ratings Seal for sound and air performance.
   f. Each fan shall bear a permanently affixed manufacturer's engraved metal nameplate containing the model number and individual serial number for future identification.

C. Upblast Spun Aluminum Exhaust Fan for Roof or Sidewall Mount

1. Direct Drive:

   a. Spun aluminum exhaust fans shall be upblast centrifugal direct drive type. The fan wheel shall be centrifugal backward inclined, constructed of aluminum and shall include a wheel cone carefully matched to the inlet cone for precise running tolerances. Wheels shall be statically and dynamically balanced. The fan housing shall be constructed of heavy gauge aluminum with a rigid internal support structure.
   b. Motors shall be mounted out of the airstream on vibration isolators. Fresh air for motor cooling shall be drawn into the motor compartment free of discharge contaminants. Motors shall be readily accessible for maintenance. A disconnect switch shall be factory installed and wired from the fan motor to a junction box within the motor compartment. A conduit chase shall be provided through the curb cap to the motor compartment for ease of electrical wiring.

      1) Variable speed capability: For all direct drive fans with motors through ¾” hp, the fan shall be equipped with a DC electronic commutation type motor (ECM). Motor shall be speed controllable to 20% of full speed (80% turndown). Speed shall be controlled by a potentiometer dial mounted at the motor or by a 0-10 vdc signal. Motor shall be 85% efficient at all speeds.

c. All fans shall bear the AMCA Certified Ratings Seal for sound and air performance.
d. Each fan shall bear a permanently affixed manufacturer's engraved metal nameplate containing the model number and individual serial number for future identification.
e. Fan Arrangement:

1) Roof Mounted Upblast Exhaust Fans A leakproof fan housing shall be constructed with a one piece windband with an integral rolled bead for added strength. Fans shall be Model CUE as manufactured by Greenheck.
2) Sidewall Mounted Exhaust Fans A leakproof fan housing shall be constructed with a one piece windband with an integral rolled bead for added strength. Fan shall be provided with a mounting plate, which is attached and sealed to the wall prior to locating the entire unit.

2. Belt-drive: Spun aluminum exhaust fans shall be belt driven type.

a. Fan wheel shall be centrifugal backward inclined, constructed of aluminum and shall include a wheel cone carefully matched to the inlet cone for precise running tolerances. Wheels shall be statically and dynamically balanced. The fan housing shall be constructed of heavy gauge aluminum with a rigid internal support structure. The windband shall be welded to the one-piece curb cap and on all sizes with UL/CUL-762.
b. Motors shall be heavy duty ball bearing type, carefully matched to the fan load, and furnished at the specified voltage, phase and enclosure. Drive frame assembly shall be constructed of heavy gauge steel. Motors and drives shall be mounted on vibration isolators, out of the airstream. Fresh air for motor cooling shall be drawn into the motor compartment through a tube sized for sufficient fresh air to provide motor cooling. Motors and drives shall be readily accessible for maintenance.
c. Precision ground and polished fan shafts shall be mounted in permanently sealed, lubricated pillow block ball bearings. Bearings shall be selected for a minimum L10 life in excess of 100,000 hours (L50 life of 500,000 hours) at maximum cataloged operating speed. Drives shall be sized for a minimum of 150% of driven horsepower. Pulleys shall be of the cast type, keyed and securely attached to the wheel and motor shafts. Motor pulleys shall be adjustable for final system balancing.
d. A NEMA 3R disconnect switch shall be factory installed and wired from the fan motor to a junction box installed within the motor compartment. A conduit chase shall be provided through the base to the motor compartment for ease of electrical wiring.
e. All fans shall bear the AMCA Certified Ratings Seal for sound and air performance.
f. Each fan shall bear a permanently affixed manufacturer's engraved metal nameplate containing the model number and individual serial number for future identification.
g. Fan Arrangement:

1) Roof Mounted Upblast Exhaust Fans A leakproof fan housing shall be constructed with a one piece windband with an integral rolled bead for added strength.
2) Sidewall Mounted Exhaust Fans A leakproof fan housing shall be constructed with a one piece windband with an integral rolled bead for added strength. Fan shall be provided with a mounting plate, which is attached and sealed to the wall prior to locating the entire unit.

h. Options:

1) Fans shall be Listed by Underwriters Laboratory for UL/cUL 762 Listed for all electrical components and grease removal
2) Grease Provisions:
   a) Drain connection shall be constructed of aluminum and allow for a single point drainage of grease, water or other residues.
   b) Grease Trap shall include the drain connection and shall be constructed from aluminum. The unit shall collect grease and water from the fan and extract the grease from the water for ease of grease disposal
3) Easy Clean Options: Hinge kit shall be constructed of heavy gauge aluminum hinges and shall include hold open cables for field installation. Non Stick wheel shall be constructed of aluminum with a non stick coating similar to Teflon® as manufactured by Dupont. Clean out port shall have a hole on the outside of the windband and a grease repellent compression rubber fit, allowing access to entire wheel for cleaning.
4) Curb Extensions: Shall be mounted between roof curb and roof mounted fans to meet NFPA requirements of 40 in. minimum discharge above the roof when mounted on a minimum 8 in. high roof curb.
5) Windband Extension shall be constructed from heavy gauge aluminum tube that raises the discharge an additional 36 inches.
6) Smoke Exhaust Option:
   a) Provide dual belt drives be sized for a minimum of 150% of driven horsepower. Pulleys shall be of the cast type, keyed and securely attached to the wheel and motor shafts. Motor pulleys shall be adjustable for final system balancing.
   b) Fans shall be listed by Underwriters Laboratory for UL/cUL 705 for electrical components and UL/cUL Listed for Emergency Smoke Control Systems (500˚ F (260˚ C) for 4 hours and 1,000˚ F (538˚ C) for 15 minutes).

D. Upblast Spun Steel Exhaust Fan for High Temperature Kitchen Exhaust

1. General: Provide for charbroil and solid fuel burning exhaust applications
2. Spun steel exhaust fans shall be centrifugal belt driven type. Fan wheel shall be centrifugal backward inclined type. The wheel shall be constructed of steel and coated with a non stick coating similar to Teflon® as manufactured by Dupont. Wheel shall include a wheel cone carefully matched to the inlet cone for precise running tolerances. Wheels shall be statically and dynamically balanced.
3. The fan housing shall be constructed of 16 gauge galvanized steel with a rigid internal support structure and shall be leakproof. The fan housing shall be constructed with a one piece windband with an integral rolled bead for added strength and shall be joined to the curbcap with a continuously welded seam.
4. Fan's windband shall have a Clean Out Port, a large diameter hole on the outside of the fan's windband with a grease repellent compression rubber fit, allowing access to entire wheel for cleaning.
5. Motors shall be heavy duty ball bearing type, carefully matched to the fan load, and furnished at the specified voltage, phase and enclosure. Drive frame assembly shall be constructed of heavy gauge galvanized steel. Motors and drives shall be mounted on heavy duty true vibration isolators, out of the airstream. Fresh air for motor cooling shall be drawn into the motor compartment through a ten square inch tube free of discharge contaminants. Motors and drives shall be readily accessible for maintenance. Precision ground and polished 1 inch minimum diameter fan shafts shall be mounted in cast pillow block lubricatable ball bearings. Bearings shall be selected for a minimum L10 life in excess of 100,000 hours (L50 life of 500,000 hours) at maximum cataloged operating speed. Dual drives shall be sized for a minimum of

150% of driven horsepower. Pulleys shall be of the cast type, keyed and securely attached to the wheel and motor shafts.

6. Motor pulleys shall be adjustable for final system balancing. All fans shall have a dual belt and pulley system.
7. A NEMA-3R disconnect switch shall be factory installed and wired from the fan motor to a junction box installed outside the motor compartment.
8. Certification and Identification:
   a. All fans shall bear the AMCA Certified Ratings Seal for sound and air performance.
   b. Each fan shall bear a permanently affixed manufacturer's engraved metal nameplate containing the model number and individual serial number for future identification.
   c. Fans shall be Listed by Underwriters Laboratory for UL/cUL 762 Listed for all electrical components and grease removal. Grease Trap shall include the drain connection. The unit shall collect grease and water from the fan and extract the grease from the water for ease of grease disposal.
9. Hinge kit shall be constructed of heavy gauge hinges and shall include hold open cables for field installation.

PART 3 - EXECUTION

3.1 INSTALLATION

A. Coordinate motor starters with Div. 26 and control contractor.
B. Install in accordance with manufacturer's instructions.
C. Examine site to verify if site is ready to receive work. Provide layout drawings of air handlers and fan locations to electrical installer.
D. Install unit on vibration isolators.
E. Install 3" flexible duct connection at inlets and outlets of units.
F. Control installers shall install all wiring associated with control signals into the fan starters.
G. Electrical installer shall install all line voltage power wiring and conduit. Coordinate with Division 26 work.

3.2 MANUFACTURER'S START-UP SERVICES

A. The manufacturer shall provide start-up service in the form of a factory trained service technician. The service technician shall verify correct installation, verify unit mounting, verify fan rotation, verify spring isolator adjustments, verify control wiring, verify power wiring, start-up the fans, and check for proper operation. The service technician shall provide final adjustments to meet the specified performance requirements. Fully staffed parts and service personnel shall be within four hours travel from the job site.

END OF SECTION

SECTION 23 41 00 - AIR FILTRATION

PART 1 - GENERAL

1.1 DESCRIPTION OF WORK

A. The requirements of Section 23 05 00 apply to all Work of Division 23.

B. Provide all materials for the cleaning and filtering of the air supply as indicated on the Drawings and as specified.

1.2 QUALITY ASSURANCE

A. All panel and extended surface air filters to be tested and rated in accordance with the ASHRAE Test Method Standard 52.1 and 52.2.

B. All filter material to conform to Class I of California Code of Regulations (CCR) Title 19.80.03.

C. Filters shall comply with State Fire Marshal Standard 51-6, and California Code of Regulations T-19.

D. Comply with ARI 850

1.3 CONSTRUCTION SUBMITTALS

A. Submit shop drawings and product data for filters and filter holding frames.

B. LEED certification data as specified in Division 1, Section 01 81 13, “Sustainable Design Requirements”, for the following LEED credits:

1. Credit IEQ 3.1 & 3.2, Construction IAQ Management Plan

1.4 EXTRA MATERIALS

A. Furnish extra materials described below that match products installed and that are packaged with protective covering for storage and identified with labels describing contents.

1. Provide one complete set of filters for each filter bank. If system includes pre-filters, provide only pre-filters.
2. Provide one container of red oil for inclined manometer filter gage.

B. Provide temporary filters for all fans operated during construction; after all construction dirt has been removed from the building, install new filter at no additional cost to the District. In addition to temporary filters at filter location, provide temporary filters on all duct openings which will operate under a negative pressure.

1. Filters used for temporary operation shall be the same as for permanent filters for the application. Filters used at duct openings may be 1-inch thick pleated media disposable type.
2. Provide for a maximum of three changes of the return-air media filters during the phase of construction requiring permanent ventilation.

PART 2 - PRODUCTS

2.1 MANUFACTURER'S

A. Filters:

1. AAF International
2. Farr Co.
3. Viledon
4. Purafil, Inc.

2.2 AIR FILTERS

A. General:

1. Filters shall be 2-inch thick, medium efficiency pleated, disposable type, consisting of a nonwoven cotton and synthetic fabric media, with anti-microbial agent. The effective filter area shall be no less than 4 to 6 square foot media for each square foot of filter face area.
2. The media support shall be a welded wire grid, formed to affect a radial pleat design, with media bonded thereto.
3. The enclosing frame shall be heavy duty beverage board having diagonal support members bonded to both sides of pleats. Bond the inside periphery of the frame to the filter pack.
4. Filters shall be of the following distinct standard sizes:
   a. 12x24x2
   b. 16x20x2
   c. 16x25x2
   d. 20x20x2
   e. 20x24x2
   f. 20x25x2
   g. 24x24x2
   h. 25x25x2
   i. 20x50x2
5. Filter media must be polyester, not fiberglass.

B. MERV 8 Filters:

1. The air filters shall be of the high efficiency, totally rigid and totally disposable type. Each filter shall consist of glass fiber media, support grid, stabilizers, diagonal support bracing and enclosing frame. Air filters shall have an average efficiency of 50 percent as determined by ASHRAE 52.2-2007 test method.
2. Filter media shall be of high density microfine glass fibers. The filter media shall have an average arrestance of not less than 95% on ASHRAE Standard (52.2-2007). Filters shall be listed by Underwriters Laboratories as Class 2.
3. The media support grid shall be a welded wire grid, with an effective open area of not less than 96% and shall be bonded to the filter media. The grid shall be designed to support the media both vertically and horizontally.
4. The contour stabilizers shall be galvanized steel and shall be permanently installed on both the air entering and air exiting sides of the filter media pack.
5. The enclosing frame shall be constructed of galvanized steel. The media pack shall be mechanically and chemically bonded to the inside of the enclosing frame. The enclosing frame shall be equipped with galvanized steel diagonal support braces. The diagonal braces shall be mechanically fastened to each contour stabilizer.
6. Packaging: After the filter passes all tests, it shall be cleaned and packaged in a plastic bag.
7. Filter media must be polyester, not fiberglass.

C. MERV 13 Filters

1. The air filters shall be of the high efficiency, totally rigid and totally disposable type. Each filter shall consist of glass fiber media, support grid, stabilizers, diagonal support bracing and enclosing frame. Air filters shall have an average efficiency of 85 percent as determined by ASHRAE 52.2-2007 test method.
2. Filter media shall be of high density microfine glass fibers. The filter media shall have an average arrestance of not less than 99% on ASHRAE Standard (52.2-2007). Filters shall be listed by Underwriters Laboratories as Class 2.
3. The media support grid shall be a welded wire grid, with an effective open area of not less than 96% and shall be bonded to the filter media. The grid shall be designed to support the media both vertically and horizontally.
4. The contour stabilizers shall be galvanized steel and shall be permanently installed on both the air entering and air exiting sides of the filter media pack.
5. The enclosing frame shall be constructed of galvanized steel. The media pack shall be mechanically and chemically bonded to the inside of the enclosing frame. The enclosing frame shall be equipped with galvanized steel diagonal support braces. The diagonal braces shall be mechanically fastened to each contour stabilizer.
6. Packaging: After the filter passes all tests, it shall be cleaned and packaged in a plastic bag.
7. Filter media must be polyester, not fiberglass.

2.3 UNIVERSAL HOLDING FRAME

A. Holding frame shall be American Air Filter, Camfarr Type 8.

B. Universal holding frames shall be constructed of not less than 16 gauge galvanized steel. They shall be equipped with polyurethane foam gaskets, fasteners and filter centering dimples. The four sealing flange corners shall be flush mitered and secured in order to form a uniform sealing and gasketing surface. The in-line depth shall be not less than 2.69" in order to effect adequate bearing surface for built-up filter banks. Filter fasteners shall be capable of being installed without the requirement of tools, nuts or bolts. The universal holding frame shall be designed to accommodate standard size filters with the application of the appropriate type fastener.

C. The Design-Builder shall provide support systems, calculation and details prepared and stamped by a Structural Engineer who shall be registered in the State of California.

2.4 FILTER GAGES

A. Direct Reading Dial: 3-1/2 inch diameter diaphragm actuated dial in metal case, vent valves, black figures on white background, front recalibration adjustment, range 0-3, 2.0 inch WG, 3 percent of full scale accuracy. DP ranges: 0-1.0” for pre-filters and 0-2.0” for final filters.

B. Accessories: Static pressure tips with integral compression fittings, 1/4 inch aluminum tubing, 2-way or 3-way vent valves.

PART 3 - EXECUTION

3.1 INSTALLATION

A. Install all air cleaning devices in accordance with approved shop drawings and the manufacturer's printed recommendations.

B. Install differential magnahelic pressure gauges across each filter bank.

C. Prevent passage of unfiltered air around filters with felt, rubber, or neoprene gaskets.

D. Do not operate fan system until filters (temporary) are in place. Replace temporary filters used during construction.

E. Install filter gage static pressure tips upstream and downstream of filters. Mount filter gages on outside of filter housing or filter plenum, in accessible position. Adjust and level.

F. Provide alarm to indicate the time for change-out. Typical for all filter banks.

G. Filter banks shall be installed without any measurable air leakages.

3.2 TEMPORARY FILTERS

A. Provide one set for each unit of fan belts and filters for construction, provide one set of filters for test and balance replace filters with one set of new filters prior to building handover.

B. After completion of work and before final testing and balancing of the air handling systems, provide the specified permanent filters.

C. Provide extra 1-year supply of filters for all air handling units and fan coil units.

END OF SECTION

SECTION 23 74 13 - PACKAGED HVAC UNITS

PART 1 - GENERAL

1.1 APPLICABLE REQUIREMENTS

A. All work to be furnished and installed under this section shall comply with all the requirements of General Conditions, Supplemental Conditions Division 01 - General Requirements, Section 230500 - Basic Materials and Methods, and other Sections in Division 23 specified herein.

1.2 SCOPE

A. All work to be furnished and installed under this Section shall comply with all the requirements of Division 01, and shall include, but not necessarily be limited to, the following:

1. Packaged unit.
2. Controls and control connections.
3. Electrical power connections.
4. Roof mounting frame and base.

1.3 RELATED WORK SPECIFIED ELSEWHERE

A. Section 230500: Basic Materials and Methods
B. Section 230593: Testing, Adjusting and Balancing
C. Section 230700: Mechanical Insulation
D. Section 230900: Controls and Instrumentation
E. Section 233113: Air Distribution
F. Division 26: Electrical

1.4 QUALITY ASSURANCE

A. Manufacturer's Qualifications: Provide packaged units that are the standard product of an equipment manufacturer regularly engaged in the production of such units who issues complete catalog information on such products. Units shall not be fabricated by the Contractor.
B. Codes and Standards: Provide air handling units conforming to the requirements of the latest addition of the following:

1. Air Movement and Control Association (AMCA):

   a. 99Standards Handbook
   b. 210Laboratory Methods of Testing Fans for Rating [Unit shall bear AMCA Certified Rating Seal]
   c. 300Reverberant Room Method for Sound Testing of Fans [Unit shall bear AMCA Certified Rating Seal]
   d. 301Methods for Calculating Fan Sound Ratings from Laboratory Test Data
   e. 500Test Method for Louvers, Dampers, and Shutters

2. American National Standards Institute (ANSI):

   a. 9Load Ratings and Fatigue Life for Ball Bearings
   b. 11Load Ratings and Fatigue Life for Roller Bearings
   c. 900Test Performance of Air Filter Units

3. Air-Conditioning and Refrigeration Institute (ARI):

   a. 210Unitary Air Conditioning Equipment
   b. 270Sound Rating of Outdoor Unitary Equipment

4. American Society of Heating, Refrigerating and Air-Conditioning Engineers (ASHRAE):

   a. 15Safety Code for Mechanical Refrigeration

5. National Electrical Manufacturers Association (NEMA): Except for motors, provide electrical components required as part of air handling units, which comply with NEMA Standards.
6. National Fire Protection Association (NFPA): Provide unit internal insulation having flame spread rating not higher than 25 and smoke developed rating not higher than 50:

   a. 70National electrical Code
   b. 90AStandard for the Installation of Air Conditioning and Ventilating Systems
   c. 90BStandard for the Installation of Warm Air Heating and Air Conditioning Systems

7. Sheet Metal and Air Conditioning Contractors' National Association, Inc. (SMACNA): Comply with applicable SMACNA standards including "HVAC Duct Construction Standards - Metal and Flexible."
8. Underwriters Laboratories, Inc. (UL): Except for motors, provide electrical components required as part of units, which have been listed and labeled by UL.

1.5 PRODUCT SUBSTITUTIONS

A. The Contractor shall certify the following items are correct when using substituted products other than those scheduled or shown on the drawings as a basis of design:

   1. The proposed substitution does not affect dimensions shown on drawings.
   2. The Contractor shall pay for changes to building design, including engineering design, detailing, structural supports, and construction costs caused by proposed substitution.
   3. The proposed substitution has no adverse effect on other trades, construction schedule, or specified warranty requirements.
   4. Maintenance and service parts available locally are readily obtainable for the proposed substitute.

B. The Contractor further certifies function, appearance, and quality of proposed substitution are equivalent or superior to specified item.
C. The Contractor agrees that the terms and conditions for the substituted product that are found in the contract documents apply to this proposed substitution.

1.6 SUBMITTALS

A. Product Data: Submit manufacturer's technical product data for packaged units showing dimensions, weights, capacities, ratings, fan performance with operating point clearly indicated, motor electrical characteristics, finishes of materials, installation instructions, sound and vibration test report, and bearing life calculations.
B. Maintenance Data: Submit maintenance instructions, including instructions for lubrication, filter replacement, motor and drive replacement, and spare parts lists. Include this data, product data, shop drawings, and wiring diagrams in operating and maintenance manuals; in accordance with requirements of Division 01.

1.7 ENVIRONMENTAL REQUIREMENTS

A. Do not operate units for any purpose, temporary or permanent, until ductwork is clean, filters are in place, bearings lubricated, and fan has been test run under observation.

1.8 DELIVERY, STORAGE, AND HANDLING

A. Deliver products to site under provisions of Division 01. Deliver units to the site in containers with manufacturer's stamp or label affixed.
B. Store/protect products under provisions of Division 01. Protect units against dirt, water, chemical, and mechanical damage. Do not install damaged units - remove from project site.

1.9 WARRANTY

A. Provide general one year (12 months) warranty with five (5) year warranty on compressors under provisions of Division 01. The warranty shall include parts, labor, travel costs, and living expenses incurred by the manufacturer to provide factory authorized service.

PART 2 - PRODUCTS

2.1 PACKAGED ROOFTOP HEATING/COOLING UNIT (GAS/ELECTRIC 3 TO 6 TONS)

A. General:

1. Outdoor rooftop mounted, electrically controlled heating and cooling unit utilizing a reciprocating compressor for cooling duty and gas combustion for heating duty. Unit shall discharge supply air downward or horizontally as shown on contract drawings.
2. Unit shall be rated in accordance with ARI Standards 210240 and 270. Designed in accordance with UL Standard 465.
3. Unit shall be designed to conform to ANSI/ASHRAE 15.
4. Unit shall be safety certified in accordance with U.L standard UL 1995 and ANSI Z21.47 Standards and CSA or CGA certified as a total package.
5. Roof curb shall be designed to conform to NRCA Standards.
6. Insulation and adhesive shall meet NFPA 90A requirements for flame spread and smoke generation.

B. Equipment (Standard):

1. General:

a. Factory assembled, single piece heating and cooling unit. Contained within the unit enclosure shall be all factory wiring, piping, controls, refrigerant charge (R-22) and special features required prior to field start-up.

2. Unit Cabinet:

a. Unit cabinet shall be constructed of a minimum 18 gage G90 galvanized steel, bonderized and coated with an electrostatically applied powder coat finish on all externally exposed surfaces.
b. Indoor blower compartment interior cabinet surfaces shall be insulated with a minimum 1/2" thick, flexible glass fiber insulation, coated on the air side. Aluminum foil faced glass fiber insulation shall be used in the furnace compartment.
c. Cabinet panels shall have hinged access doors for servicing.
d. Filters will be accessible through a hinged access door, and will require no panel or screw removal.
e. Unit shall be provided with roof level lifting lugs.

f. Unit shall have an external connection for field mounted condensate trap.
g. Unit shall have a stainless steel condensate drain pan.

3. Fans:

a. Indoor blower (evaporator fan):

1) Fan shall be belt driven as shown on the equipment drawings. Belt drive shall include an adjustable pitch motor pulley.
2) Fan wheel shall be airfoil blade plenum style.
3) Bearings shall be sealed, permanently lubricated ball bearing type for longer life and lower maintenance.

b. Indoor blower shall be made from aluminum and shall be dynamically balanced.
c. Outdoor (condenser) fan shall be of the direct driven propeller type and shall discharge air vertically upward.
d. Outdoor fan shall have aluminum blades riveted to corrosion resistant steel spiders and dynamically balanced.
e. Induced draft blower shall be of the direct driven, single inlet, forward curved centrifugal type, made from steel with a corrosion resistant finish and dynamically balanced.

4. Compressor:

a. Fully hermetic type, internally protected.
b. Factory rubber shock mounted and internally spring mounted for vibration isolation.
c. Equipped with a factory installed crankcase heater as required to minimize liquid refrigerant accumulation in compressor during shutdown and prevent refrigerant dilution of oil.

5. Coils:

a. Evaporator and condenser coils shall have aluminum plate fins mechanically bonded to seamless copper tubes with all joints brazed.
b. Tube sheet openings shall be belled to prevent tube wear.
c. Evaporator coil shall be of the interlaced design, degreased at the factory.

6. Heating Section:

a. Induced draft combustion type with energy saving direct spark ignition system and redundant main gas valve.
b. The heat exchanger shall be of the tubular section type constructed of a minimum of 16 gauge steel with a minimum 15 year non prorated warranty.
c. Burners shall be of the high-turndown type constructed of aluminum coated steel.
d. All gas piping shall enter the unit cabinet at a single location.

7. Refrigerant Components: Refrigerant circuit components shall include:

a. Thermostatic expansion valve.
b. Filter drier.
c. Service gauge connections on suction, discharge and liquid lines.
d. Refrigerant sight glasses
e. Compressor isolation valves
f. Manual reset high pressure and automatic reset low pressure switches

8. Filter Sections:

a. Standard filter section shall consist of factory installed low velocity, disposable 4" thick glass fiber filters of commercially available sizes.

b. Filter face velocity shall not exceed 320 fpm at nominal airflows.
c. Provide with factory installed Dwyer magnehelic gage
d. Provide with factory installed clogged filter switch

9. Controls and Safeties:

a. Unit Controls: Unit shall be complete with self contained low voltage control circuit protected by a manually resetable circuit breaker.
b. Safeties:

1) Unit shall incorporate standard off the shelf components to perform the following functions:

I. Automatic reset low pressure switch
II. Manual rest high pressure switch

2) Heating section shall be provided with the following minimum protections:

I. High temperature limit switch.
II. Induced draft motor air flow proving switch.
III. Flame rollout switch (manual reset).
IV. Flame proving controls.

10. Operating Characteristics:

a. Unit shall be capable of starting and running at 115° F ambient outdoor temperature per maximum load criteria of ARI Standard 210/240.
b. Compressor with standard controls shall be capable of operation down to 62°F-65° F ambient outdoor temperature.
c. Unit provided with fan time delay of 55 seconds to prevent cold air delivery before heat exchanger warms up.

11. Electrical Requirements: All unit power wiring shall enter unit cabinet at a single factory predrilled location.
12. Motors:

a. Compressor motors shall be cooled by suction gas passing through motor windings and shall have line break thermal and current overload protection.
b. Indoor blower motor shall have permanently lubricated bearings
c. Outdoor totally enclosed motor shall have permanently lubricated bearings, and inherent automatic reset thermal overload protection.
d. Induced draft motor shall have permanently lubricated sealed bearings and inherent automatic reset thermal overload protection.

C. Special Features and Options:

1. Provide the following options with units.

a. Roof Curb:

1) Formed galvanized steel with wood nailer strip and capable of supporting entire unit weight.

b. Integrated Economizer:

1) Integrated type capable of simultaneous economizer and compressor operation.
2) Includes all hardware and controls to provide cooling with outside air.
3) Equipped with airfoil blade low leakage type damper.
4) Capable of introducing up to 100% outside air.
5) Equipped with a power exhaust fan with modulating relief damper.

c. Optional Compressor Cycle Delay:

1) Compressor shall be prevented from restarting for a minimum of 5 minutes after shutdown.

d. Factory Mounted DDC Controls

1) Mount and wire DDC controls components provided by Siemens Controls.
2) Incorporate DDC components into unit color coded wiring diagram
3) Bring all interconnecting wiring to a labeled terminal strip for field connection to indoor control panel and other field mounted components.
4) Use color coded wiring

D. Manufacturer: AAON Model RN & RQ Series, McQuay, or York.

2.2 SPRING ISOLATING ROOF CURB

A. Curb mounted rooftop packaged air conditioning air handlers shall be flexibly ducted, provided with double arch EPDM Expansion Joints, and electrical lines with flexible conduits. The units shall be supported by a spring isolation curb, the lower member of which is a rigid steel tube or a specially formed steel section containing adjustable and removable steel springs that support the upper floating section. The upper frame must provide continuous support for the equipment and must remain captive when resiliently resisting wind and seismic forces. All directional neoprene snubber bushings must be a minimum of 1/2" thick. Steel springs shall rest on 1/4" neoprene acoustical pads. Minimum spring deflection shall be 1 1/2". Hardware must be cadmium or zinc electroplated and the springs similarly plated or provided with an approved rust resistant finish.
B. The curb's waterproofing shall consist of a continuous galvanized flexible counter flashing nailed over the lower curb's waterproofing and joined at the corners by EPDM bellows. All spring locations shall have access ports with removable waterproof covers.
C. The floating member of the roof curb shall have perimeter angle and cross members to support two layers of 5/8" waterproof sheetrock laid on with staggered joints. Sheetrock must surround ducts to provide a continuous sound break. This acoustical barrier shall be caulked to minimize sound transmission. Where the mechanical arrangement makes attachment to the floating member unfeasible, the barrier shall be attached at the highest practical elevation of the fixed curb with provision for 1" thick closed cell neoprene flexible seals around the ductwork. A four inch layer of 1.5 density fiberglass shall cover the entire solid roof surface under the unit. Ductwork shall be lined with sound absorbent material.
D. Curbs shall be Mason Industries Type RSC-dB or approved equal.

PART 3 - EXECUTION

3.1 EXAMINATION

A. Verify that mounting surface, e.g. roof, is ready to receive work.
B. Verify that proper power supply is available.

3.2 INSTALLATION

A. Install in accordance with manufacturer's instructions.
B. Provide layout drawings of units, locations and power requirements to electrical installer.
C. Install minimum 30% efficiency air filters in unit during installation phase. Do not operate the unit without filters in place.
D. Mount rooftop unit on factory built roof mounting frame. Install roof mounting frame level.
E. Install 3" flexible duct connection at inlets and outlets of units.

F. Install condensate drain piping and traps in accordance with manufacturer's instructions and as shown on the Drawings.
G. Control installers shall install thermostat and all wiring associated with control signals into the units.
H. Electrical installer shall install all line voltage power wiring and conduit. Coordinate with Division 26 work.
I. Install a new set of filters prior to final air balance and substantial completion.

3.3 MANUFACTURER'S START-UP SERVICES

A. The manufacturer shall provide start-up service in the form of a factory trained service technician. The service technician shall verify correct installation, verify unit mounting, verify fan rotation, verify spring isolator adjustments, verify control wiring, verify power wiring, start-up the fans, and check for proper operation. The service technician shall provide final adjustments to meet the specified performance requirements. Fully staffed parts and service personnel shall be within four hours travel from the job site.

END OF SECTION

SECTION 23 81 45 - SPLIT HEAT PUMP UNITS

PART 1 - GENERAL

1.1 APPLICABLE REQUIREMENTS

A. All work to be furnished and installed under this section shall comply with all the requirements of General Conditions, Supplemental Conditions, Division 01 - General Requirements, Section 230500 - Basic Materials and Methods, and other Sections in Division 23 specified herein.

1.2 SCOPE

A. All work to be furnished and installed under this Section shall comply with all the requirements of Division 01, and shall include, but not necessarily be limited to, the following:

1. Split heat pump unit
2. Controls and control connections
3. Electrical power connections

1.3 RELATED WORK SPECIFIED ELSEWHERE

A. Section 230500: Basic Materials and Methods

B. Section 230593: Testing, Adjusting and Balancing

C. Section 230700: Mechanical Insulation

D. Section 230900: Controls and Instrumentation

E. Section 232300: Refrigerant Piping Systems

F. Section 233113: Air Distribution

G. Division 26: Electrical

1.4 QUALITY ASSURANCE

A. Manufacturer's Qualifications: Provide packaged units that are the standard product of an equipment manufacturer regularly engaged in the production of such units who issues complete catalog information on such products. Units shall not be fabricated by the Contractor.

B. Codes and Standards: Provide air handling units conforming to the requirements of the latest addition of the following:

1. Air Movement and Control Association (AMCA):
   a. 99Standards Handbook
   b. 210Laboratory Methods of Testing Fans for Rating [Unit shall bear AMCA Certified Rating Seal]
   c. 300Reverberant Room Method for Sound Testing of Fans [Unit shall bear AMCA Certified Rating Seal]
   d. 301Methods for Calculating Fan Sound Ratings from Laboratory Test Data

e. 500Test Method for Louvers, Dampers, and Shutters

2. American National Standards Institute (ANSI):
   a. 9Load Ratings and Fatigue Life for Ball Bearings
   b. 11Load Ratings and Fatigue Life for Roller Bearings
   c. 900Test Performance of Air Filter Units
3. Air-Conditioning and Refrigeration Institute (ARI):
   a. 240Unitary Air-Source Heat Pump Equipment
   b. 270Sound Rating of Outdoor Unitary Equipment
4. American Society of Heating, Refrigerating and Air-Conditioning Engineers (ASHRAE):
   a. 15Safety Code for Mechanical Refrigeration
5. National Electrical Manufacturers Association (NEMA): Except for motors, provide electrical components required as part of air handling units, which comply with NEMA Standards.
6. National Fire Protection Association (NFPA): Provide unit internal insulation having flame spread rating not higher than 25 and smoke developed rating not higher than 50:
   a. 70National electrical Code
   b. 90AStandard for the Installation of Air Conditioning and Ventilating Systems
   c. 90BStandard for the Installation of Warm Air Heating and Air Conditioning Systems
7. Sheet Metal and Air Conditioning Contractors' National Association, Inc. (SMACNA): Comply with applicable SMACNA standards including "HVAC Duct Construction Standards - Metal and Flexible."
8. Underwriters Laboratories, Inc. (UL): Except for motors, provide electrical components required as part of units, which have been listed and labeled by UL.

1.5 SUBMITTALS

A. Product Data: Submit manufacturer's technical product data for systems with air handler units, evaporator coils, and outdoor condensing units showing dimensions, weights, capacities, ratings, fan performance with operating point clearly indicated, motor electrical characteristics, finishes of materials, installation instructions, sound and vibration test report, and bearing life calculations.

B. Maintenance Data: Submit maintenance instructions, including instructions for lubrication, filter replacement, motor and drive replacement, and spare parts lists. Include this data, product data, shop drawings, and wiring diagrams in operating and maintenance manuals; in accordance with requirements of Division 01.

1.6 ENVIRONMENTAL REQUIREMENTS

A. Do not operate units for any purpose, temporary or permanent, until ductwork is clean, filters are in place, bearings lubricated, and fan has been test run under observation.

1.7 DELIVERY, STORAGE, AND HANDLING

A. Deliver products to site under provisions of Division 01. Deliver units to the site in containers with manufacturer's stamp or label affixed.

B. Store/protect products under provisions of Division 01. Protect units against dirt, water, chemical, and mechanical damage. Do not install damaged units - remove from project site.

1.8 WARRANTY

A. Provide general one year (12 months) warranty with five (5) year warranty on compressors under provisions of Division 01. The warranty shall include parts, labor, travel costs, and living expenses incurred by the manufacturer to provide factory authorized service.

PART 2 - PRODUCTS

2.1 SPLIT SYSTEM HEAT PUMP WITH INDOOR FAN COIL

A. Acceptable Manufacturers: Carrier, Trane, York or approved equal.

B. Indoor Fan Coil Unit

1. General:
   a. Factory fabricated fan coil units of the size, type configuration and capacity as scheduled on the drawings. Units shall be self-contained, factory assembled and pre-wired with condensate pump designed to operate with a two speed high efficiency heat pump.
   b. All pressure drops, horsepowers and dimensions shown are maximum allowable. All capacities shown are minimum allowable. All units must have AMCA certified performance data for fans tested in the unit casings. Bare fan certification without casing is not acceptable.
   c. Manufacturers unable to meet this criteria will only be considered as an alternate to specified and as a deduct to base bid. Manufacturers listed by name does not imply that their standard construction meets the specifications nor that they are approved. All manufacturers are required to meet all details of this specification without exception.
2. Unit Casing
   a. Unit shall be enameled, galvanized steel with minimum 1/2" 1.5 LB internal insulation. Insulation shall be attached with adhesive with all exposed edges coated to prevent erosion. All exposed metal inside and out shall be finished with at least one coat of gray enamel.
3. Fan Assembly
   a. Direct-driven, double-width fan wheels shall have forward-curved blades, and be statically and dynamically balanced, with scrolls and fans constructed of galvanized steel.
   b. Rotating assembly shall provide a rigid support for motor and fan assembly. Assembly shall be accessible and entire assembly shall be removable for maintenance.
   c. Motor shall be 3 speed permanent split capacitor type with sleeve type bearings and oversized oil reservoirs.
4. Coils
   a. Coils shall be ARI certified and of the same manufacturer as the unit to insure proper fit and quality. All coil casings shall be galvanized steel minimum or stainless steel. Copper tubes shall be a minimum thickness of 0.020 and return bends of minimum 0.035. Headers shall be non-ferrous seamless copper. Aluminum fins shall have a minimum thickness of 0.0080 and tubes shall be mechanically expanded into fin collars to provide permanent mechanical bond. No exposed copper shall show between fins.
   b. Coils shall be galvanized steel coated with closed cell fire retardant foam insulation.
5. Filter Section
   a. Filters shall be on inch thick pleated filter. Filter velocity shall be less than 500 FPM.

6. Unit Suspension
   a. For horizontally suspended units manufacturer to provide factory welded mounting clips for suspension of units. Clips to be capable of accepting 1/2" rod or isolators. Weights shown on plans are maximum allowable operating weights including water in coils.
7. Resistance Backup: Provide units with electric resistance backup heating capability. Coils to be of helix wound elements with limit controls and automatic reset.
8. Provide return air cabinet as specified on Drawings. Cabinet shall be constructed of heavy gage steel with baked enamel finish.
   a. Dampers: Outside air damper shall fail to closed position on shutdown.
   b. Damper Gaskets: Provide tight fitting dampers with edge gaskets.
   c. Damper Operator: 24 volt operation.
   d. Mixed Air Controls: Provide economizer controls for all units over 2000 cfm or 49,000 btu nominal capacity. Maintain selected supply air temperature and return dampers to minimum position when ambient air temperature exceeds return air temperature.
9. Thermostats
   a. Electronic thermostat with subbase. Seven-day programming with minimum of 2 occupied/unoccupied periods per day. Individual temperature setpoints for heat and cool. Automatic heat/cool changeover. Intelligent recovery to automatically optimize start time depending on building load and setpoints. Locking setpoints and schedules to eliminate tampering. Subbase shall have a fan operation switch (On/Auto) and a conditioning switch (Auto/Cool/Off/Heat). Honeywell #T7300 thermostat and subbase series designed for use with heat pump, or approved equal.

C. Outdoor Condensing Unit:

1. General: Provide remote outdoor heat pump compressor units consisting of hermetic compressor with overload protection, direct drive condenser fan, aluminum fin/seamless copper tube coil, strainer, high and low pressure switches, accumulator, and thermostatic expansion valve.
2. Unit Cabinet: Galvanized steel, bonderized, and coated with powder coat paint.
3. Condenser Fans: Direct drive propeller type, discharging upward. Motors to be totally enclosed, single phase, with Class B insulation and permanently lubricated bearings. Motor to provide multispeed operation and enhanced low-speed efficiency and reduced noise. Fan blades to be statically and dynamically balanced. Condenser fan openings to be equipped with PVC-coated steel wire safety guards.
4. Coil: Aluminum fins mechanically bonded to copper tubes.
5. Refrigerant Components: Liquid tube shutoff valve with sweat connection, suction tube shutoff valves with sweat connection, R-410a refrigerant, accumulator, and reversing valve. An internal pressure relief valve to provide high-pressure protection to the refrigerant system.
6. Compressor: Hermetically sealed two-speed compressor mounted on rubber mountings. Protection to include internal PTC-type overloads. An internal pressure relief valve to provide high-pressure protection to the refrigerant system. Provide external service valves for the refrigerant circuit.
7. Controls: Provide. Provide an electronic anti-short cycle control., a malfunction output signal to the indoor thermostat and an outdoor thermostat for auxiliary heat staging. Provide a compressor quick start kit. Provide auto-reset high and low-pressure switches to continuously monitor system operation and mechanical and electrical interlocks between the low and high-speed contactors to eliminate the potential of compressor motor burnout due to contactor malfunction

D. Efficiency: SEER of combined fan-coil and outdoor unit to be a minimum of 18 with an HSPF of 8.8.

2.2 SPLIT SYSTEM HEAT PUMP WITH WALL OR CEILING HUNG DUCTLESS INDOOR UNIT

A. Acceptable Manufacturers: Carrier, Mitsubishi, Sanyo or approved equal.

B. Indoor Fan Coil Unit

1. General:
   a. Factory fabricated wall or ceiling mounted fan coil units designed for ductless application of the size, type configuration and capacity as scheduled on the drawings. Units shall be self-contained, factory assembled and pre-wired.
   b. All pressure drops, horsepowers and dimensions shown are maximum allowable. All capacities shown are minimum allowable. All units must have AMCA certified performance data for fans tested in the unit casings. Bare fan certification without casing is not acceptable.
   c. Manufacturers unable to meet this criteria will only be considered as an alternate to specified and as a deduct to base bid. Manufacturers listed by name does not imply that their standard construction meets the specifications nor that they are approved. All manufacturers are required to meet all details of this specification without exception.
2. Unit Casing
   a. High Wall Unit: Cabinet shall be fully insulated with polystyrene inlet and discharge grilles.
   b. Ceiling Suspended Unit: Cabinet shall be zinc-coated bonderized steel finished with baked enamel paint. Inlet grilles shall be high-impact polystyrene.
3. Fan Assembly
   a. High Wall Unit: Tangential direct-drive blower with intake at the upper front face of the unit and discharge at the bottom front. Automatic, motor-driven vertical air sweep shall be standard.
   b. Fan shall be centrifugal blower with air intake in the bottom rear of the unit and discharge in the front.
4. Motors:
   a. Motors shall be open drip-proof, permanently lubricated ball bearing with inherent overload protection. Fan motor to be 3-speed.
5. Coils
   a. Coils shall be copper tube with ARI certified and of the same manufacturer as the unit to insure proper fit and quality mechanical bond. No exposed copper shall show between fins.
   b. Coils drip pan shall be galvanized steel coated with closed cell fire retardant foam insulation. A secondary drip pan shall be included under the coil header.
6. Filter Section
   a. Filters shall be factory supplied cleanable filter.
7. Controls: Microprocessor based with the following functions.
   a. Automatic restart after power failure.
   b. Internal temperature sensing controls shall sense return air temperature.
   c. Indoor coil freeze protection.
   d. Dehumidification mode shall be provided to increase latent removal capability by modulating fan speed and set point temperature.
   e. Fan only operation shall be provided to permit room circulation when no cooling is required.
   f. Fan speed control shall be user-selectable: high, medium, low, or microprocessor automatic operation during operating periods.
   g. Compressor time delay to limit cycling.
8. Special features:
   a. Provide an internal condensate pump with interlock to unit operation in the event of malfunction.
   b. Provide external electronic programmable thermostat for ceiling mounted units.

C. Outdoor Condensing Unit:

1. General: Provide remote outdoor heat pump compressor units consisting of hermetic compressor with overload protection, direct drive condenser fan, aluminum fin/seamless copper tube coil, strainer, high and low pressure switches, accumulator, and thermostatic expansion valve..
2. Unit Cabinet: Galvanized steel, bonderized, and coated with powder coat paint.
3. Condenser Fans: Direct drive propeller type, discharging upward. Motors to be totally enclosed, single phase, with Class B insulation and permanently lubricated bearings. Condenser fan openings to be equipped with PVC-coated steel wire safety guards.
4. Coil: Aluminum fins mechanically bonded to copper tubes.
5. Refrigerant Components: Liquid tube shutoff valve with sweat connection, suction tube shutoff valves with sweat connection, R-410a refrigerant, accumulator, and reversing valve. An internal pressure relief valve to provide high-pressure protection to the refrigerant system.
6. Compressor: Hermetically sealed two-speed compressor mounted on rubber mountings. Protection to include internal PTC-type overloads. An internal pressure relief valve to provide high-pressure protection to the refrigerant system. Provide external service valves for the refrigerant circuit.
7. Controls: Provide an electronic anti-short cycle control, a malfunction output signal to the indoor thermostat and an outdoor thermostat for auxiliary heat staging. Provide a compressor quick start kit. Provide auto-reset high and low-pressure switches to continuously monitor system operation and mechanical and electrical interlocks between the low and high-speed contactors to eliminate the potential of compressor motor burnout due to contactor malfunction high condensing temperature protection. Systems diagnostics with matching fan coil.

D. Efficiency: SEER of combined fan-coil and outdoor unit to be a minimum of 15 with an HSPF of 6.8.

PART 3 - EXECUTION

3.1 EXAMINATION

A. Verify that mounting surfaces are ready to receive work.

B. Verify that proper power supply is available.

3.2 INSTALLATION

A. Install in accordance with manufacturer's instructions.

B. Provide layout drawings of units, locations and power requirements to electrical installer.

C. Install air filters in unit during installation phase. Do not operate the unit without filters in place.

D. In the case of suspended units, mount the fan coil units on springs or from spring hangers as required and as shown on Drawings. Provide Mason #DNHS combination isolator hangers to fully support horizontal units hung from building framing.

E. Provide 4" high concrete pad extending 6" beyond edge of condensing unit on all sides. Attach condensing unit to concrete pad with concrete anchors and angle brackets.

F. Install 2" flexible duct connection at inlets and outlets of ducted units..

G. Install condensate drain piping and traps in accordance with manufacturer's instructions and as shown on the Drawings.

H. Install copper refrigerant piping and insulate lines.

I. Install thermostat and all wiring associated with control signals between air handling unit and condensing unit. Conceal low voltage wiring in building structure, or inside the refrigerant pipe insulation, or in conduit.

J. Electrical installer shall install all line voltage power wiring and conduit. Coordinate with Division 26 work.

K. Install a new set of filters prior to final air balance and substantial completion.

3.3 MANUFACTURER'S START-UP SERVICES

A. The manufacturer shall provide start-up service in the form of a factory trained service technician. The service technician shall verify correct installation, verify unit mounting, verify fan rotation, verify spring isolator adjustments, verify control wiring, verify power wiring, start-up the fans, and check for proper operation. The service technician shall provide final adjustments to meet the specified performance requirements. Fully staffed parts and service personnel shall be within four hours travel from the job site.

END OF SECTION

SECTION 26 09 23 – MODULAR DIMMING CONTROLS

PART 1 - GENERAL

1.1 SUMMARY

A. Section Includes:

1. Central dimming control systems.

B. Related Sections:

1. Section 26 27 26 - Wiring Devices

1.2 REFERENCES

A. American National Standards Institute/Institute of Electrical and Electronic Engineers (ANSI/IEEE)

1. C62.41-1991 – Recommended Practice for Surge Voltages in Low-Voltage AC Power Circuits.

B. ASTM International (ASTM)

1. D4674 -02a Standard Test Method for Accelerated Testing for Color Stability of Plastics Exposed to Indoor Fluorescent Lighting and Window-Filtered Daylight.

C. Canadian Standards Association (CSA)

1. CSA C22.2 # 14 Industrial Control Equipment
2. CSA C22.2 # 184 Solid-State Lighting Controls
3. CSA C22.2 # 156 Solid-State Speed Controls

D. International Electro-technical Commission

1. (IEC) 801-2 Electrostatic Discharge Testing Standard.
2. IEC/EN 60669-2-1 Switches for household and similar fixed electrical installations - electronic switches.

E. International Organization for Standardization (ISO)

1. 9001:2000 – Quality Management Systems.

F. F. National Electrical Manufacturers Association (NEMA)

1. WD1 (R2005) - General Color Requirements for Wiring Devices.

G. G. Norma Official Mexicana (NOM)

1. NOM-003-SCFI Productos eléctricos - Especificaciones de seguridad (Electrical products - Safety Specifications)

H. H. Underwriters Laboratories, Inc. (UL):

1. 489 (2002) - Molded-Case Circuit Breakers, Molded-Case Switches, and Circuit-Breaker Enclosures.
2. 508 (1999) - Standard for Industrial Control Equipment.
3. 1472 (1996) - Solid-State Dimming Controls.
4. 924 (2003) - Emergency Lighting and Power Equipment.

1.3 SYSTEM DESCRIPTION

A. Modular dimming control: Factory assembled dimming control, interfaces, and modules. Low voltage wall stations, control interfaces, and sensors.

1.4 SUBMITTALS

A. Submit under provisions of Division 1.

B. Specification Conformance Document: Indicate whether the submitted equipment:

1. Meets specification exactly as stated.
2. Meets specification via an alternate means and indicate the specific methodology used.

C. Shop Drawings:

1. Load schedule indicating actual connected load, load type, and voltage per circuit, circuits and their respective control zones, circuits that are on emergency, and capacity, phase, and corresponding circuit numbers.
2. Schematic of system.

D. Product Data: Catalog cut sheets with performance specifications demonstrating compliance with specified requirements.

1.5 CLOSEOUT SUBMITTALS

A. Provide Operation and Maintenance Manuals:

1. Including:

a. Warranty Information
b. System Start-up Information
c. Installation Guide
d. Set-up and Programming Guide

2. Electronic format to be available on Lighting Control System manufacturer website.

1.6 QUALITY ASSURANCE

A. Manufacturer: Minimum 10 years experience in manufacture of architectural lighting controls.

B. Manufacturer's Quality System: Registered to ISO 9001:2000 Quality Standard, including in-house engineering for product design activities.

C. Central dimming control system:

1. Listed by ~~CSA, NOM,~~ UL specifically for the required loads. Provide evidence of compliance upon request.

1.7 PROJECT CONDITIONS

A. Do not install equipment until following conditions can be maintained in spaces to receive equipment:

1. Ambient temperature: 0° to 40° C (32° to 104° F).
2. Relative humidity: Maximum 90 percent, non-condensing.
3. Lighting control system must be protected from dust during installation.

1.8 WARRANTY

A. Provide manufacturer's Enhanced 8 Year Limited Warranty:

1. 8-year limited parts warranty for the replacement of defective lighting components from the date of system startup completion.
2. 2-year Silver Level Support and Maintenance Plan that covers 100% parts and labor from the date of the system startup completion.

B. Provide manufacturer's full 4 year warranty covering 100% parts and 100% labor from the date of system startup completion.

1. Silver Level Support and Maintenance Plan: includes 100% parts and labor coverage, 24/7 telephone technical support, and can be renewed annually.
2. Gold Level Support and Maintenance Plan: includes 100% parts and labor coverage, 24/7 telephone technical support, annual renewal option, 72-hour on-site response time, an annual scheduled maintenance visit and an upgrade of initial 2-year Silver Level Support and Maintenance Plan to Gold Level Support and Maintenance Plan.
3. Platinum Level Support and Maintenance Plan: includes 100% parts and labor coverage, 24/7 telephone technical support, annual renewal option, 24-hour on-site response time, an annual scheduled maintenance visit and an upgrade of initial 2-year Silver Level Support and Maintenance Plan to Platinum Level Support and Maintenance Plan.

1.9 MAINTENANCE

A. Make ordering of new equipment for expansions, replacements, and spare parts available to end user.

B. Make new replacement parts available for minimum of ten years from date of manufacture.

C. Provide factory direct technical support hotline 24 hours per day, 7 days per week.

1.10 COMMISSIONING

A. Support and Maintenance Plan - Gold Level

1. Description – All Silver Benefits, Plus:

a. 72-hour response time – a Lutron services company representative will be on-site within 72 hours of the customer's call to assess the system and begin repairs.
b. Annual scheduled maintenance visit – a Lutron services company representative will visit the site once a year on a mutually agreed upon date between Lutron and the end-user. According to the site's requests and needs, the Lutron representative may complete the following tasks:

1) Train facility staff on operation and maintenance of the system.
2) Update staff on utilization of features and new capabilities.
3) Make minor programming changes as requested.
4) Perform a full system check and preventative maintenance to ensure that the system is working properly.
5) Provide a system status report detailing the tasks accomplished on the visit date, important findings, and any recommendations to increase system efficiency and user satisfaction.
6) Compile a list of spare parts to consider for site, upon request.

PART 2 - PRODUCTS

2.1 MANUFACTURERS

A. Basis of design product: Lutron GRAFIK Eye QS & Energi Savr Node or subject to compliance and prior approval with specified requirements of this section:

B. Substitutions: Under provisions of Division 1.

1. All proposed substitutions (clearly delineated as such) must be submitted in writing for approval by the design professional a minimum of 10 working days prior to the bid date and must be made available to all bidders.
2. Proposed substitutes must be accompanied by a review of the specification noting compliance on a line-by-line basis.
3. By using pre-approved substitutions, the contractor accepts responsibility and associated costs for all required modifications to circuitry, devices, and wiring.

4. Provide complete engineered shop drawings (including power wiring) with deviations for the original design highlighted in an alternate color to the engineer for review and approval prior to rough-in.

2.2 GENERAL

A. Provide system hardware that is designed, tested, manufactured, and warranted by a single manufacturer.

B. Architectural Lighting Controls: Ten-year operational life while operating continually at any temperature in an ambient temperature range of 0° C (32°F) to 40° C (104°F) and 90 percent non-condensing relative humidity.

C. Designed and tested to withstand electrostatic discharges up to 15,000 V without impairment per IEC 801-2.

D. Wireless Devices shall:

1. Have addresses automatically assigned to them.
2. Receive signals from other wireless devices and provide feedback to user.
3. Work in conjunction with wireless occupancy sensors, wireless vacancy sensors, and wireless controllers.
4. Use proprietary Radio Frequency (RF) protocol.
~~C.~~5. Use RF communication in compliance with FCC Part 15.231.

2.3 DIMMING PERFORMANCE REQUIREMENTS

A. Electrolytic capacitors to operate at least 20° C below the component manufacturer's maximum temperature rating when device is under fully-loaded conditions in 40° C (104° F) ambient temperature.

B. Load Handling Thyristors (SCRs and triacs), Field Effect Transistors (FETs), and Isolated Gate Bipolar Transistors (IGBTs): Manufacturer’s maximum current rating minimum two times control’s rated operating current.

C. Capable of withstanding repetitive inrush current of 50 times operating current without impacting lifetime of dimmer.

D. Design and test dimmers to withstand line-side surges without impairment to performance.

1. Withstand surges without impairment of performance when subjected to surges of 6,000 volts, 3,000 amps per ANSI/IEEE C62.41.
2. Other power handling devices: Withstand surges without impairment of performance when subjected to surges of 6,000 volts, 200 amps per ANSI/IEEE C62.41.

E. Utilize air gap off – activated when user selects “off” at any control to disconnect the load from line supply.

F. Possess power failure memory such that if power is interrupted and subsequently returned, lights will automatically return to same levels (dimmed setting, full on, or off) prior to power interruption within 3 seconds.

G. Multiple load type, tested to UL 508 to specifically control incandescent/tungsten, magnetic low voltage, electronic low voltage, neon/cold cathode, fluorescent dimming ballasts, and non-dim loads.

H. Each dimmer to be assigned a load type that will provide a proper dimming curve for the specific light source.

I. Possess ability to have load types assigned per circuit, configured in field.

J. Minimum and maximum light levels user adjustable on circuit-by-circuit basis.

K. Control all light sources in smooth and continuous manor. Dimmers with visible steps are not acceptable.

L. Provide real-time cycle-by-cycle compensation for incoming line voltage variations including changes in RMS voltage (plus or minus 2 percent change in RMS voltage/cycle), frequency shifts (plus or minus 2 Hz change in frequency/second), dynamic harmonics, and line noise. Systems not providing cycle-by-cycle compensation to include external power conditioning equipment to meet these requirements.

M. Systems not providing cycle-by-cycle compensation to include external power conditioning equipment as part of dimming system.

N. Each dimmer to incorporate electronic "soft-start" default at initial turn-on that smoothly ramps lights up to the appropriate levels within 0.5 seconds.

O. Line Voltage Dimmers; Meet following load-specific requirements:

1. Magnetic Low Voltage (MLV) transformer:

a. Contain circuitry designed to control and provide a symmetrical AC waveform to input of magnetic low voltage transformers per UL 1472, Section 5.11.
b. Dimmers using back-to-back SCR construction that could fail open causing DC power to flow into magnetic low voltage load are not acceptable.

2. Electronic Low Voltage (ELV) transformer: Dimmer to operate electronic low voltage transformers via reverse phase control. Alternately, forward phase control dimming may be used if dimming equipment manufacturer has recommended specific ELV transformers being provided.
3. Neon and cold cathode transformers:

a. Magnetic transformers: UL listed for use with normal (low) power factor magnetic transformers. Electronic transformers: Must be supported by the ballast equipment manufacturer for control of specific ballasts being provided.

4. Fluorescent electronic dimming ballast: Refer to Section [16580] for dimming ballast specifications and performance.

P. Direct low-voltage control of digital ballasts (120V, 220/240V, and/or 277V lighting):

1. Electronically link a digital fluorescent lighting ballast to a zone for both dimming and turn on/off.
2. Energy usage and light level status visible to operator on an integral display.
3. Electronically assign occupancy sensors for manual on/auto off and auto on/auto off.
4. Electronically assign daylight sensors to digital ballasts and line voltage dimmers for proportional daylight harvesting.
5. Single integral controller with Class 1 or Class 2 isolated digital output signal conforming to IEC 60929; capable of direct (no-interface) control.

Q. Low Voltage Dimming Interface; Meet following requirements:

1. Coordination between low voltage dimming module and line voltage relay: Capable of being electronically linked to single zone.
2. Single low voltage dimming module; capable of controlling following light sources:

a. 0-10V analog voltage signal.

1) Provide Class 2 isolated 0-10V output signal conforming to IEC 60929.
2) Sink current via IEC 60929.

2.4 POWER INTERFACES

A. Product: PHPM-PA-DV, PHPM-3F-DV, PHPM-SW-DV, NGRX-PB, GRX-FDBI, and/or GRX-TVI. Provide power interfaced required as defined on project drawings.

B. Electrical:

1. Phase independent of control input.
2. Dimmer to meet limited short circuit test as defined in UL 20.

C. Diagnostics and Service: Replacing power interface does not require re-programming of system or processor.

2.5 WALL STATIONS

~~A.~~ Line Voltage Wall Stations:

A.

1. Product: GRAFIK Eye QS
~~1.~~2. Preset lighting control with zone override:

a. Intensity for each zone indicated by means of one illuminated bar graph per zone.
b. Each zone and scene to be field customizable to indicate each zone and scene name.
c. Astronomical time clock and programmer interface:

1) Provide access to:

a) Scene selections.
b) Fade zone to a level.
c) Fine-tuning of preset levels with scene raise/lower.
d) Lock out scenes and zones.
e) Fine-tuning of light levels with individual zone raise/lower.
f) Terminal block for wired infrared signal input.
g) Enable/disable wall station.

d. Light intensity with real time energy savings by digital display.
e. Fade time indicated by digital display for current scene while fading.
f. Incorporate built-in wide angle infrared receiver.
g. For temporary local overrides, individual raise/lower buttons to allow zones to be adjusted without altering scene values stored in memory.

~~2.~~3. Preset shade control with zone override:

a. Preset expandable shade control: Provide up to 3 columns of shade control. See Section [12413 - Window Treatments:]
b. For temporary local overrides, individual raise/lower buttons to allow zones to be adjusted without altering scene values stored in memory.

B. Low Voltage Wall Stations:

1. Product: see Touch QS.
2. Electronics:

a. Use RS485 wiring for low voltage communication.

3. Functionality:

a. Upon button press, LEDs to immediately illuminate.
b. LEDs to reflect the true system status. LEDs to remain illuminated if the button press was properly processed or the LEDs turn off if the button press was not processed.
c. Allow for easy reprogramming without replacing unit.
d. Replacement of units does not require reprogramming.

4. Provide faceplates with concealed mounting hardware.

C. Color:

1. Standard color to be selected.
2. Color variation in same product family: Maximum •E=1, CIE L*a*b color units.
3. Visible parts: Exhibit ultraviolet color stability when tested with multiple actinic light sources as defined in ASTM D4674. Provide proof of testing upon request.

D. Provide faceplates with concealed mounting hardware.

E. Engrave wall stations with appropriate button, zone, and scene engraving descriptions furnished prior to fabrication.

F. Silk-screened borders, logos, and graduations to use graphic process that chemically bonds graphics to faceplate, resistant to removal by scratching and cleaning.

2.6 ENERGI SAVR NODE QS LIGHTING CONTROL MODULE

A. Softswitch Lighting Control Module:

1. Product: QSN-4S16-S
2. Mechanical:

a. Listed to UL 508 (United States) as industrial control equipment. CSA (Canada) certified, or NOM (Mexico) approved as applicable.
b. Delivered and installed as a UL listed factory assembled panel.
c. Panels passively cooled via free-convection, unaided by fans or other means.

3. Surface mounted
4. Switching:

a. Rated life of relay: Minimum 1,000,000 cycles.
b. Load switched in manner that prevents arcing at mechanical contacts when power is applied to and removed from load circuits.
c. Fully rated output continuous duty for inductive, capacitive, and resistive loads.
d. Module to integrate up to 4 individually controlled zones, each with a capacity of up to 16 amps, of high in-rush lighting load (magnetic fluorescent ballast, electronic fluorescent ballast, HID, incandescent, magnetic low-voltage, electronic low-voltage, neon/cold cathode and motor loads).

5. Connection without interface to wired:

a. Occupancy sensors
b. Daylight sensors
c. IR receivers for personal control

6. Connects to Lighting Management Panel via RS485.
7. LED status indicators confirm communication with occupancy sensors, daylight sensors, and IR receivers.
8. Thermal protection reports to Light Management System if module overheats.
9. Contact Closure Input

a. Directly accept contact closure input from a dry contact closure or solid-state output without interface to:

1) Activate scenes
2) Enable or disable timeclock

10. Emergency Contact Closure Input

a. Turn all zones to full output during emergency state via direct contact closure input from UL 924 Listed Emergency Lighting Interface, security system or fire alarm system
b. Allow configurable zone response during emergency state.
c. Disable control operation until emergency signal is cleared.

B. 0-10V Lighting Control Module:

1. Product: QSN-4T16-S
2. Meet the following requirements:
    a. Coordination between low voltage dimming module and line voltage relay: Capable of being electronically linked to single zone.
    b. Single low voltage dimming module; capable of controlling following light sources:
        1) 0-10V analog voltage signal.
            a) Provide Class 2 isolated 0-10V output signal conforming to IEC 60929.
            b) Sink current via IEC 60929.
3. Mechanical:
    a. Listed to UL 508 (United States) as industrial control equipment. CSA (Canada) certified, or NOM (Mexico) approved as applicable.
    b. Delivered and installed as a UL listed factory assembled panel.
    c. Panels passively cooled via free-convection, unaided by fans or other means.
4. Surface mounted
5. Switching:
    a. Rated life of relay: Minimum 1,000,000 cycles.
    b. Load switched in manner that prevents arcing at mechanical contacts when power is applied to and removed from load circuits.
    c. Fully rated output continuous duty for inductive, capacitive, and resistive loads.
    d. Module to integrate up to 4 individually controlled zones, each with a capacity of up to 16 amps, of high in-rush lighting load (magnetic fluorescent ballast, electronic fluorescent ballast, HID, incandescent, magnetic low-voltage, electronic low-voltage, neon/cold cathode and motor loads).
6. Connection without interface to wired:
    a. Occupancy sensors
    b. Daylight sensors
    c. IR receivers for personal control
7. Connects to Lighting Management Panel via RS485.
8. LED status indicators confirm communication with occupancy sensors, daylight sensors, and IR receivers.
9. Thermal protection reports to Light Management System if module overheats.
10. Contact Closure Input
    a. Directly accept contact closure input from a dry contact closure or solid-state output without interface to:
        1) Activate scenes
        2) Enable or disable timeclock
11. Emergency Contact Closure Input
    a. Turn all zones to full output during emergency state via direct contact closure input from UL 924 Listed Emergency Lighting Interface, security system or fire alarm system
    b. Allow configurable zone response during emergency state.
    c. Disable control operation until emergency signal is cleared.

C. EcoSystem Digital Fixture Lighting Control Module

1. Product: QSN-2ECO-PS120
2. Mechanical:

a. Listed to UL 508 (United States) as industrial control equipment. CSA (Canada) certified, or NOM (Mexico) approved as applicable.
b. Delivered and installed as a [UL] [CSA] listed factory assembled panel.
c. Panels passively cooled via free-convection, unaided by fans or other means.

3. Supports one or two independent links of up to 64 ballasts per link.
4. Connect without interface to wired:

a. Occupancy sensors
b. Daylight sensors
c. IR receivers for personal control

5. Connects to Lighting Management Panel via RS485.
6. LED status indicators confirm communication with occupancy sensors, daylight sensors, and IR receivers.
7. Thermal protection reports to Light Management System if module overheats.
8. Contact Closure Input

a. Directly accept contact closure input from a dry contact closure or solid-state output without interface to:

1) Activate afterhours mode
2) Provide basic load shed functionality

9. Emergency Contact Closure Input

a. Turn all zones to full output during emergency state via direct contact closure input from UL 924 Listed Emergency Lighting Interface, security system or fire alarm system
b. Disable control operation until emergency signal is cleared.

10. Programming Connection:

a. Provide Ethernet input for wired connection to wireless router.
~~F.~~b. Provide ability for programming from an iPod touch or IPhone via wireless router.

2.7 LOW VOLTAGE CONTROL INTERFACES

A. Contact Closure Interface:

1. Product: QSE-IO
2. The contact closure input device will accept both momentary and maintained contact closures.
3. The contact closure output device can be configured for maintained or pulsed outputs.

B. Contact Closure Input Interface:

1. Product: QS seeTouch keypads Model QSWS2
~~2.6~~2. The contact closure input device will accept both momentary and maintained contact closures.

~~A.~~C. Ethernet Interfaces; Lutron Model QSE-CI-NWK-E:

1. Provide ability to communicate by means of:

a. TCP/IP over Ethernet to GRAFIK Eye QS system by means of user-supplied PC or digital audiovisual equipment. Control to be located within 300 feet (100 meters) of Ethernet source.
b. RS232 serial communication to GRAFIK Eye QS series system by means of user-supplied PC or digital audiovisual equipment. Control to be located within 50 feet (15 meters) of RS232 source.

2. Provide access to:

a. Scene selections.

b. Fade zone to a level.
c. Set level of shade(s).
d. Fine-tuning of preset levels with scene raise/lower.
e. Lock out scenes and zones.
f. Fine-tuning of light levels with individual zone raise/lower.
g. Fine-tuning of shade levels with individual zone raise/lower.
h. Enable/disable wall station.

3. Provide status monitoring through button feedback and scene-status updates.

~~B. Emergency Lighting Interface; Lutron LUT-ELI~~

~~1. Provides total system listing to UL924 when used with Lutron GRAFIK Eye QS system.~~
~~2. Senses all three phases of building power.~~
~~3. Provides an output to power panels if power on any phase fails.~~
~~4. Accepts a contact closure input from a fire alarm control panel.~~

~~2.7~~2.8 SENSORS

A. Wireless Ceiling Occupancy/Vacancy Sensors

1. Product: LRF2-OCRB-P-WH/LRF2-VCRB-P-WH
2. Wireless Ceiling Sensors shall:

a. Have an operational lifetime of 10 years without the need to replace batteries when installed per manufacturer's instructions.
b. Communicate directly to compatible RF receiving devices through use of a radio frequency communications link.
c. Not require external power packs, power wiring, or communication wiring.
d. Provide a clearly visible method of indication to verify that motion is being detected during testing and that the unit is communicating to compatible RF receiving devices.
e. Have a multiple segmented lens, with internal grooves to eliminate dust and residue build-up.
f. Utilize Infrared as its sensing mechanism coupled with Lutron XCT Technology for sensing fine motions. Signal processing technology detects fine-motion passive infrared (PIR) signals without the need to change the sensor's sensitivity threshold.
g. Have optional, readily accessible, user adjustable controls for timeout, automatic/manual-on, and sensitivity.
h. Have the ability to be placed in test mode to verify correct coverage and operation from the face of the unit.
i. Have a radio frequency range of up to 60' (18.3 m) between sensor and compatible RF receiving device(s).
j. Turn off lighting automatically after reasonable and adjustable time delay once the last person to occupy the space vacates a room or area.
k. Comply with the limits for a Class B device, pursuant to part 15 of the FCC rules.
l. Communicate with up to 10 compatible RF receiving devices.

3. Mounting:

a. Provide surface mounting bracket compatible with drywall, plaster, wood, concrete, compressed fiber ceilings.
b. Provide all necessary mounting hardware and instructions for both temporary and permanent mounting.
c. Provide temporary mounting means to allow user to check proper performance and relocate as needed before permanently mounting sensor. Temporary mounting method shall be designed for easy, damage-free removal.
d. Ceiling-mount wireless occupancy/vacancy sensors using passive infrared technology shall have a customizable mask to block off unwanted viewing areas.

e. Sensor lens shall illuminate during test mode when motion is detected to allow installer to verify coverage prior to permanent mounting.

4. Wireless occupancy/vacancy sensor can be programmed to operate as an occupancy sensor (automatic-on and automatic-off functionality), an occupancy sensor with low light feature (automatic-on when less than 1 fc (10 lux) of ambient light available and automatic-off functionality), or a vacancy sensor (manual-on and automatic-off functionality).
5. A vacancy-only model shall be available to meet California Title 24 Energy Efficiency Standard requirements.

B. Wired Ceiling and Wall Mount Occupancy/Vacancy Sensors

1. Product: LOS-CUS-500-WH/LOS-CUS-1000-WH/LOS-CUS-2000-WH/LOS-CIR-450-WH/LOS-CIR-1500-WH/LOS-CDT-500-WH/LOS-CDT-500R-WH/LOS-CDT-1000-WH/LOS-CDT-1000R-WH/LOS-CDT-2000-WH/LOS-CDT-2000R-WH/LOS-WIR-WH/LOS-WDT-WH/LOS-WDT-R-WH.
2. Sensing mechanism:

a. Dual technology:

1) Utilize multiple segmented lens, with internal grooves to eliminate dust and residue build-up.
2) Utilize an operating frequency of 32kHz or 40kHz that shall be crystal controlled to operate within plus or minus 0.005 percent tolerance.

3. Connect directly to EcoSystem ballast and modules without the need of a power pack or other interface
4. Sensors shall turn off or reduce lighting automatically after reasonable time delay when a room or area is vacated by the last person to occupy the space
5. Sensor shall accommodate all conditions of space utilization and all irregular work hours and habits.
6. Sensors shall be UL listed (as appropriate)
7. Sensors shall be fully adaptive and adjust their sensitivity and timing to ensure optimal lighting control for any use of the space
8. Sensors shall have field adjustable controls for time delay and sensitivity to override any adaptive features.
9. Power failure memory:

a. Controls incorporate non-volatile memory. Should power be interrupted and subsequently restored, settings and learned parameters saved in protected memory shall not be lost.

10. Provide all necessary mounting hardware and instructions.
11. Sensors shall be Class 2 devices.
12. Indicate viewing directions on mounting bracket for all Ceiling mount sensors.
13. Provide customizable mask to block off unwanted viewing areas for all ceiling mounted sensors using infrared technology.
14. Provide swivel mount base for all wall mount sensors.

C. Sensor Power Packs

1. Control wiring between sensors and control units shall be Class 2, 18-24 AWG, stranded U.L. Classified, PVC insulated or TEFLON jacketed cable suitable for use in plenums, where applicable.
2. For ease of mounting, installation and future service, power pack(s) shall be able to mount through a 1/2" knock-out in a standard electrical enclosure and be an integrated, self-contained unit consisting internally of an isolated load switching control relay and a transformer to provide low-voltage power. Transformer shall provide power to a minimum of three (3) sensors.
3. Power pack shall be plenum rated

D. Infrared Receivers

1. Product: EC-IR-WH
2. Use Class 2 wiring for low voltage communication
3. Can be replaced without reprogramming
4. 360 degree reception of wireless infrared remote controls
5. Immediate local LED response upon reception of hand held transmitter communication
6. Constructed with plastic meeting UL94 HB
7. Mountable on lighting fixtures or recessed acoustical ceiling tiles
8. Constructed via sonic welding
9. Color:

a. Match NEMA WD1, Section 2 White
b. Color variation in same product family: Maximum ΔE=1, CIE L*a*b color units
c. Visible parts: Exhibit ultraviolet color stability when tested with multiple actinic light sources as defined in ASTM D4674. Provide proof of testing upon request.

E. Interior Daylight Sensors

1. Wireless Daylight Sensor:

a. Product: LRF2-DCRB-WH

1) Open-loop basis for daylight sensor control scheme
2) Stable output over temperature from 0 degrees to 40 degrees C
3) Partially shielded for accurate detection of available daylight to prevent fixture lighting and horizontal light component from skewing sensor detection
4) Provide linear response from 0 to 10,000 foot-candles

b. Wireless Daylight Sensors shall:

1) Have an operational lifetime of 10 years without the need to replace batteries when installed per manufacturer's instructions.
2) Communicate directly to compatible RF receiving devices through use of a radio frequency communications link.
3) Not require external power packs, power wiring, or communication wiring.
4) Have the ability to be placed in test mode to verify correct operation from the face of the unit.
5) Have a radio frequency range of up to 18.3 meters (60 feet) between sensor and compatible RF receiving device(s).
6) Comply with the limits for a Class B device, pursuant to part 15 of the FCC rules.
7) Color:

a) Match NEMA WD1, Section 2 White

c. Mounting:

1) Provide surface mounting bracket compatible with drywall, plaster, wood, concrete, compressed fiber ceilings.
2) Provide all necessary mounting hardware and instructions for both temporary and permanent mounting.
3) Provide temporary mounting means to allow user to check proper performance and relocate as needed before permanently mounting sensor. Temporary mounting method shall be designed for easy, damage-free removal.

d. Shall meet California Title 24 Energy Efficiency Standard requirements.

F. Exterior Daylight Sensors

1. Calibrated with independent turn-on and turn-off thresholds; minimum 2 foot-candles difference between the turn-on and turn-off thresholds.
2. Enclosed in weatherproof housing with shading and lens protection visor.

~~A. Infrared Partition Sensor: Provide contact closure based on status of sensor.~~

2.9 ACCESSORIES

A. Emergency Lighting Interface; Lutron LUT-ELI

1. Provides total system listing to UL924 when used with Lutron GRAFIK Eye QS system.
2. Senses all three phases of building power.
3. Provides an output to power panels if power on any phase fails.
~~2.8~~4. Accepts a contact closure input from a fire alarm control panel.

~~A.~~B. Tamper Proof Covers:

1. Locking covers for preset control units and wall stations: Reversible to allow lock to be located on either side of control.
2. Compatible with IR controls.
3. Does not reduce specified IR range by more than 50 percent of its original specification.

~~B.~~C. Infrared Transmitters:

1. Provide wireless remote control capable of recalling preset light level scenes plus “off” and of fine-tuning light levels with master raise/lower.
2. Provide wireless remote control capable of recalling preset shade levels for three presets plus “open” and “close” with fine-tuning shade levels with master raise/lower.
3. Designed for use in conjunction with compatible infrared receiver and lighting control; dependent on that receiver, not transmitter.
4. Operate up to 50 feet (15 meters) within line-of-sight to that receiver.
5. “Learnable” by other variable frequency remote controls.

~~2.9~~2.10 SOURCE QUALITY CONTROL

A. Perform full-function testing on completed assemblies at end of line. Statistical sampling is not acceptable.

PART 3 - EXECUTION

3.1 INSTALLATION

A. Install equipment in accordance with manufacturer’s installation instructions.

B. Provide complete installation of system in accordance with Contract Documents.

C. Define each dimmer's load type, shade settings, and set control functions.

D. Provide equipment at locations and in quantities indicated on Drawings. Provide any additional equipment required to provide control intent.

~~D.~~E. Ensure that daylight sensor placement minimizes sensors view of electric light sources; ceiling mounted and fixture-mounted daylight sensors shall not have direct view of luminaries.

3.2 STARTUP AND PROGRAMMING

A. Provide factory-certified field service engineer to a site visit(s) to ensure proper system installation and operation under following parameters:

1. Qualifications for factory-certified field service engineer:

a. Minimum experience of 2 years training in the electrical/electronic field.
b. Certified by the equipment manufacturer on the system installed.

2. Make site visits upon completion of installation of modular dimming control system:

a. Verify connection of power feeds and load circuits.

b. Verify connection and location of controls.
c. Program system data.
d. Verify proper connection of digital control link.
e. Verify proper operation of manufacturers interfacing equipment.
f. Obtain sign-off on system functions.
g. User to be trained on system operation.

END OF SECTION

Pico Library
Santa Monica, CA

LIGHTING DESIGN ALLIANCE

LIGHTING FIXTURE SCHEDULE
AND
FIXTURE ILLUSTRATIONS

THE LIGHTING DESIGN
ALLIANCE, INC.

LOS ANGELES
CHICAGO
DUBAI UAE

LOS ANGELES
2830 TEMPLE AVENUE
LONG BEACH, CA 90806-2213

T: 562.989.3843
F: 562.989.3847

www.LightingDesignAlliance.com

Initial Issue:
2 September 2011
Revisions:
50% CD – 20 December 2011
65% CD – 20 January 2012
Addendum – 21 February 2012

FIXTURE NOTES:

1) Fixtures shall have appropriate UL label, damp, or wet as required by local codes.
2) Fixtures shall include accessories for installation according to local and national codes.
3) Prior to ordering lighting equipment, the contractor shall verify locations and recess depths.
4) Lamps shall be installed according to the attached fixture schedule.
5) Contractor shall verify final voltages and ceiling trim compatibility prior to ordering fixtures.
6) Ceiling thickness in excess of 3/4" shall be identified in writing by Contractor/Architect.
7) Fixtures shall be ordered with the appropriate ballasts that have UL and CBM labels. Ballasts shall conform to Title 24 requirements for performance, switching, and wiring (i.e. tandem).
8) Provide approved fire-rated enclosures for lighting fixtures located in a fire-rated ceiling.
9) Walls directly illuminated shall be installed and finished in a manner to eliminate shadows or blemishes (i.e. hang dry wall vertically).
10) Responsibility for emergency lighting, Title 24 calculations, and circuiting to meet code conformance remains with the Architect and Electrical Engineer as required by law.
11) LED fixtures requiring digital communication for complete functionality shall be provided with allowances for: routing and pulling required digital control wiring as per the manufacture's specification; termination of digital control wiring for signal transmission; addressing, commissioning, and verification of all LED digital controls; interface with dimming and control system or building management controls as necessary.
12) Fixtures located in an insulated ceiling area, shall have an IC housing (electrical contractor to coordinate).
13) The Architect and Lighting Designer shall approve fixture substitutions prior to bid. Contractor shall supply a sample and/or photometric data if requested. If substitution is rejected, Contractor shall provide specified product.
14) All fixture voltages to be determined by electrical engineer.

Latest revisions in **BOLD**

TYPE	DESCRIPTION	LOCATION	MANUFACTURER & CATALOG #	NUMBER OF LAMPS & TYPE	TOTAL WATTS	REMARKS	REV #
BM1	Pole mounted metal halide walkway fixture	Exterior walkways	Lithonia AS1-150M-SR3-RPA-SCWA-DNA-L/LP Pole: RTA-20-5C-DNA	Philips (1) MHC150/U/MP/ 4K MasterColor Or equal by GE	180	Installation to match existing post tops in Thelma Terry Parking lot in all respects. Rotate optics to match direction as shown in plans.	
DT1	Table lamps permanently mounted on tables	Desks	Louis Poulsen AJ-T	Philips (1) A-19/IF Medium	60		
DT2	Surface mounted warm white 3000K linear LED single rail table lamp permanently mounted on tables	Eastern reading areas	Vode 507-RR-L07-SA-30-A	Warm White LEDs included	3.4w		
DT2a	Surface mounted warm white 3000K linear LED double rail table lamp permanently mounted on tables	Reading desks	Vode 517-RR-L28-SA-30-A	Warm White LEDs included	16.8w		
FF1	Surface mounted 28 watt linear T5 fluorescent 4" by 4' rectangular wet labeled downlight with acrylic lens	Canopies	Axis Lighting WBS-F-4-T5-1-FINISH-volts-ERS-1-SC-TF	Philips (1) F28T5/ADV830/ ALTO Or equal by: GE, Sylvania	28		

THE LIGHTING DESIGN ALLIANCE, INC.
LOS ANGELES
2830 TEMPLE AVENUE
LONG BEACH, CA 90806-2213
T: 562.989.3843
F: 562.989.3847
www.LightingDesignAlliance.com

TYPE	DESCRIPTION	LOCATION	MANUFACTURER & CATALOG #	NUMBER OF LAMPS & TYPE	TOTAL WATTS	REMARKS	REV #
GD1	**In-grade recessed warm white 2900K LED uplight with 10.3" round aperture, 20 degree adjustability, and medium beam distribution**	**Exterior Signage**	**Lumascape** **LS853LED-20H6-A-M-82-M-29-Q-volts**	**Warm White LEDs included**	**20**	**Fixture to be installed in concrete block out. Provide with LS6052-K-SP pre-installation kit.**	**3**
JD1	Spike mounted warm white LED tree uplight	Landscape	Lumiere Cambria 203 Series	Warm White LEDs included	Allow 30		
JD2	Surface mounted wet location with warm white LED uplights to highlight fabric canopies	Exterior fabric canopies	Lumenpulse LBM-VOLTS-30K-FL-BK-DIM	Warm White LEDs included	27	Dimmable via 0-10 volt control.	
PC1	Pendant mounted 26 watt compact fluorescent decorative chandelier, with Lutron Ecosystem dimmable ballast	Seating Areas	Lightolier PM Series PM32MX1SA-PG01-GL01-SK01	Philips (1) PL-C 26W/830/ALTO Or equal by: GE, Sylvania	26	Dimmable via Lutron Ecosystem and on photocell control.	
PF1	Pendant mounted 28 watt linear T5 fluorescent striplight with chain mounting and wire guard	Support Spaces	Lightolier SV-4-S-1-28-UNV-PG-SV5GXW4	Philips (1) F28T5/ADV830/ALTO Or equal by: GE, Sylvania	28		
RD1	Recessed 1500 lumen 3000k warm white LED downlight with 4" round aperture	Throughout	Lightolier Frame-in Kit: C6L15-N-volts	Warm white LED included	27		2
RD2	Recessed 400 lumen 3000k warm white LED downlight with small 2" round aperture and wet labeled downlight with painted white trim	Entry ceilings	Lightolier Frame-in Kit: C2L04DL-30K-17-R-1 Reflector: CL2-DL-WH-P	Warm white LED included	10		
RD3	Recessed 1500 lumen 3000k warm white LED downlight with 4" round aperture and glass trim	Throughout	Lightolier Decorative Trim: D6A01 Frame-in Kit: C6L15-N-volts	Warm white LED included	27		2

THE LIGHTING DESIGN ALLIANCE, INC.
LOS ANGELES
2830 TEMPLE AVENUE
LONG BEACH, CA 90806-2213
T: 562.989.3843
F: 562.989.3847
www.LightingDesignAlliance.com

TYPE	DESCRIPTION	LOCATION	MANUFACTURER & CATALOG #	NUMBER OF LAMPS & TYPE	TOTAL WATTS	REMARKS	REV #
RF1	NO LONGER USED	~~Group Study Rooms~~	~~Lightolier~~ ~~SN-3-S-1-21-HPF-volts- Lutron H-Series Ecosystem ballast~~	~~Philips~~ ~~(1) F21T5/ADV830/ ALTO~~ ~~Or equal by: GE, Sylvania~~	~~21~~	~~Contractor to verify length of fixture on sight.~~ ~~Dimmable via Lutron H-Series Ecosystem and on photocell control.~~	2
RF2	Recessed 28 watt linear T5 fluorescent 4" by 4' downlight with acrylic lens	IT and Back of house areas	Lightolier CT3-F-P-A-S-4-U-volts	Philips (1) F28T5/ADV830/ ALTO Or equal by: GE, Sylvania	28		2
RF3	Recessed 28 watt linear T5 fluorescent 4" by 4' wet label downlight with acrylic lens	Exterior Soffit	Axis Lighting WBR-F-4-T5-1-W-volts-ERS-1-TF	Philips (1) F28T5/ADV830/ ALTO Or equal by: GE, Sylvania	28		
RZ1	Recessed (2) lamp 28 watt linear T5 fluorescent downlight with (2) Adjustable warm white LED accent lights	Throughout	Pinnacle Edge EX4	Philips Linear Fluorescent: (2) F28T5/ADV830/ ALTO Or equal by: GE, Sylvania LED Downlight: Warm white LEDs included	Allow 96	Dimmable via Lutron H Series Ecosystem for fluorescent lighting and Ecosystem driver for LED downlights. Fluorescent and downlight fixtures on separate circuits, and individually controlled.	2
RZ1a	Same as RZ1 but with 3' linear T5 fluorescent downlight	Workroom	Pinnacle Edge EX4	Philips Linear Fluorescent: (2) F21T5/ADV830/ ALTO Or equal by: GE, Sylvania LED Downlight: Warm white LEDs included	Allow 82	Dimmable via Lutron H Series Ecosystem for fluorescent lighting and Ecosystem driver for LED downlights. Fluorescent and downlight fixtures on separate circuits, and individually controlled.	2
SD1	Surface mounted warm white linear LED striplight **with clear lens** suitable for exterior applications	Book Drop-off	Tivoli Lighting LED Strip: TBL-O-WWH-2-MD-12-PSU Mounting Accessory: TPL-TUBE-C-**length**	Warm white LED included	1.15w/ft	Contractor to provide all necessary wiring accessories as needed. Contractor to verify length on site.	**3**

THE LIGHTING DESIGN ALLIANCE, INC.
LOS ANGELES
2830 TEMPLE AVENUE
LONG BEACH, CA 90806-2213
T: 562.989.3843
F: 562.989.3847
www.LightingDesignAlliance.com

TYPE	DESCRIPTION	LOCATION	MANUFACTURER & CATALOG #	NUMBER OF LAMPS & TYPE	TOTAL WATTS	REMARKS	REV #
SD2	**Surface mounted warm white linear LED striplight with frosted lens suitable for exterior applications**	**Stairs**	**Tivoli Lighting** **LED Strip: TBL-O-WWH-2-MD-12-PSU** **Mounting Accessory: TPL-TUBE-F-length**	**Warm white LED included**	**1.15w/ft**	**Contractor to provide all necessary wiring accessories as needed.** **Contractor to verify length on site.**	**3**
SF1	Surface mounted low profile T5 fluorescent striplight within cove with Lutron Ecosystem dimmable ballast	Skylights	Lightolier SN-4-S-1-28-HPF-volts- Lutron H-Series Ecosystem ballast	Philips (1) F28T5/ADV830/ ALTO Or equal by: GE, Sylvania	Allow 7w/ft.	Dimmable via Lutron H-Series Ecosystem and on photocell control.	2
SF1a	Surface mounted 3'-0" 21 watt linear T5 fluorescent striplight within cove with Lutron Ecosystem dimmable ballast	Group Study Rooms	Lightolier SN-3-S-1-21-HPF-volts- Lutron H-Series Ecosystem ballast	Philips (1) F21T5/ADV830/ ALTO Or equal by: GE, Sylvania	21	Contractor to verify length of fixture on sight. Dimmable via Lutron H-Series Ecosystem and on photocell control.	2
SF2	Surface mounted 28watt T5 fluorescent under cabinet striplight	Staff Room	HE Williams 1SF-4-128T5S-A12125-EB1-volts	Philips (1) F28T5/ADV830/ ALTO Or equal by: GE, Sylvania	Allow 7w/ft.		
WC1	Wall mounted (2) lamp 26 watt compact fluorescent vanity light	Restroom	Louis Poulsen AJE-17.7-2/26/CF-volts-WHT-WALL	Philips (2) PL-C 26W/830/ ALTO Or equal by: GE, Sylvania	42		
WD1	Wall mounted warm white LED floodlights	Community room exterior Wall	Lumenpulse LBM-volts-30K-FL-BK-DIM	Warm white LED included	Allow 40	Dimmable via 0-10 volt control.	
WD2	Wall recessed LED step light with 12.5" by 2.75" rectangular aperture	Landscape Steps	Bega 2384LED	Warm white LED included	10		
WD3	Wall recessed 1000 lumen 3000k warm white LED accent light with spot reflector with 8 1/2" by 7 5/8 " rectangular aperture with white powder coat 3/4" trim and double gimbal ring	Community Room	Architectural Lighting Works RCST-1-XC8030-1000-H-INT-S-volts-WH-SOL	Warm White LEDs included	15	Fixture mounted within the vertical wall within the community room skylight. Provide with diffuse Solite Lens Dimmable via 0-10 volt control.	2

THE LIGHTING DESIGN ALLIANCE, INC.
LOS ANGELES
2830 TEMPLE AVENUE
LONG BEACH, CA 90806-2213
T: 562.989.3843
F: 562.989.3847
www.LightingDesignAlliance.com

TYPE	DESCRIPTION	LOCATION	MANUFACTURER & CATALOG #	NUMBER OF LAMPS & TYPE	TOTAL WATTS	REMARKS	REV #
WF1	Stack mounted 28 watt linear T5 fluorescent 4' stack light with low profile asymmetric distribution with Lutron Ecosystem dimmable ballast	Stacks	Vode Lighting WG-K1-4C-ST-24-IB-B-volts-0-HE-A-1-2-Lutron Ecosystem ballast	Philips (1) F28T5/ADV830/ ALTO Or equal by: GE, Sylvania	28	Dimmable via Lutron H-Series Ecosystem and photocell control. Fixture to be cantilevered out 12" inches from the face of the stacks.	2
WF1a	Same as WF1 but with 3' fixture length	Stacks	Vode Lighting WG-K1-3C-ST-24-IB-B-volts-0-HE-A-1-2- Lutron Ecosystem ballast	Philips (1) F21T5/ADV830/ ALTO Or equal by: GE, Sylvania	21	Dimmable via Lutron H-Series Ecosystem and photocell control. Fixture to be cantilevered out 12" inches from the face of the stacks.	2
WF2	Stack mounted (2) 28 watt linear T5 fluorescent 4' stack light with low profile asymmetric distribution with Lutron Ecosystem dimmable ballast	Stacks	Vode Lighting WG-K2-4C-ST-24-IB-B-volts-0-HE-A-1-2- Lutron Ecosystem ballast	Philips (2) F28T5/ADV830/ ALTO Or equal by: GE, Sylvania	54	Dimmable via Lutron H-Series Ecosystem and photocell control. Fixture to be cantilevered out 12" inches from the face of the stacks.	2
WF2a	Same as WF2 but with 3' fixture length	Stacks	Vode Lighting WG-K2-3C-ST-24-IB-B-volts-0-HE3-A-1-2- Lutron Ecosystem ballast	Philips (2) F21T5/ADV830/ ALTO Or equal by: GE, Sylvania	42	Dimmable via Lutron H-Series Ecosystem and photocell control. Fixture to be cantilevered out 12" inches from the face of the stacks.	2
WF3	Stack mounted 28 watt linear T5 fluorescent 4' stack light with low profile asymmetric distribution mounted on custom 15" vertical strut system with Lutron Ecosystem dimmable ballast	Lower Stacks	Vode Lighting Fixture: WG-K2-4C-ST-24-IB-B-volts-0-HE-A-1-2- Lutron Ecosystem ballast Strut: To be determined	Philips (2) F28T5/ADV830/ ALTO Or equal by: GE, Sylvania	54	Dimmable via Lutron H-System Ecosystem and photocell control. Fixture to be mounted on a 15" vertical strut system provided by Vode. Fixture to be cantilevered out 12" inches from the face of the stacks.	2
WF3a	Same as WF3 but with 3' fixture length	Lower Stacks	Vode Lighting Fixture: WG-K2-3C-ST-24-IB-B-volts-0-HE3-A-1-2- Lutron Ecosystem ballast Strut: To be determined	Philips (2) F21T5/ADV830/ ALTO Or equal by: GE, Sylvania	42	Dimmable via Lutron H-Series Ecosystem and photocell control. Fixture to be mounted on a 15" vertical strut system provided by Vode. Fixture to be cantilevered out 12" inches from the face of the stacks.	2
CDS1	Wireless daylight sensor located at ceiling plane as part of CWS1	Throughout	Lutron LRFX-DCRB	NA	NA	Allow for (8) sensors.	2

THE LIGHTING DESIGN ALLIANCE, INC.
LOS ANGELES
2830 TEMPLE AVENUE
LONG BEACH, CA 90806-2213
T: 562.989.3843
F: 562.989.3847
www.LightingDesignAlliance.com

TYPE	DESCRIPTION	LOCATION	MANUFACTURER & CATALOG #	NUMBER OF LAMPS & TYPE	TOTAL WATTS	REMARKS	REV #
CWS1	Wall recessed Ecosystems Grafik Eye room controller and dimmer with 4 scene preset and integral astronomical time clock connected to daylight sensors	Throughout	Lutron GRAFIK EYE QS with Ecosystem	NA	NA	Quantity to be determined based of total number of zones. Allow for (2) 16 zone Grafik Eyes.	2
CWS2	Wall recessed 2-button with raise/lower switch	Throughout	Lutron 2BLR	NA	NA	Allow for (2) switches.	2

End of Fixture Schedule

THE LIGHTING DESIGN ALLIANCE, INC.
LOS ANGELES
2830 TEMPLE AVENUE
LONG BEACH, CA 90806-2213
T: 562.989.3843
F: 562.989.3847
www.LightingDesignAlliance.com

AS
AST

Aeris™

Intended Use
For streets, walkways, parking lots and surrounding areas.

Construction
Housing: Rugged, die-cast, single-piece aluminum housing with nominal 1/8" wall thickness.

Door Assembly: Die-cast doorframe, impact-resistant, tempered glass lens, 3/16" thick, fully sealed with one-piece tubular silicone gasket.

Finish: Standard finish is dark bronze polyester powder finish. Additional architectural colors available; see www.lithonia.com/archcolors.

Optics
Anodized segmented reflectors for superior uniformity and control. Reflectors attach with tool-less fasteners and are rotatable and interchangeable. Four full cutoff distributions available: Type II (roadway), Type III (asymmetric), Type IV (forward throw), and Type V (symmetric square).

Electrical
Ballasts: Mounted on removable power tray and have positive locking disconnect plugs. All ballasts are 100% factory tested. High reactance, high power factor for 150W and below. Constant wattage autotransformer 175W and above. MH: 150W and below are standard with pulse-start ignitor technology. Super CWA Pulse Start ballasts, 88% efficient and EISA legislation compliant, are required for 151-400W (must order SCWA option) for U.S. shipments only. CSA, NOM or INTL required for probe start shipments outside the U.S. Compact fluorescent uses an electronic high-frequency ballast.

Socket: Porcelain, medium-base socket for AS1, mogul-base socket for AS2, with copper alloy nickel-plated screw shell and center contact. Ceramic metal halide lamps are recommended for use in applications where superior color rendition, lumen maintenance and longer lamp life are desired. Fluorescent is four-pin positive latching thermoplastic. LPI is standard 35K for CFL.

Installation
Heavy-duty easy-mount block attaches to pole or wall to provide ease of installation as well as ensured alignment and leveling. Additional backing plate and receiver used to mount AST suspend tension rod. AST1 mounts 9.64" lower than specified pole height. AST2 mounts 13.89" lower than specified pole height.

Listings
UL Listed (standard). CSA Certified or NOM Certified (see Options). UL Listed for 25 °C ambient and wet locations. U.S. Patent No. D447, 590. Canadian Patent No. 94324. IP65 Rated.

LIGHTING DESIGN ALLIANCE

Pulse Start HID Ballast/Lamp Systems

NIGHTTIME FRIENDLY

ORDERING INFORMATION

For shortest lead times, configure products using **bolded options**.

Example: AS1 150M SR2 TB SPA LPI

Series	Lamp type[1]				Distribution[1]		Voltage	Ballast		Mounting[14]			
AS1	High pressure sodium[2]	400S	**250M**	Compact fluorescent	**SR2**	Type II segmented	**120**	**(blank)**	Magnetic ballast	Ships included		DCAS1	AS1 Deco arm for square pole
AS2	35S[3]	Metal halide	320M[7]	2/32TRT[9]	**SR3**	Type III segmented	**208**[10]	CWI	Constant wattage isolated[12]	**SPA**	Square pole mounting block	DCAS1R	AS1 Deco arm for round pole
AST1	50S[4]	50M[2, 5]	**400M**	42 TRT	**SR4SC**	Type IV segmented, FT, sharp cutoff	240[10]	**SCWA**	Super CWA ballast	**RPA**	Round pole mounting block	DCAS2	AS2 Deco arm for square pole
AST2	70S	70M[2, 5]	Metal halide ceramic[8]	2/42TRT[9]	**SR4W**	Type IV segmented, FT, wide	**277**			WBA	Wall bracket (up or down)[15]	DCAS2R	AS2 Deco arm for round pole
	100S	100M[2]	50MHC[2, 5]	57TRT	SR5S	Type V segmented, square	**347**			Ships separately[16, 17]			
	150S	**150M**	70MHC[2, 5]	70TRT			480[10]			ASKMA1	AS1 mast arm adaptor		
	200S	**175M**[6]	100MHC[2]				**TB**[11]			ASKMA2	AS2 mast arm adaptor		
	250S	200M[7]	150MHC				23050HZ[12]						
							MVOLT[13]						

Options						Finish		Lamped	
Ships installed		PER	NEMA twist-lock receptacle only[20]	Ships separately[16]		**(blank)**	Dark bronze (std.)	**LPI**	Lamp included
SF	Single fuse, 120V, 277V, 347V[18]	HS	House-side shield[21]	PE1	NEMA twist-lock PE (120V-240V)	**DBL**	Black	**L/LP**	Less lamp
DF	Double fuse, 208V, 240V, 480V[18]	**CSA**	Meets Canadian standards	PE3	NEMA twist-lock PE (347V)	DGC	Charcoal gray		
GMF	Internal slow-blow fusing	NOM	Meets Mexican standards (consult factory)	PE4	NEMA twist-lock PE (480V)	DMB	Medium bronze		
ELDW	Bodine emergency battery backup[18]	INTL	Available for MH probe start shipping outside the U.S.	PE7	NEMA twist-lock PE (277V)	**DNA**	Natural aluminum		
EC	Emergency circuit[18, 19]			SC	Shorting cap for PER option	**DWH**	White		
QRS	Quartz restrike system[18, 19]			VG	Vandal guard[22]	CR	Enhanced corrosion resistance		
						CRT	Non-stick protective coating (black)		

ADDITIONAL INFORMATION

For additional product information, visit www.lithonia.com.

CONFIGURATIONS

SERIES	LAMP TYPE	DISTRIBUTION
AS1, AST1	35S, 50S, 50M, 50MHC, 70S, 70M, 70MHC, 100S, 100M, 100MHC,150S, 150M, 150MHC, 175M, 42TRT, 57TRT, 70TRT	SR2, SR3,SR4SC, SR5S
AS1, AST1	2/32TRT, 2/42TRT	SR3
AS2, AST2	175M, 200S, 200M, 250S, 250M, 320M, 350M, 400S, 400M	SR2, SR3, SR4SC, SR4W, SR5S

DRILLING PATTERNS

(SEE POLE ORDERING, PAGE 588)	
DM19AS	1 at 90°
DM28AS	2 at 180°
DM29AS	2 at 90°
DM39AS	3 at 90°
DM49AS	4 at 90°
DM32AS	3 at 120° (round poles only)

Drawings are for dimensional detail only and may not represent actual mechanical configuration. Dimensions are shown in inches (centimeters) unless otherwise noted.

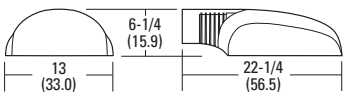

AS1/AST1
EPA: 0.7ft² (.07 m²)
Max. weight: 25.9 lbs (11.7 kg)

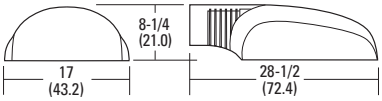

AS2/AST2
EPA: 1.2ft² (1.1 m²)
Max. weight: 40 lbs (18.2 kg)

Notes

1. Specify lamp type and distribution. See Configurations table.
2. Not available with SCWA.
3. 120V only.
4. 120V and 277V only.
5. Not available with 480V.
6. Not available AS1/AST1 SCWA.
7. Must be ordered with SCWA.
8. Not applicable with L/LP.
9. Available in SR3 only.
10. Must specify CWI for use in Canada.
11. Optional multi-tap ballast (120V, 208V, 240V, 277V). In Canada 120V, 277V, 347V; ships as 120V/347V.
12. Consult factory for available wattages.
13. Multi-volt electronic ballast (compact fluorescent only) capable of operating on any line voltage between 120V and 277V.
14. Mounting block included standard.
15. Mounted in lens up orientation, fixture is damp location rated. AST available in down orientation only.
16. May be ordered as accessory. Not available with AST.
17. Must specify finish.
18. SF, DF, QRS, EC, or ELDW options cannot be ordered together.
19. Maximum allowable wattage lamp included.
20. Photocell not included.
21. SR2, SR3, SR4W only.
22. Prefix with fixture name and size (e.g., AS1VG).

LITHONIA LIGHTING

1-800-279-8041 | www.lithonia.com

PSG10

THE LIGHTING DESIGN ALLIANCE, INC.
LOS ANGELES
2830 TEMPLE AVENUE
LONG BEACH, CA 90806-2213
T: 562.989.3843
F: 562.989.3847
www.LightingDesignAlliance.com

louis poulsen

AJ Table 113

table & floor

Publish
[illegible]

Design
Arne Jacobsen

Concept
AJ Table creates direct and angled illumination. The lighting characteristics make it suitable when placed in a situation where distinct and directed illumination is required.

Finish
Olive/green, yellow/green, petroleum, red or sand, black, graphite gray or white, wet painted.

Material
Base: Die-cast zinc. Shade: Spun steel. Stem: Steel.

Mounting
Cord type: black. Cord length: 8'. Switch: On/off switch located in the base.

Weight
Max. 6 lbs.

Label
CE, Ship location: [illegible]

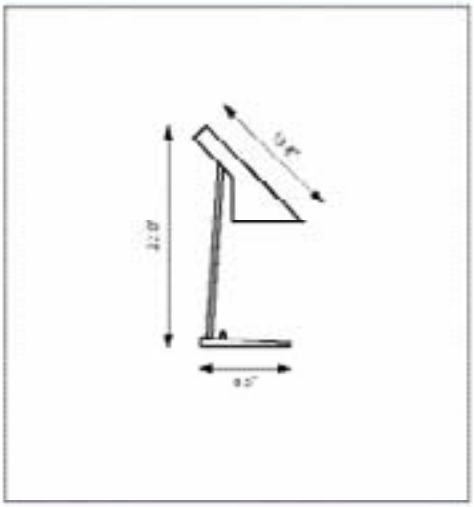

Product code	Light source	Voltage	Finish
AJ-T	1/40W/A-T2/E [illegible]	120V	BLUE/GREEN YELLOW/GREEN PETROLEUM RED SAND BLK GRAPH GREY WHT

Information
1. The composite EP version has the following classification: Ingress Protection Code: IP20.

THE LIGHTING DESIGN ALLIANCE, INC.
LOS ANGELES
2830 TEMPLE AVENUE
LONG BEACH, CA 90806-2213
T: 562.989.3843
F: 562.989.3847
www.LightingDesignAlliance.com

LIGHTING DESIGN ALLIANCE

vode

500 Series

Desk Light

VodeRail T5 & LED

RaceRail

RaceRail

500 Series Desk Light for T5HE fluorescent and LED. Portable design in RaceRail profile. On/off switch. Brushed aluminum finish standard. For complete details, see specification guides at vode.com

THE LIGHTING DESIGN ALLIANCE, INC.

LOS ANGELES
2830 TEMPLE AVENUE
LONG BEACH, CA 90806-2213

T: 562.989.3843
F: 562.989.3847
www.LightingDesignAlliance.com

TYPE
DT2, DT2a

VodeRail/T5

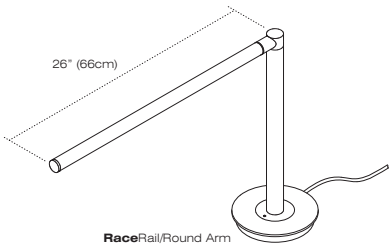

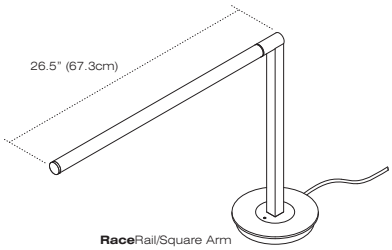

VodeRail/LED

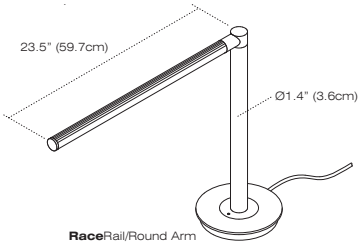

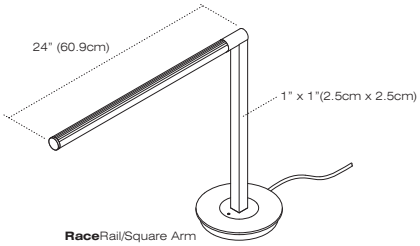

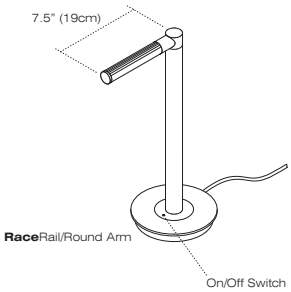

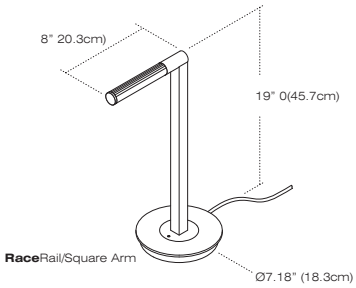

THE LIGHTING DESIGN ALLIANCE, INC.

LOS ANGELES
2830 TEMPLE AVENUE
LONG BEACH, CA 90806-2213

T: 562.989.3843
F: 562.989.3847
www.LightingDesignAlliance.com

VodeRail/LED/Double

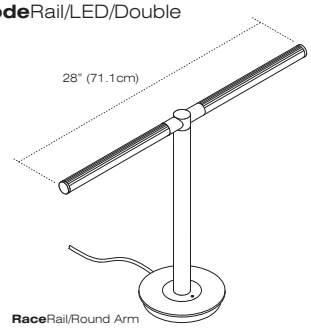

RaceRail/Round Arm

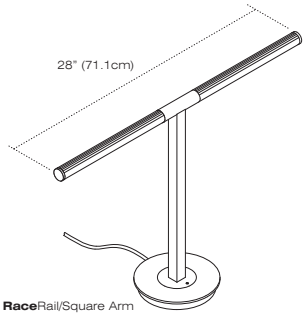

RaceRail/Square Arm

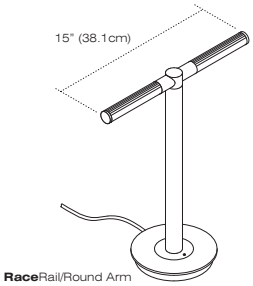

RaceRail/Round Arm

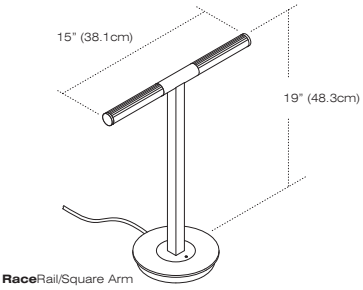

RaceRail/Square Arm

PICO PUBLIC LIBRARY | FEBRUARY 21, 2012 | LIGHTING CATALOG PAGE

THE LIGHTING DESIGN ALLIANCE, INC.

LOS ANGELES
2830 TEMPLE AVENUE
LONG BEACH, CA 90806-2213

T: 562.989.3843
F: 562.989.3847
www.LightingDesignAlliance.com

LIGHTING DESIGN ALLIANCE

500 Series

Desk Light

VodeRail T5 & LED - Specification Sheet

Specification Code

Vode Code	Rail Type	Rail Length	Arm Type	Color Temperature	Finish
505 507 517	RR	3	4	5	6

1	Vode Code **505** single rail T5 **507** single rail, LED **517** double rail, LED
2	Rail Type **RR** **Race**Rail
3	Rail Length **T5 Single Rail** **T26** 26" (66cm) **LED Single Rail** **L07** 7.5" (19cm) **L22** 23.5" (59.7cm) **LED Double Rail** **L14** 15" (38.1cm) **L28** 28" (71.1cm)
4	Arm Type **RA** round arm **SA** square arm
5	Color Temperature **30** warm white – 3000K **35** neutral white – 3500K **41** neutral white – 4100K
6	Finish **A** brushed aluminum (standard) **BL** black anodized
	Technical Data **T5** (lamp included) input voltage 120v wattage 14w **LED** input voltage 120v wattage (dependent on rail length) **L07** 3.4w **L22** 16.8w **L14** 6.8w **L28** 16.8w

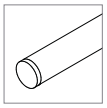

RaceRail/T5

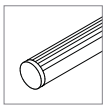

RaceRail/LED

Due to rapid advancements in LED technology including optics and power configurations for LED, we recommend a visit to vode.com for the latest LED specifications and innovations from Vode.

THE LIGHTING DESIGN ALLIANCE, INC.

LOS ANGELES
2830 TEMPLE AVENUE
LONG BEACH, CA 90806-2213

T: 562.989.3843
F: 562.989.3847
www.LightingDesignAlliance.com

SURFACE T5 LAMPING

PROJECT INFORMATION

Project:

Type:

Notes:

REVIT files are available for download at www.axislighting.com

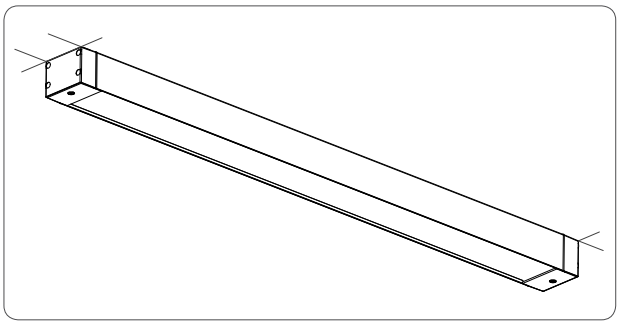

PRODUCT ORDERING CODE

product id	optics lens	length/ft	lamp	lamp config.	finish	voltage	ballast	circuits	suspension/ mounting	power feed	other	controls	custom
WBS			**T5**						**SC**				

WBS surface

2 **3** **4** **5** **6** **8**

1 lamp
2 lamps

UNV
120
277
347*
*Please consult factory

1 one circuit
2 two circuits
+E em. circuit

EF end feed
TF top feed

OS occ.
*See Integrated Controls Guide for further details.

F frosted lens
C clear lens
S satin lens

T5

W white
AP alu. paint
C custom

ERS rapid start
D dimming
T step dimming
*See Ballast Guide for further details.

SC surface solid ceiling

B# battery pack (specify details)
F fuse
FW# flex whip (6' std)

C custom (describe below)

Dimming Ballast, Battery Pack and Integrated Control Details:

Custom Description:

Specification sheets for other lamping are available for download at www.axislighting.com

DIMENSIONS

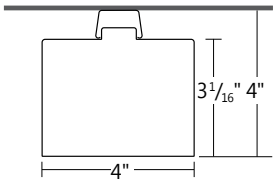

LAMPING CONFIGURATIONS

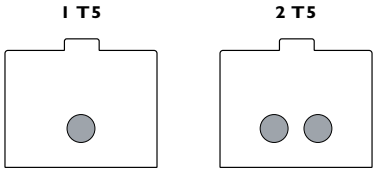

SIDE VIEW DIMENSIONS

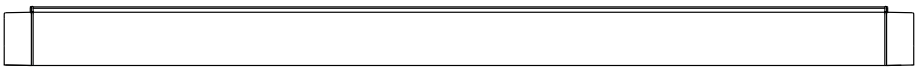

T5/T5HO - 4" (50 3/8") **T8** - 4" (52 5/16")
T5/T5HO - 8" (96 15/16") **T8** - 8" (100 5/16")

FILE NAME:WBS.T5.SPEC December 12, 2011 Page: 1 / 4

ÉCLAIRAGE axis LIGHTING
1.800.263.AXIS
[T] 514.948.6272
[F] 514.948.6271
www.axislighting.com

Product design and development is an ongoing process at Axis Lighting. We reserve the right to change specifications. Contact Axis for the latest product information.

© 2010 Axis Lighting Inc.

THE LIGHTING DESIGN ALLIANCE, INC.
LOS ANGELES
2830 TEMPLE AVENUE
LONG BEACH, CA 90806-2213
T: 562.989.3843
F: 562.989.3847
www.LightingDesignAlliance.com

SURFACE T5 LAMPING

MOUNTING OPTIONS

SC SURFACE SOLID CEILING

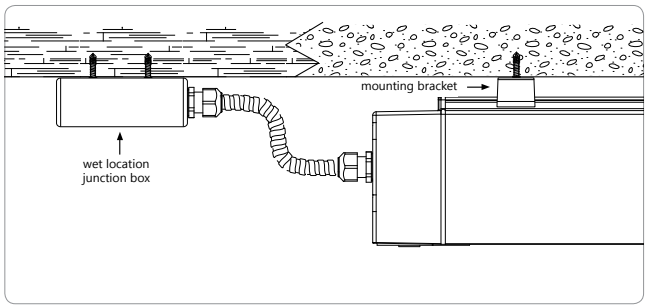

Power end feed

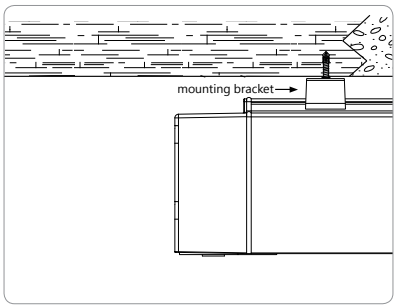

Non power feed

OTHER MOUNTING OPTIONS

WET BEAM is available with recessed, pendant, and wall mounted options.

CONSTRUCTION

Housing	Extruded Aluminum (0.062'' nominal) 70% Recycled Content
End Cap	Die Cast Zinc (0.070" nominal)
Interior Brackets	Die Formed Sheet Steel (16 ga)
Gaskets	Moulded Elastomer (0.100" nominal)
Lens Gaskets	Extruded Elastomer (0.045" nominal)
Clear Lens	Extruded Acrylic (0.075'' nominal) Clear: 90% transmissive
Frosted Lens	Extruded Acrylic (0.070'' nominal) Frosted: 85% transmissive
Satin Lens	Extruded Acrylic (0.070'' nominal) Frosted: 68% transmissive
Lamp Options	T5, T5HO, T8

WEIGHT

4 ft	12.8 lbs / 5.8 Kg
8 ft	24.5 lbs / 11.1 Kg

GASKETTED FIXTURE

With it's gasketted end cap and lens the Wet Beam is made for wet locations, it is ideal for exterior soffits and canopies of malls, hospitals and other institutions.

JOINER SYSTEM

Wet Beam modular system consist of smaller modules joined and gasketted together allowing for system runs in lengths of 4' and 8' as well as custom lengths up to 8'.

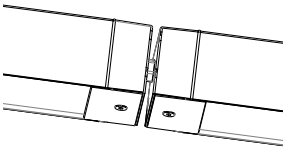

* For continuous rows allow 2" for connectors between each fixture.

POWER FEED

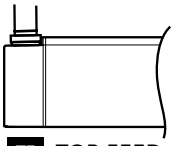

TF TOP FEED

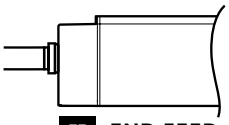

EF END FEED

FINISH

Aluminium paint, Powder Coated and custom finishes are also available.

ELECTRICAL

Ballast Options	Electronic Rapid Start, Dimming (0-10V, Line, Step, EcoSystem)
Emergency	Emergency Battery Pack or Circuit
Voltage	120, 277, 347 2, UNV

APPROVALS

Certified wet locations to UL and CUL standards

Row configuration, specification sheets and mounting spacing guides are available for download at: www.axislighting.com

ÉCLAIRAGE axis LIGHTING
1.800.263.AXIS
[T] 514.948.6272
[F] 514.948.6271
www.axislighting.com

Product design and development is an ongoing process at Axis Lighting. We reserve the right to change specifications. Contact Axis for the latest product information.

© 2010 Axis Lighting Inc.

THE LIGHTING DESIGN ALLIANCE, INC.
LOS ANGELES
2830 TEMPLE AVENUE
LONG BEACH, CA 90806-2213
T: 562.989.3843
F: 562.989.3847
www.LightingDesignAlliance.com

1300 Industrial Road, Unit #19
San Carlos, CA 94070

Tel: 1-(650)-595-LUMA(5862)
Fax: 1-(650)-595-5820
Email: info@lumascape.com
FREE CALL 1-866-695-LUMA(5862) US & Canada

LUMASCAPE USA INC.

LIGHTING DESIGN ALLIANCE

LS853LED

Ingrade

humantouch™ grip glass™ opticlear™ microantileach™

IP68 IK10 c UL us

The LS853LED is a full featured, shallow depth ingrade luminaire featuring lumen output and efficacy exceeding metal halide. This luminaire also features a universal input driver (120-277 V), and measures only 7.1 inches (180 mm) deep (in direct burial format). The ability to aim the luminaire ensures the most efficient light delivery can be set according to the site conditions.

LS853LED Round Flush Cover

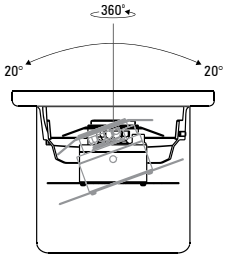

Specifications

Lamp source	20 W LED ☐ White (4 300 K typical) Warm white (2 900 K typical) ■ Blue (470 nm) *Other colors by request* ■ RGB *(consult factory for full details)*
UL classification	Suitable for wet locations
Lumen Maintenance (L70)	85,000 hrs @ 25 °C
Control Protocol *(optional, consult factory)*	0-10 V RGB via DMX
IP rating	IP68
Construction	316 marine grade stainless steel
Installation types	**Pre-Installation Blockout** Concrete pour, drive-over etc. **Direct Burial** Landscapes, planters etc.
Drive-over	With **OptiClear™** lens and pre-installation blockout (LS6052-K or LS6052-K-SP)
Static load rating	9 260 lb (4 200 kg) with **OptiClear™** lens and pre-installation blockout (LS6052-K or LS6052-K-SP)
Impact rating	IK10 with **OptiClear™** lens
Standard inclusions	Teflon coated cover screws **MicroAntiLeach™** wire entry Thermal cutout
Ambient operating temperature	-22 °F to 122 °F (-30 °C to +50 °C)
Surface temperature	≤113 °F (45 °C)
Photometrics	www.lumascape.com

Any luminaire can become hot - take care with appropriate use and placement

THE LIGHTING DESIGN ALLIANCE, INC.

LOS ANGELES
2830 TEMPLE AVENUE
LONG BEACH, CA 90806-2213

T: 562.989.3843
F: 562.989.3847
www.LightingDesignAlliance.com

Why Use LS6052-K Pre-Installation Blockout?

The LS6052-K pre-installation kit (order separately) is a key aspect of Lumascape's approach to engineering high performance ingrade product. The LS6052-K acts as a blockout, and is intended for installation before the luminaire however it has other special functions. To simplify the installation, every LS6052-K is supplied complete with a 4-way, PVC junction box, inside which the installer can make all necessary connections, and allows the completion of all wiring even before the luminaire arrives on site. This method also ensures the luminaire itself is not damaged during concreting or other site works. ***Note: The junction box remains serviceable after installation***. To complete the installation, Lumascape provides an IP68 connector, enabling a tool-free final connection from the luminiare to the branch circuit. In addition, this connector is readily detachable, allowing for off-site maintenance.

Why Use LS6052-K-SP Pre-Installation Blockout?

The LS6052-K-SP pre-installation kit (order separately) is ideal for use in applications where maximum flexibility for the type and location of branch circuit connections are required or where exact site conditions may be unknown. The LS6052-K-SP is also for use with all applications requiring a color changing or dimmable lighting scheme. For use with the LS6052-K-SP, Lumascape provides the LS853LED complete with 6.5' of factory-installed hookup wire and a ½" NPT adapter (complete with a Microantileach seal). This provides the installer with greater flexibility to determine the type and location of the branch circuit connection. This option is also 100% hard-wired, and does not feature the IP68 detachable couplings for off-site maintenance. All aspects of the luminiare itself are still field serviceable.

Connection Type '85' for LS6052-K Pre-Installation Blockout

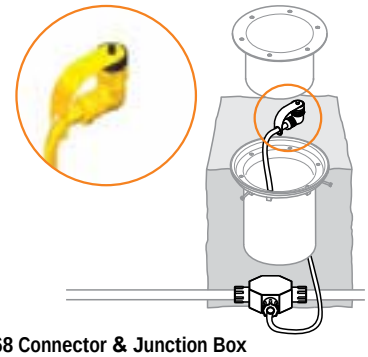

IP68 Connector & Junction Box

The luminaire is fitted with an IP68 connector, which attaches directly to the cable supplied with LS6052-K, without the use of any tools. The cable is 1.8 ft (0.56 m) in length, and is factory assembled with a 4 way junction box which remains field serviceable after installation.

Not suitable for color changing or dimmable applications.

Connection Type '82' for LS6052-K-SP Pre-Installation Blockout

Single Conduit Entry 0.5 inch NPT

For 0.5 inch conduit installation with **MicroAntiLeach™** wire entry.

c/w 6.5 ft (2.0 m) hook-up wire.

Lens Options

OptiClear™ Glass

Glass of very high optical purity and load strength. Suitable for drive-over applications.

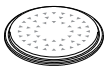

GripGlass™

OptiClear™ glass with slip reduction glazing process. Suitable for drive-over applications.

Borosilicate Glass

Ideal for general use areas. Not suitable for drive-over application.

Cover Options for Pre-Installation Blockout

Flush covers for pre-installation use special seals and support bushes to ensure static loads up to 9 260 lb (4 200 kg) are properly supported. In order to achieve this drive-over rating, **OptiClear™** or **GripGlass™** must be used.

Pre-Installation Blockout Round Flush Cover

- SS316: Polished
- SS316: Brushed
- Brass: Polished
- Brass: Brushed

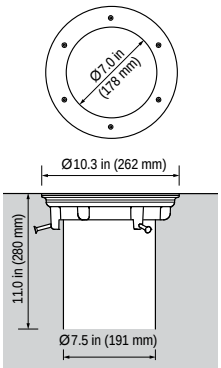

PICO PUBLIC LIBRARY FEBRUARY 21, 2012 LIGHTING CATALOG PAGE

THE LIGHTING DESIGN ALLIANCE, INC.
LOS ANGELES
2830 TEMPLE AVENUE
LONG BEACH, CA 90806-2213
T: 562.989.3843
F: 562.989.3847
www.LightingDesignAlliance.com

Product Code	Lamp Code	Lens Code	Cover Code	Cable Entry Code	Optical System Code	Body Depth Code	Control Gear & Wire Entry Code	Supply Voltage Code
LS853LED						29	Q	

LAMP

Description	Wattage	Color	Code
LED	20 W	White (4 300 K typ.)	20W4
		Warm white (2 900 K typ.)	20H6
		Blue (470 nm)	20B4
		RGB	20M4

OPTICAL SYSTEM

Description	Beam		Code
Adjustable	Narrow	14°	N
Adjustable	Narrow Medium	25°	NM
Adjustable	Medium	30°	M
Adjustable	Linear Horizontal	40° x 20°	LH
Adjustable	Linear Vertical	20° x 40°	LV

NOTE: See beam orientation diagram.

LENS

Description		Code
OptiClear™	Very high optical purity and load strength	A [1]
GripGlass™	OptiClear™ with slip reduction glazing process	G [1]
Borosilicate Glass	Ideal for general use areas	X [2]

[1] Suitable for drive-over.
[2] Not suitable for drive-over.

BODY DEPTH

Description	Depth	Code
Suits pre-install kit	11.0 inches (280 mm)	29

NOTE: For other body depths consult factory.

WIRE ENTRY LOCATION

Location	Code
Bottom	Q

SUPPLY VOLTAGE

Voltage	Code
120V 60 Hz	4 [1]
277V 60 Hz	9 [1]
12 V 60 Hz or 12-24 V DC	13 [2]

[1] Not available for RGB.
[2] For appropriate transformer sizing refer to page 54 - 55 of the Lumascape LED catalog.

COVER

Description	Material	Finish	Code
Round Flush Cover	Stainless steel	Polished	M
		Brushed	N
	Brass	Polished	L
		Brushed	K

CONNECTION TYPE

Description	Code
IP68 Connector & Junction Box	85 [1]
Single Conduit Entry 0.5 inch NPT	82 [2]

[1] Not suitable for color changing or dimmable applications. *LS6052-K required - order separately.*
[2] *LS6052-K-SP required - order separately.*

LS853LED Accessories

Stacking and order of accessories

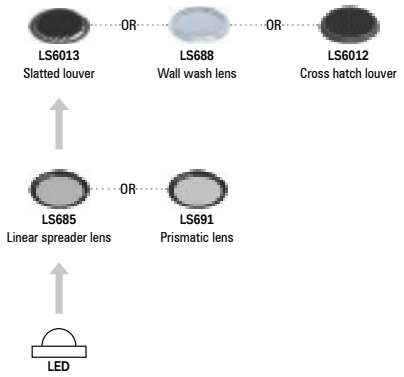

Other accessory stacking options may be available - consult factory

THE LIGHTING DESIGN ALLIANCE, INC.
LOS ANGELES
2830 TEMPLE AVENUE
LONG BEACH, CA 90806-2213
T: 562.989.3843
F: 562.989.3847
www.LightingDesignAlliance.com

LUMIÈRE®

LIGHTING DESIGN ALLIANCE

DESCRIPTION

Cambria 203 is an ultra-compact low voltage LED and halogen MR16 fixture. It is available with a fully adjustable side swivel stem (203, 203-FL), an adjustable center rear swivel (203-CRS) or a stationary rear flush mount (203-FM). Various lenses, louvers and color or dichroic filters can be combined - up to three at once - to create multiple lighting effects. Lumiere's exclusive Siphon Protection System (S.P.S.) prevents water from siphoning into the fixture through it's own lead wires.

Catalog #		Type
Project		
Comments		Date
Prepared by		

SPECIFICATION FEATURES

A ... Material

Housing, hood and mounting stem are precision-machined from corrosion-resistant billet stock 6061-T6 aluminum, C360 brass, C932 bronze, C110 copper or 303/304 stainless steel.

B ... Finish

Fixtures constructed from 6061-T6 aluminum are double protected by a chemical film undercoating and polyester powdercoat paint finish, surpassing the rigorous demands of the outdoor environment. A variety of standard colors are available.

C ... Brass, Bronze, Copper or Stainless Steel

Fixtures constructed from brass, bronze, copper or stainless steel are left unpainted to reveal the natural beauty of the material. Brass, bronze and copper will patina naturally over time.

D ... Hood

Hood is removable for easy relamping and accepts up to three internal accessories at once (lenses, louvers, filters) to achieve multiple lighting effects. Model 203, 203-CRS & 203-FM: Weep holes prevent water and mineral stains from collecting on the lens, even in the straight-up position. Model 203-FL: The flush lens design reduces fixture length, minimizes debris collection and prevents water and mineral stains from collecting on the lens.

E ... Gasket

Housing and hood are sealed with a high temperature silicone o-ring gasket to prevent water intrusion.

F ... Lens

Tempered glass lens, factory sealed with high temperature adhesive to prevent water intrusion and breakage due to thermal shock.

G ... Mounting Stem

Model 203 and 203-FL include a fully adjustable side-mounted swivel stem, providing 340° tilt and 360° rotation for easy aiming. Center rear swivel (203-CRS) or stationary rear flush mount (203-FM) models are also available. All models include 1/2" NPS threaded male fitting. Stainless steel aim-locking mechanisms are standard (not available on 203-FM). Lumiere's exclusive Siphon Protection System (S.P.S.) prevents water from siphoning into the fixture through its own lead wires.

H ... Hardware

Stainless steel hardware is standard to provide maximum corrosion-resistance.

I ... Socket

Ceramic socket with 250°C Teflon coated lead wires and GU5.3 bi-pin base.

J ... Electrical

Remote 12V transformer required (not included). Transformers used in conjunction with LED's must be magnetic only, not electronic. Available from Lumiere as an accessory - see the Accessories & Technical Data section of the catalog for details. NOTE: initial power draw on LED equipped fixtures can be up to 20 watts in cold weather. When sizing transformer use 20 watts per LED fixture. Nominal power draw after start up is 12 watts. Also, LEDs are more voltage sensative than standard halogen MR16 lamps. The LED module is designed to operate between 10 and 13 volts. Any less or more voltage can cause premature failures. Lumiere recommends the use of a surge protector with all remote tranformers feeding LEDs. Lumiere's 10kV fuse and MOV module can be ordered separately under catalog # LEDSURGE.

K ... Lamp

Halogen lamp not included. Available from Lumiere as an accessory - see reverse side for details and catalog logic. Due to the onboard thermal feedback control circuitry, LED modules are non-dimmable. LED modules are included and are available in three color temperatures (warm, neutral and cool) and three distributions (spot, narrow and flood). Both color temperature and distribution must be specified when ordering - see reverse side for details and catalog logic.

L ... Labels & Aprovals

UL and cUL listed, standard wet label. IP65 rated. Manufactured to ISO 9001-2000 Quality Systems Standard. IBEW union made. Approved by New York City Department of Buildings, Bureau of Electrical Control for use in NYC, NY.

M ... Warranty

Lumiere warrants it's fixtures against defects in materials & workmanship for three (3) years. Auxiliary equipment such as transformers, ballasts and lamps carry the original manufacturer's warranty.

Cambria 203
Side Swivel Stem

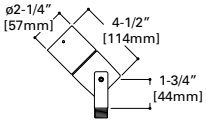

Cambria 203-CRS
Center Rear Swivel

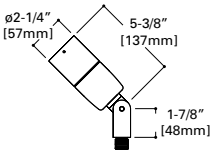

Cambria 203-FM
Flush Mount

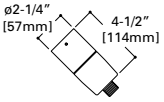

Cambria 203-FL
Flush Lens /
Side Swivel Mount

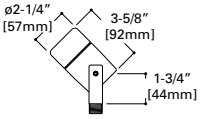

CAMBRIA 203

12W LED

12V 50W MR16

Accent / Flood

IP65

COOPER Lighting
www.cooperlighting.com

Specifications and Dimensions subject to change without notice.
Consult your representative for additional options and finishes.

09/23/2010

THE LIGHTING DESIGN ALLIANCE, INC.

LOS ANGELES
2830 TEMPLE AVENUE
LONG BEACH, CA 90806-2213

T: 562.989.3843
F: 562.989.3847
www.LightingDesignAlliance.com

LAMP INFORMATION

Lamp	ANSI Code	Watts	Beam Spread	CBCP	ºK	Life (hrs.)	Base	Volts
12WLEDS		12	7º	11399	3000	50000	GU5.3 bi-pin	12
12NLEDS		12	7º	13725	4300	50000	GU5.3 bi-pin	12
12CLEDS		12	7º	14657	6300	50000	GU5.3 bi-pin	12
12WLEDN		12	19º	1160	3000	50000	GU5.3 bi-pin	12
12NLEDN		12	19º	1495	4300	50000	GU5.3 bi-pin	12
12CLEDN		12	19º	1794	6300	50000	GU5.3 bi-pin	12
12WLEDW		12	25º	1066	3000	50000	GU5.3 bi-pin	12
12NLEDW		12	25º	1414	4300	50000	GU5.3 bi-pin	12
12CLEDW		12	25º	1461	6300	50000	GU5.3 bi-pin	12
50MR16 / NSP	EXT	50	12°	11000	3050	4000	GU5.3	12
50MR16 / NFL	EXZ	50	25°	3200	3050	4000	GU5.3	12
50MR16 / FL	EXN	50	40°	2000	3050	4000	GU5.3	12
50MR16 / WFL	FNV	50	60°	1200	3050	4000	GU5.3	12

Notes & Formulas:

Beam diameter is to 50% of maximum footcandles, rounded to the nearest half-foot.
Footcandle values are initial.
For halogen sources, apply appropriate light loss factors where necessary.
For LED sources, light loss factor has already been applied.
For halogen sources, bare lamp data is shown.
Consult lamp manufacturers to obtain detailed specifications for their lamps.

ORDERING INFORMATION

Series

203 = LED or MR16 Cambria Accent Fixture Side Swivel Stem

203-CRS = LED or MR16 Cambria Accent Fixture Center Rear Swivel

203-FM = LED or MR16 Cambria Accent Fixture Flush Mount

203-FL = LED or MR16 Cambria Accent Fixture Flush Lens/ Side Swivel Stem

Source

HALOGEN

50MR16 = 50W Max Halogen MR16, GU5.5Base

LED

12WLEDS = 12W Warm LED Spot Optic, GU5.3 Base

12NLEDS = 12W Neutral LED Spot Optic, GU5.3 Base

12CLEDS = 12W Cool LED Spot Optic, GU5.3 Base

12WLEDN = 12W Warm LED Narrow Optic, GU5.3 Base

12CLEDN = 12W Cool LED Narrow Optic, GU5.3 Base

12WLEDW = 12W Warm LED Wide Optic, GU5.3 Base

12NLEDW = 12W Neutral LED Wide Optic, GU5.3 Base

12CLEDSW = 12W Cool LED Wide Optic, GU5.3 Base

12NLEDN = 12W Neutral LED Narrow Optic, GU5.3 Base

Voltage

12 = 12V

Finish

Painted

BK = Black

BZ = Bronze

CS = City Silver

VE = Verde

WT = White

Premiu Material

NBR = Natural Brass

NBZ = Natural Bronze

NCP = Natural Copper

NSS = Natural Stainless Steel

Accessories

Filters

F71 = Peach Dichroic Filter, 2.00" Dia

F72 = Amber Dichroic Filter, 2.00" Dia

F73 = Green Dichroic Filter, 2.00" Dia

F74 = Medium Blue Dichroic Filter, 2.00" Dia

F75 = Yellow Dichroic Filter, 2.00" Dia

F76 = Red Dichroic Filter, 2.00" Dia

F77 = Dark Blue Dichroic Filter, 2.00" Dia

F78 = Light Blue Dichroic Filter, 2.00" Dia

F79 = Neutral Density Dichroic Filter, 2.00" Dia

F80 = Magenta Dichroic Filter, 2.00" Dia

F22 = Red Color Filter, 2.00" Dia

F33 = Blue Color Filter, 2.00" Dia

F44 = Green Color Filter, 2.00" Dia

F55 = Yellow Color Filter, 2.00" Dia

F66 = Mercury Vapor Color Filter, 2.00" Dia

Optical Lenses

LSL = Linear Spread Lens (elongate standard beam spread), 2.00" Diameter

DIF = Diffused Lens (provide even illumination), 2.00" Diameter

OSL = Overall Spread Lens (increase beam spread), 2,00" Diameter

Optical Louver

LVR = 45° Hex Cell Louver (reduce glare), 2.00" Diameter

Sample Number: 203-12WLEDN-12-BK

Notes:

- lamp not included
- 12V remote transformer required - not included
- See ACCESSORIES & TECHNICAL DATA section of the Lumiere catalog for Low Voltage Cable & Transformers
- Consult your Cooper Lighting representative for additional options and finishes

LAMPS

MR16

EZX = 20W MR16 GU5.3 Bi-Pin Very Narrow Spot

BAB = 20W MR16 GU5.3 Bi-Pin Flood

FRA = 35W MR16 GU5.3 Bi-Pin Spot

EXT = 50W MR16 GU5.3 Bi-Pin Narrow Spot

EXN = 50W MR16 GU5.3 Bi-Pin Flood

ESX = 20W MR16 GU5.3 Bi-Pin Narrow Spot

FRB = 35W MR16 GU5.3 Bi-Pin Narrow Spot

FMW = 35W MR16 GU5.3 Bi-Pin Flood

EXZ = 50W MR16 GU5.3 Bi-Pin Narrow Flood

FNV = 50W MR16 GU5.3 Bi-Pin Very Wide Flood

COOPER Lighting
www.cooperlighting.com

Specifications and Dimensions subject to change without notice.

Lumiere • Customer First Center • 1121 Highway 74 South • Peachtree City, GA 30269 • TEL 770.486.4800 • FAX 770.486.4801

09/23/2010

SPECIFICATION SHEET

lumenbeam™

MEDIUM
WHITE & STATIC COLORS

LIGHTING DESIGN ALLIANCE

Client: _____

Project name: _____

Order # _____

Type: _____ Qty: _____

FEATURES AND BENEFITS

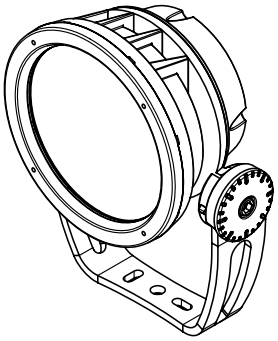

Physical :

- Low copper content high pressure die-cast aluminum housing
- Heavy aluminum formed yoke (standard yoke included)
- Stainless steel hardware
- Silicone sealing devices
- Clear tempered glass
- Dual chamber design for heat management and ease of maintenance
- Electro-statically applied polyester powder coat finish
- 3.05 kg / 6.7 lbs
- IP66
- EPA: Front = 0.46 sq. ft. Side = 0.37 sq. ft.

Performance :

- Minimum 1fc (10.7 lux) @ 238 feet (72.5m) distance (4000K, 6° optic)
- 1,400 delivered lumens and 56,521 candelas at nadir (4000K, 6° optic)
- 6°, 10°, 20° or 40°, Elliptical distribution on 10° and 40° optics
- Lumen maintenance L70 @ 25°C - 120,000 hrs
- Lumen measurements comply with LM - 79 - 08 standard
- Operating temperatures : -25°C to 50°C

Electrical :

- Line voltage luminaire for 120 to 277V
- Power and data in 1 cable, 3ft cord (#16-5)
- 27 watts
- 0-10 volt, DMX or DALI dimming options

Wiring detail

WIRE COLOR	*USE*
GREEN	*GROUND*
WHITE	*NEUTRAL*
BLACK	*LIVE 120-277V*
RED	*0-10V / DATA +*
ORANGE	*0-10V / DATA -*

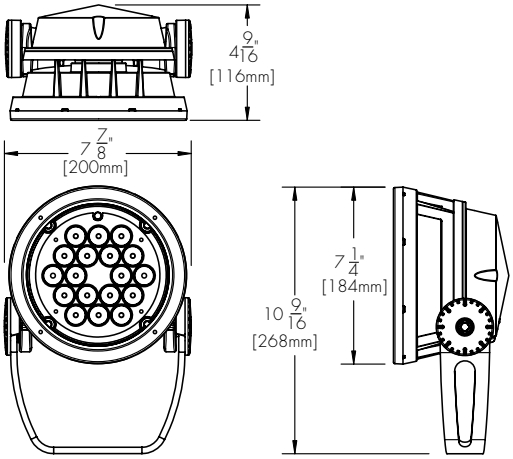

Standard Yoke (as shown, included)

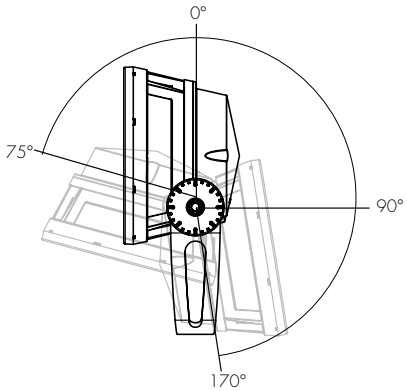

Standard Yoke Mounting
Adjustable pivot limits

5 year warranty

1/11

Lumenpulse, 1751 Richardson, Suite 1505, Montreal (Quebec) Canada H3K 1G6 1.877.937.3003 P. 514.937.3003 F. 514.937.6289
info@lumenpulse.com **www.lumenpulse.com**
© Copyright Lumenpulse 2011

2011.12.12

Lumenpulse reserves the right to make changes to this product at any time without prior notice

lumenpulse™

THE LIGHTING DESIGN ALLIANCE, INC.

LOS ANGELES
2830 TEMPLE AVENUE
LONG BEACH, CA 90806-2213

T: 562.989.3843
F: 562.989.3847
www.LightingDesignAlliance.com

TYPE
JD2

SPECIFICATION SHEET

lumenbeam™

MEDIUM
WHITE & STATIC COLORS

Client: _____

Project name: _____

Order # _____

Type: _____ Qty: _____

FEATURES AND BENEFITS

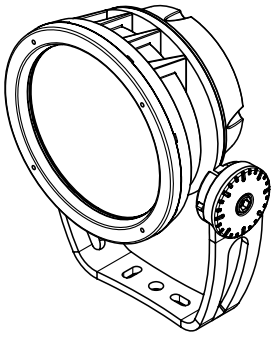

Physical :

- Low copper content high pressure die-cast aluminum housing
- Heavy aluminum formed yoke (standard yoke included)
- Stainless steel hardware
- Silicone sealing devices
- Clear tempered glass
- Dual chamber design for heat management and ease of maintenance
- Electro-statically applied polyester powder coat finish
- 3.05 kg / 6.7 lbs
- IP66
- EPA: Front = 0.46 sq. ft. Side = 0.37 sq. ft.

Performance :

- Minimum 1fc (10.7 lux) @ 238 feet (72.5m) distance (4000K, 6° optic)
- 1,400 delivered lumens and 56,521 candelas at nadir (4000K, 6° optic)
- 6°, 10°, 20° or 40°, Elliptical distribution on 10° and 40° optics
- Lumen maintenance L70 @ 25°C - 120,000 hrs
- Lumen measurements comply with LM - 79 - 08 standard
- Operating temperatures : -25°C to 50°C

Electrical :

- Line voltage luminaire for 120 to 277V
- Power and data in 1 cable, 3ft cord (#16-5)
- 27 watts
- 0-10 volt, DMX or DALI dimming options

Wiring detail

WIRE COLOR	*USE*
GREEN	*GROUND*
WHITE	*NEUTRAL*
BLACK	*LIVE 120-277V*
RED	*0-10V / DATA +*
ORANGE	*0-10V / DATA -*

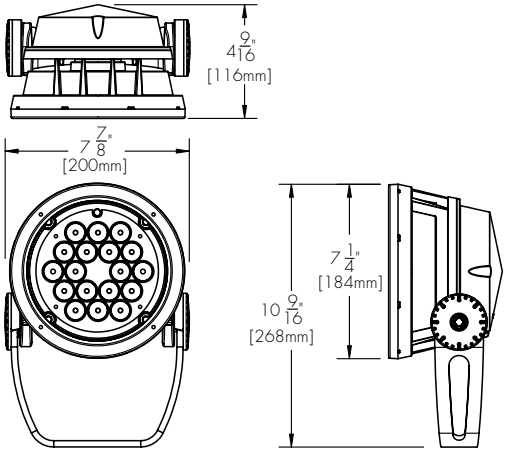

Standard Yoke (as shown, included)

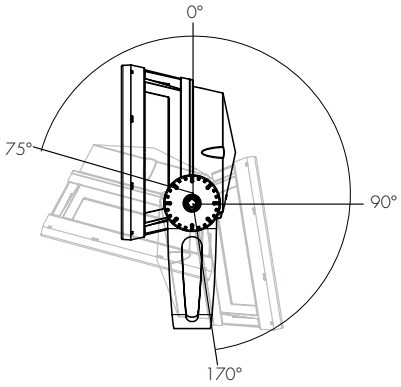

Standard Yoke Mounting
Adjustable pivot limits

5 year warranty

1/11

2011.12.12
EM - R12

Lumenpulse, 1751 Richardson, Suite 1505, Montreal (Quebec) Canada H3K 1G6 1.877.937.3003 P. 514.937.3003 F. 514.937.6289
info@lumenpulse.com **www.lumenpulse.com**
© Copyright Lumenpulse 2011

Lumenpulse reserves the right to make changes to this product at any time without prior notice and such modification shall be effective immediately.

lumenpulse™
Sustainable architectural LED lighting systems

THE LIGHTING DESIGN ALLIANCE, INC.

LOS ANGELES
2830 TEMPLE AVENUE
LONG BEACH, CA 90806-2213

T: 562.989.3843
F: 562.989.3847
www.LightingDesignAlliance.com

MOUNTING OPTIONS

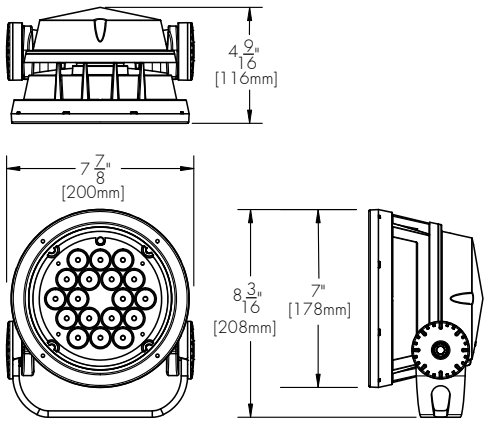

SY
Short Yoke Mounting

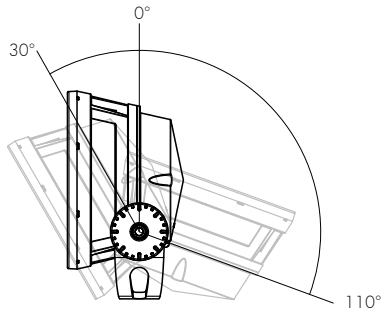

Short Yoke mounting
adjustable pivot limits

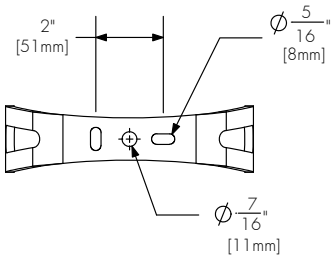

Standard and Short Yoke mounting
holes pattern

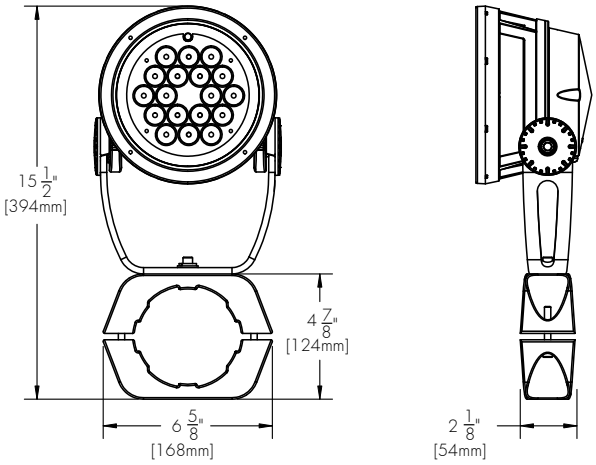

PM
Round Pole Mounting Accessory
*Consult factory for square pole section

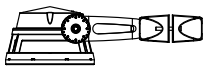

PM4-1, PM4.5-1, PM5-1
Round Pole Mounting accessory
single fixture

PM4-2, PM4.5-2, PM5-2
Round Pole Mounting accessory
twin fixtures

When **PM4-2, PM4.5-2 or PM5-2** are specified, one bracket assembly is supplied per 2 fixtures unles: otherwise specified.

Lumenpulse, 1751 Richardson, Suite 1505, Montreal (Quebec) Canada H3K 1G6 1.877.937.3003 P. 514.937.3003 F. 514.937.6289
info@lumenpulse.com **www.lumenpulse.com**
© Copyright Lumenpulse 2011

Lumenpulse reserves the right to make changes to this product at any time without prior notice and such modification shall be effective immediately.

lumenpulse™
Sustainable architectural LED lighting systems

THE LIGHTING DESIGN ALLIANCE, INC.

LOS ANGELES
2830 TEMPLE AVENUE
LONG BEACH, CA 90806-2213

T: 562.989.3843
F: 562.989.3847
www.LightingDesignAlliance.com

PM Series

Decorative, Vetro Pendant CFL & INC

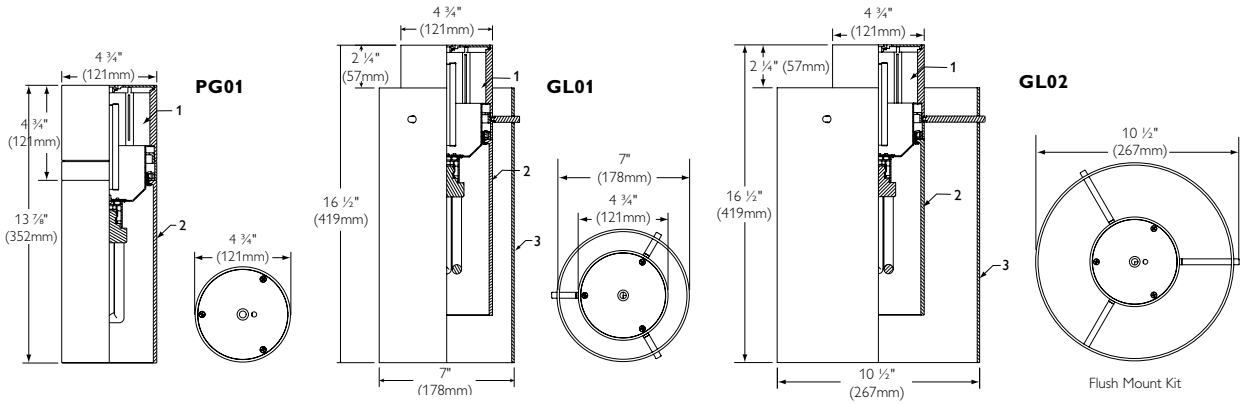

*2-wire neutral connection required at dimming control.

Ordering Information: Complete fixture consists of powerhead + inner diffuser + outer glass/acrylic + suspension kit. Each sold separately (ie **PM32SA** + **PG01** + **GL01** + **SK01**).

Powerhead	Inner Diffuser	Outer Glass/Acrylic	Suspension Kit	Lamp	Volts
PM32SA	**PG01 or PA01**	**GL02, GL02A, GL01, or GL01A**	See suspensions below	CFL, 26/32	**120/277V**
PM32MX1SA				Mark X Dimming 26/32W	**120V**
PM32MX2SA				Mark X Dimming 26/32W	**227V**
PM150SA*	**PG01 only**	**GL01 or GL02 only**		T-4 Mini-Can 150W	**120V**

Must order Powerhead and Glass separately. Suspension Kit must be ordered separately. Spec ID is for reference only. *DO NOT USE with acrylic accessories.

Suspension Kits:

Catalog No.	Finish	Description
SK01	Satin aluminum	Clear metallic straight Cord/Cable, 120" Length, (10') with canopy
SK02	Satin aluminum	Clear metallic straight Cord/Cable, 300" Length, (25') with canopy
ST01	Satin aluminum	36" Length 3/8" Stem with canopy
ST02	Satin aluminum	60" Length 3/8" Stem with canopy
CTC	Satin aluminum	Close To Ceiling Kit with canopy
TM01	Satin aluminum	Silver Track Mounting Kit with clear metallic straight Cord/Cable, 120" Length, (10') (120V only)
SMK	Satin aluminum	Flush Mounting Kit

Mounting Options

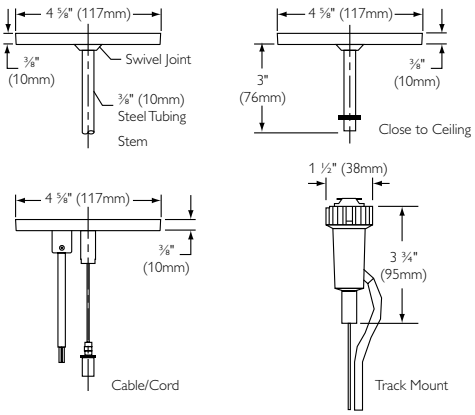

Job Information **Type:**

Job Name:

Cat. No.:

Notes:

PHILIPS LIGHTOLIER

THE LIGHTING DESIGN ALLIANCE, INC.
LOS ANGELES
2830 TEMPLE AVENUE
LONG BEACH, CA 90806-2213
T: 562.989.3843
F: 562.989.3847
www.LightingDesignAlliance.com

2" Wide 1 3/8" Deep, 22", 34", 46" or 92" Lengths, 1 or 2 Lamp, T5

Features

- Only 2" wide.
- Utilizes compact, high efficency, T5 or T5HO lamps.
- Fully enclosed wiring.
- Optional white or specular, symmetric and assymetric reflector.
- Convenience outlet and switch K.O.s provided
- Push through lamp holders with rotor for secure lamp retention.
- Optional hangers and wires guards.

Dimensions

A: 9/16"(14mm) K.O.
B: 7/8"(22mm) K.O.
C: CARRIAGE SLOT

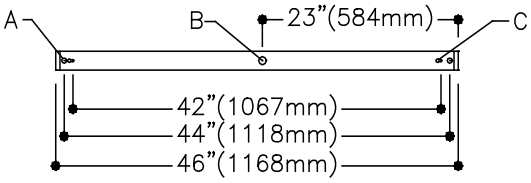

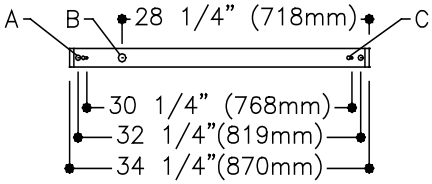

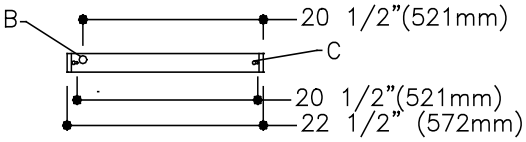

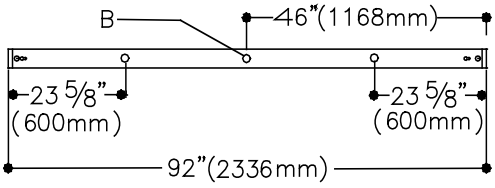

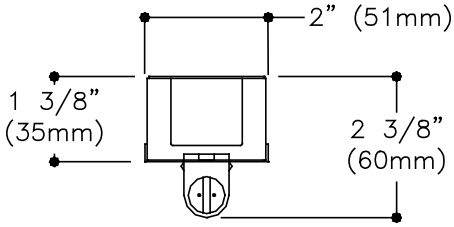

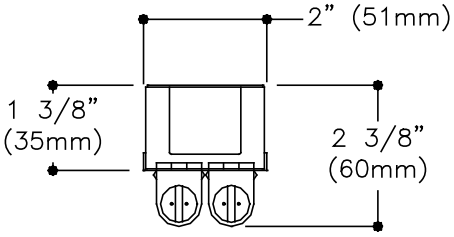

Job Information	Type:
Job Name:	
Cat. No.:	
Lamp(s):	
Volts/Ballast:	

Lightolier a Genlyte Thomas Company www.lightolier.com
Technical Information: (978) 657-7600 • Fax (978) 658-0595
631 Airport Road, Fall River, MA 02720 • (508) 679-8131 • Fax (508) 674-4710
We reserve the right to change details of design, materials and finish.
Copyright 2002 Lightolier
Section 3A/Folio H120-17

5/03

THE LIGHTING DESIGN ALLIANCE, INC.
LOS ANGELES
2830 TEMPLE AVENUE
LONG BEACH, CA 90806-2213
T: 562.989.3843
F: 562.989.3847
www.LightingDesignAlliance.com

Photometry

Model No. SV4S228120PG

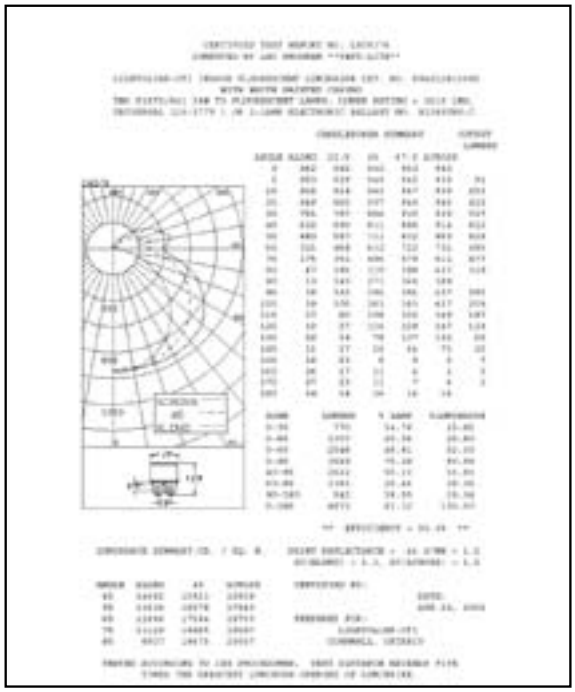

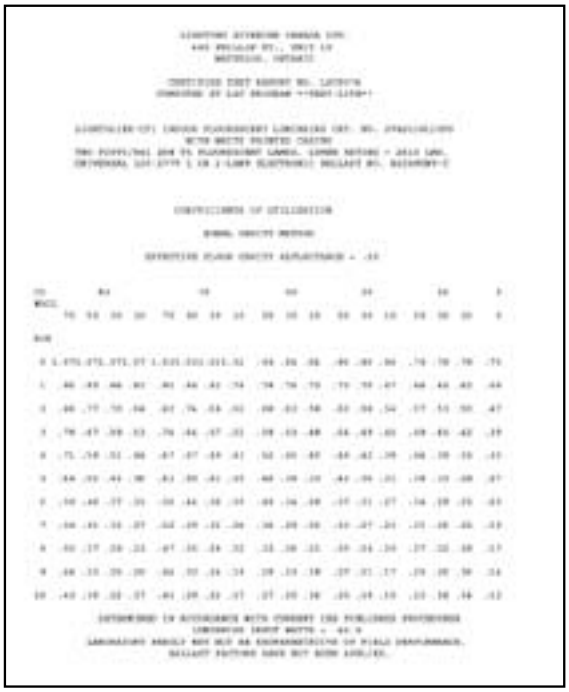

Ordering Information

Explanation of Catalog Number. Example: SV4S228120PG

SV

Strip
Narrow Strip T5
2" wide x 1 3/8" deep channel

Nominal Fixture Length:
2 = Nominal 22"
3 = Nominal 34"
4 = Nominal 46"
8 = Nominal 92"

Lamp Configuration:
S = Single Fixture
D = Double Fixture Master/Satellite Fixture and Quick Connect

Lamp Quantity:
1 or 2*

Lamp Type:
(Nominal 22")
14 = 14W T5
24 = 24W T5 HO
(Nominal 34")
21= 21W T5
39 = 39W T5 HO
(Nominal 46")
28 = 28W T5
54 = 54W T5 HO

Voltage
UNV = 120/277V
120 = 120V
277 = 277V

Ballast Type
PG = Electronic T5 Program Start, Less than 10 THD
PI = Electronic T5 Instant Start, <10 THD (14W, 21W or 28W only, no UNV voltage)
PF = LOLT5 Power Spec Dimming (1-Lamp 54 watt only)
PJ = 1-4LT Electronic T5 instant start, less than 10 THD (54 watt only)

Options:

* 92" Fixture have Lamps in tandem
ie 1 = 1 Lamp in tandem (2 Lamps total)
2 = 2 Lamp in tandem (4 Lamps total)

Options & Accessories

Stem and Canopy Sets: Suspend luminaire 12", 18", 24", 36", or 48" from surface. (Two per luminaire is recommended. For 34" and 46"**SV** Strip only.) Catalog number: **SV5F12** (12"); **SV5F18** (18"); **SV5F24** (24"); **SV5F36** (36"); **SV5F48** (48").
Chain Hanging Kit: Includes two 5' heavy duty link chains with sturdy "V" hook for fixture suspension. (34" and 46" Strip only.) Catalog number: **EE9HC**
Wire Guard: White wire guard. Catalog number: For SV Strip T5 34"; **SV5GXW3.** For SV Strip T5 46"; **SV5GXW4.**
Reflector: Consult specification sheet (folio H120-22 & H120-20).
Radio Interference Filter: 120, 277 or UNV volt, 50 or 60 Hz. Suffix: **R**
Ballast Options: For other ballast options, consult factory

Specifications

Materials: Chassis parts are die-formed heavy gauge cold rolled steel,1-3/8" deep x 2" channel width.

Specifications (continued)

Finish: Chassis exterior - phosphate undercoating, baked white acrylic matte high reflectance paint finish.
Electrical: HPF, thermally protected class "P" ballast. If K.O.s are within 3" of ballast use wire suitable for at least 90°.
Labels: Listed by

Job Information	**Type:**

Lightolier a Genlyte Thomas Company www.lightolier.com
Technical Information: (978) 657-7600 • Fax (978) 658-0595
631 Airport Road, Fall River, MA 02720 • (508) 679-8131 • Fax (508) 674-4710
We reserve the right to change details of design, materials and finish.
Copyright 2002 Lightolier
Section 3A/Folio H120-17

THE LIGHTING DESIGN ALLIANCE, INC.
LOS ANGELES
2830 TEMPLE AVENUE
LONG BEACH, CA 90806-2213
T: 562.989.3843
F: 562.989.3847
www.LightingDesignAlliance.com

Calculite LED Frame-In Kit **C6L15/CUL15**

1500 Lumen, 6" Aperture Remote Phosphor LED

New Construction Frames

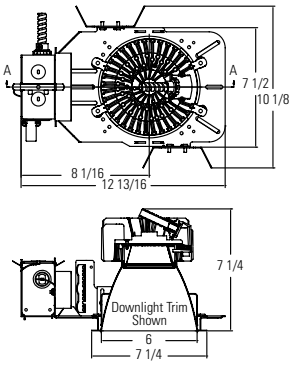

Remodeler Frames

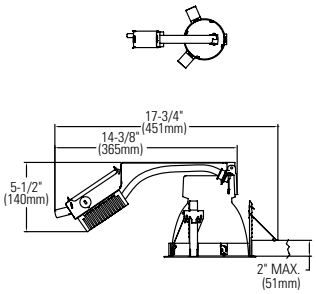

Retrofit Frames

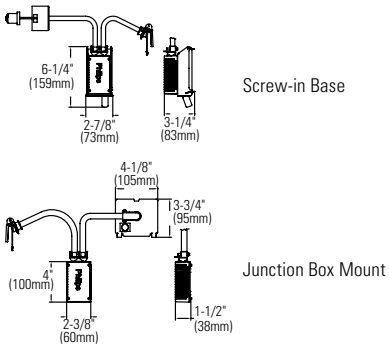

Ordering Guide: Frame-in Kits

Frame-in Kit Series	Installation Options	Input Voltage	Options
C6L15 (1500 Lumen)	**N** (New construction) **R** (Remodeler)	**1** (120V) **2** (277V)	**Blank** (0-10 volt dimming) **EM** (Emergency)
CUL15 (1500 Lumen)	**J** (J-box mount retrofit) **S** (Screw-in base retrofit (120V only))	**1** (120V) **2** (277V)	**Blank** (0-10 volt dimming)

Example: C6L15N1EM

Features

Ceiling Cutout: 6 9/16" (167mm)
Depth (including Light Engine): See Light Engine specification sheet for details.
Power Connection: Attaches to light engine via push-in connector (on frame). Removable cover provides access.
Junction Box: UL listed for 8 No. 12 AWG, 90°C through branch circuit connectors. Allows inspection from below.
Thermal Protector: Meets NEC & UL requirements. Do not install insulation above nor within 3" of any part of luminaire.

New Construction Frame:
Mounting Frame: Galvanized stamped steel for dry or plaster ceilings.
Vertical Adjustment: Light engine adjusts in frame below ceilings up to 1 1/8".
Mounting Brackets: Galvanized Steel. Adjustable through aperture. Use 3/4" or 1 1/2" lathing channel, 1/2" EMT or optional mounting bars.

Remodeler Frame:
Power Pack: Swivel junction box for tight plenum spaces. Snap-off covers permits wiring from top.
Spring Holder: Galvanized steel. Accepts up to 2 1/2" (64mm) ceiling thickness.

Retrofit Frame:
Capability: Converts 6" (153mm) or 7" (178mm) Lightolier incandescent frame-in kit without additional wiring using existing Calculite E26 base.
Socket Cup Support: Spun steel. Holds Calculite incandescent socket cup.
Socket Extender: Phenolic E26 base. Connect to existing lampholder.

Electrical

Electronic Power Supply: 120 or 277V, 50/60Hz, encased, overload and short circuit protected, thermal regulation to protect against overheating, sound rating "A", -20°C minimum starting temperature, 70°C maximum operating temperature, dimmable with 0-10V dimmer. Dimming compatibility: See LED-DIM specification sheet.

Electrical (continued)

Input Voltage	Input Frequency	Input Current	LED Drive Current	Input Power	LED Power	THD	Power Factor
120V	50/60Hz	0.25	350mA	27W	23.1W	<1%	>0.9
277V	50/60Hz	0.11	350mA	27W	23.1W	<1%	>0.9

Rated Life: 100,000 hours

Options and Accessories

Dimming Capability: 0-10V. See LED-DIM specification sheet
Emergency Capability (Integral): Add "EM" suffix. See LED-EM spec sheet.
Emergency Capability (Inverter): See LED-LMI specification sheet
Sloped Ceilings: See specification sheet SCA.
Mounting Bars: 1950-18" Set of (2)
1951-27" Set of (2)
T-Bar Anchor Clips: 1956-Set of (4), for use with above

Labels

UL, cUL, I.B.E.W.
5 Year Warranty

Job Information **Type:**

Job Name:

Cat. No.:

Lamp(s):

Notes:

631 Airport Road, Fall River, MA 02720 • (508) 679-8131 • Fax (508) 674-4710
We reserve the right to change details of design, materials and finish.
www.lightolier.com © 2010 Philips Group • C0710

PHILIPS
LIGHTOLIER®

THE LIGHTING DESIGN ALLIANCE, INC.
LOS ANGELES
2830 TEMPLE AVENUE
LONG BEACH, CA 90806-2213
T: 562.989.3843
F: 562.989.3847
www.LightingDesignAlliance.com

C2L04

Calculite 1.75" Aperture, 400 Lumen LED

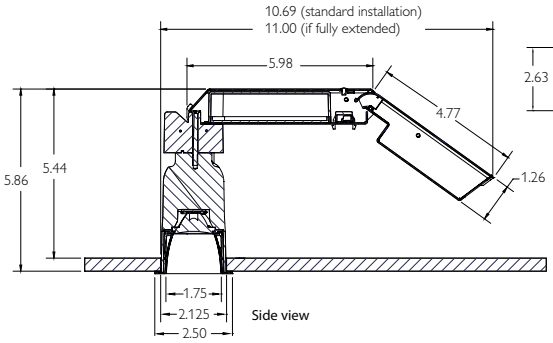

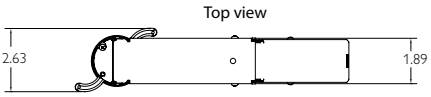

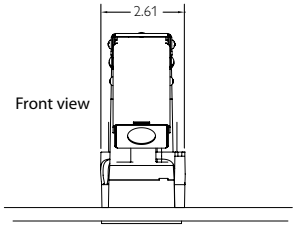

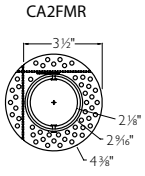

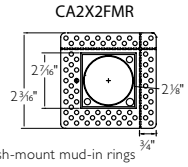

Flush-mount mud-in rings recommended for gypsum applications.

Ordering Guide: Frame-in Kits

Frame-in Kit Series	Lumen Package (nominal)	Style	Color Temperature	Beam Spread	Installation Style[2]	Input Voltage
C2L	**04** (400 Lumens)	**DL** (Downlight flanged) **DLFT** (Downlight flush-mount)[1]	**30K** (3000K)	**12** (12 degrees) **17** (17 degrees) **25** (25 degrees) **38** (38 degrees)	**R** (install-from-below)	**1** (120V)
		[1]requires "FT" series reflectors				

Ordering Guide: Reflectors

Reflector Series	Style	Finish	Flange
C2L (Round)	**DL** (Downlight-50° cutoff) **DLLS** (Downlight with linear spread lens-75° cutoff) **LW** (Lensed Wall Washer)[3,4]	**BK** (Black) **CCD** (Comfort Clear Diffuse) **CCZ** (Champagne Bronze) **WH** (Painted White)	**P** (aperture-matching) **FT** (Flush mount)*
C2X2L (Square)	**DL** (Downlight-50° cutoff) **LW** (Lensed Wall Washer)[3]	**BK** (Black) **WH** (Painted White)	**P** (Aperture-matching) **FT** (Flush-mount)* *requires "FT" series frame-in kit
	[3]17° beam spread recommended [4]18" max installation from vertical surface recommended		

Job Information **Type:**

Job Name:

Cat. No.:

Notes:

PHILIPS LIGHTOLIER

THE LIGHTING DESIGN ALLIANCE, INC.

LOS ANGELES
2830 TEMPLE AVENUE
LONG BEACH, CA 90806-2213

T: 562.989.3843
F: 562.989.3847
www.LightingDesignAlliance.com

C2L04

Calculite 1.75" Aperture, 400 Lumen LED

Features

Aperture: 1.75" (44 mm) I.D., 2.50" (63mm) O.D.
Input Wattage: 11W max. (C2L04)
Fixture Output: Aluminum. Provides 50° cutoff to source & source image. Self-flanged.
Beam Spread options:

Beam Spread	Spacing Criterion	Delivered Lumens	Efficacy	CBCP
12°	0.2	328 lm	29.8 lm/w	5099
17°	0.3	412 lm	37.3 lm/w	3282
25°	0.4	382 lm	36.0 lm/w	1995
38°	0.6	377 lm	34.9 lm/w	936

Reflector Cone: Aluminum. Provides 50° cutoff to source & source image. Twist & lock installation within frame-in kit ensures snug fit to ceiling.

Technology

Array: 4-chip LED array featuring 2-step SDCM binning control
Photometric Performance: Tested in accordance to IESNA LM-79-2008
Color Consistency: 2 SDCM (max.)
Spectral Power Distribution:

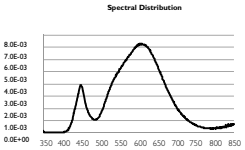

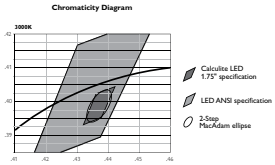

Color Rendering Index: 80 min, 82 typical

Ra	R1	R2	R3	R4	R5	R6	R7	R8	R9
81.0	80.2	87.1	91.0	78.9	78.3	81.0	85.6	66.2	21.3

R10	R11	R12	R13	R14
67.7	74.9	62.1	81.4	94.2

Dimming Capability: ELV dims to nominal 10% lumen output. See LED-DIM specification sheet for dimming system compatability.
Emergency Capability (Inverter): Yes.
See LED-LMI specification sheet

Rated Life

LED Array: 50,000 hours at 70% lumen maintenance (L70, B50). Based on IESNA LM-80-2008.
Driver: 50,000 hours

Features (continued)

Reflector Flange: Thickness: 0.09" (2.4 mm). Width (flanged) 0.37" (9.5 mm). Width "flush-mount) 0.19" (4.8 mm)
Required Depth: 5.91" (150 mm). 5.5" plenum depth required for Non-IC installation. see above for fixture dimensions
Ceiling Cutout: 2.125" (54mm)
Installation: Hinged design allows fixture to be installed from below ceiling. Two screws actuate pivoting installation arms. Vertical installation only (as shown in above drawings).
Thick Ceiling Capability: 3/8" - 2".
Optical Accessories: One (1) accessory as defined in "Accessories-Optical" below. Accessories install securely to top of reflector housing. Proper positioning ensured via offset die cut.
Field Accessibility: LED array, beam spreads (optics) and driver are field interchangeable/replaceable

Electrical

Power connection: Integral connection between driver and LED array
Junction Box: UL listed for 6 No 12 AWG, 90°C through branch circuit connectors. Allows inspection from below. Compatible with 2-1 conduit connector for daisy chaining.
Minimum Starting Temperature: -20°C
Maximum Operating Temperature: 60°C
Input Voltage: 120V
Input Frequency: 60Hz
Input Current: .09A
LED Drive Current: 670mA
Input Power: 11W
LED Power: 9.1W
THD: <20%
Power Factor: >0.9
FCC Rating: Class A, Class B pending

Labels

UL, cUL, I.B.E.W
17°, 25° & 38° beams suitable for wet location
12° beam suitable for damp location 5 year warranty

Job Information	Type:

PHILIPS LIGHTOLIER

THE LIGHTING DESIGN ALLIANCE, INC.
LOS ANGELES
2830 TEMPLE AVENUE
LONG BEACH, CA 90806-2213
T: 562.989.3843
F: 562.989.3847
www.LightingDesignAlliance.com

C2L04

Calculite 1.75" Aperture, 400 Lumen LED

Ordering Guide: Accessories

Accessories-Optical	Lumen Package (nominal)
CA2DF2	2 degree clear diffusion film*
CA2DF85	85 degree frosted diffusion film*
CA2OPF	Opal 2700K warming / frosted diffusion film*
	* actual diffusion depends on selected beam spread

To minimize accessory thickness and thus maximize optical performance, microstructure lenses are utilized in lieu of traditional glass lenses.

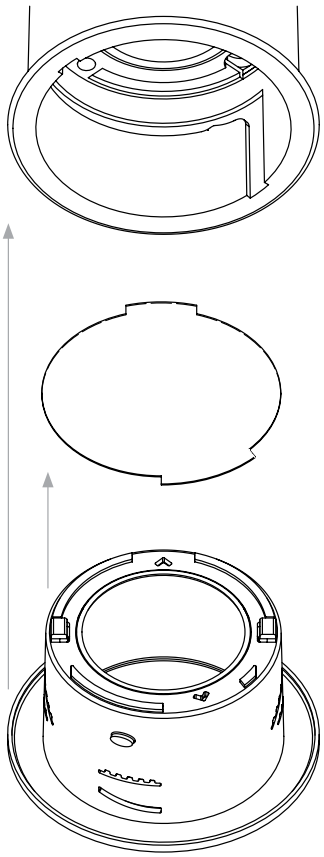

Reflector can be rotated 90° to ensure proper alignment. Friction-fit design maintains installation integrity.

For wall washer & linear spread options, lenses are factory-assembled into specified reflector.

Accessories are keyed to ensure proper installation.

Fixtures accept one accessory, which can be field-installed in any reflector assembly.

Durability

Calculite LED 1.75" fixtures operating temperatures are well below the recommended thermal limit of each optical accessory, eliminating lens degradation and ensuring maximum optical stability.

Job Information	**Type:**

PHILIPS LIGHTOLIER

THE LIGHTING DESIGN ALLIANCE, INC.
LOS ANGELES
2830 TEMPLE AVENUE
LONG BEACH, CA 90806-2213
T: 562.989.3843
F: 562.989.3847
www.LightingDesignAlliance.com

C2L04

Calculite 1.75" Aperture, 400 Lumen LED

Optional Installation Accessories

The standard C2L product offering is Non-IC, wet location listed* with no additional "frame-in kit" required.
Listed below are additional frame options.

C2LIC

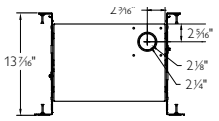

IC frame (new construction).

C2LMP

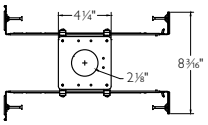

New construction mounting pan provides ability to prelocate.
wiring for easy below-ceiling access. Includes bar hangers with preset screws
which accommodate 12"-24" joist spacing. Bars also attach to T-bar ceilings.
Width: 5.5", Length (min): 13.12"

CA2FMR

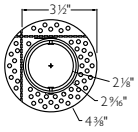

Round aperture flush-mount mud-in ring. Recommended for gypsum applications.
Perforated flange allows installation only 1.4" from vertical structure, including corners.

CA2X2FMR

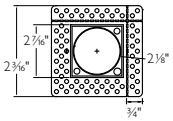

Square aperture flush-mount mud-in ring. Recommended for gypsum applications.
Perforated flange allows installation only 1.4" from vertical structure, including corners.
Square plate secures magnetically to mud-in ring. Tether included.

Ordering Guide: Installation Accessories

Accessories-Installation	Lumen Package (nominal)
CA2FMR	Round aperture flush-mount mud-in ring*
CA2X2FMR	Square aperture flush-mount mud-in ring*
C2LIC	IC frame (new construction)*
C2LMP	New construction mounting pan*
	* Recommended for specific applications.

Job Information	**Type:**

PHILIPS LIGHTOLIER

THE LIGHTING DESIGN ALLIANCE, INC.

LOS ANGELES
2830 TEMPLE AVENUE
LONG BEACH, CA 90806-2213

T: 562.989.3843
F: 562.989.3847
www.LightingDesignAlliance.com

Calculite LED Frame-In Kit **C6L15/CUL15**

1500 Lumen, 6" Aperture Remote Phosphor LED

New Construction Frames

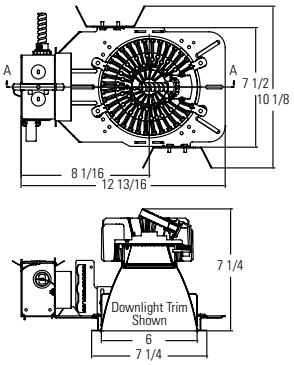

Remodeler Frames

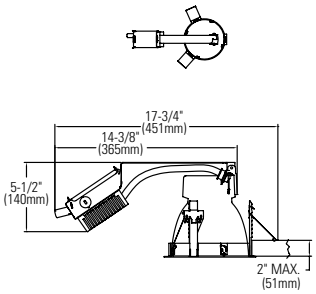

Retrofit Frames

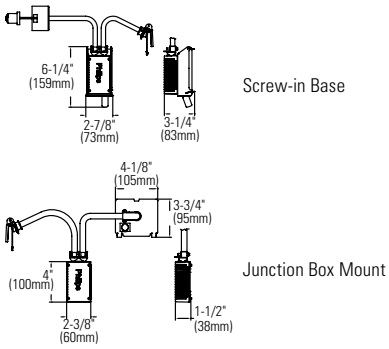

Ordering Guide: Frame-in Kits

Frame-in Kit Series	Installation Options	Input Voltage	Options
C6L15 (1500 Lumen)	**N** (New construction) **R** (Remodeler)	**1** (120V) **2** (277V)	**Blank** (0-10 volt dimming) **EM** (Emergency)
CUL15 (1500 Lumen)	**J** (J-box mount retrofit) **S** (Screw-in base retrofit (120V only))	**1** (120V) **2** (277V)	**Blank** (0-10 volt dimming)

Example: C6L15N1EM

Features

Ceiling Cutout: 6 9/16" (167mm)
Depth (including Light Engine): See Light Engine specification sheet for details.
Power Connection: Attaches to light engine via push-in connector (on frame). Removable cover provides access.
Junction Box: UL listed for 8 No. 12 AWG, 90°C through branch circuit connectors. Allows inspection from below.
Thermal Protector: Meets NEC & UL requirements. Do not install insulation above nor within 3" of any part of luminaire.

New Construction Frame:
Mounting Frame: Galvanized stamped steel for dry or plaster ceilings.
Vertical Adjustment: Light engine adjusts in frame below ceilings up to 1 1/8".
Mounting Brackets: Galvanized Steel. Adjustable through aperture. Use 3/4" or 1 1/2" lathing channel, 1/2" EMT or optional mounting bars.

Remodeler Frame:
Power Pack: Swivel junction box for tight plenum spaces. Snap-off covers permits wiring from top.
Spring Holder: Galvanized steel. Accepts up to 2 1/2" (64mm) ceiling thickness.

Retrofit Frame:
Capability: Converts 6" (153mm) or 7" (178mm) Lightolier incandescent frame-in kit without additional wiring using existing Calculite E26 base.
Socket Cup Support: Spun steel. Holds Calculite incandescent socket cup.
Socket Extender: Phenolic E26 base. Connect to existing lampholder.

Electrical

Electronic Power Supply: 120 or 277V, 50/60Hz, encased, overload and short circuit protected, thermal regulation to protect against overheating, sound rating "A", -20°C minimum starting temperature, 70°C maximum operating temperature, dimmable with 0-10V dimmer. Dimming compatibility: See LED-DIM specification sheet.

Electrical (continued)

Input Voltage	Input Frequency	Input Current	LED Drive Current	Input Power	LED Power	THD	Power Factor
120V	50/60Hz	0.25	350mA	27W	23.1W	<1%	>0.9
277V	50/60Hz	0.11	350mA	27W	23.1W	<1%	>0.9

Rated Life: 100,000 hours

Options and Accessories

Dimming Capability: 0-10V. See LED-DIM specification sheet
Emergency Capability (Integral): Add "EM" suffix. See LED-EM spec sheet.
Emergency Capability (Inverter): See LED-LMI specification sheet
Sloped Ceilings: See specification sheet SCA.
Mounting Bars: 1950-18" Set of (2)
1951-27" Set of (2)
T-Bar Anchor Clips: 1956-Set of (4), for use with above

Labels

UL, cUL, I.B.E.W.
5 Year Warranty

Job Information **Type:**

Job Name:

Cat. No.:

Lamp(s):

Notes:

631 Airport Road, Fall River, MA 02720 • (508) 679-8131 • Fax (508) 674-4710
We reserve the right to change details of design, materials and finish.
www.lightolier.com © 2010 Philips Group • C0710

PHILIPS
LIGHTOLIER®

THE LIGHTING DESIGN ALLIANCE, INC.
LOS ANGELES
2830 TEMPLE AVENUE
LONG BEACH, CA 90806-2213
T: 562.989.3843
F: 562.989.3847
www.LightingDesignAlliance.com

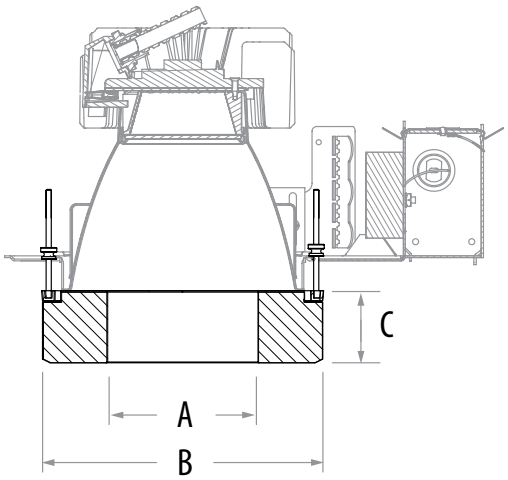

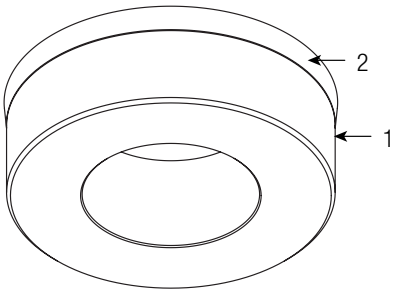

3 Piece Ordering System: Complete Fixture consists of Decorative Element, Calculite Light Engine, and Calculite Frame-In Kit. Each sold separately.

Aperture	Decorative Element Catalog No.	Frame-In Kit	Trim	Wattage	Dimensions		
					A	B	C
6"	D6A02	C6L1520 Series	C6L15 Series	27W	4"	7 1/2"	1 7/8"
			C6L20 Series	39W			

Features

1. **Decorative Element:** Solid high temp, UV resistant composite with open aperture. Interior diameter is frosted. Polished exterior.
2. **Die Cast Construction Ring:** Exterior edge of construction ring is visible, satin aluminum finish matches diameter of decorative element for a flangeless appearance.
3. **Fastener cover:** Stamped aluminum cover ring provided on top of decorative element to cover construction ring fasteners.
4. **Mounting Frame Fasteners:** Four #8-32 screws and 4 knurled die-cast thumb screws secure construction ring to frame in kit.
5. **Reflector:** FLANGELESS TRIM REQUIRED. Specified separately. Use Specular Clear (CL) finish for best performance and aesthetics
6. **Frame-In Kit:** Specified separately. See Trim Specification Sheet for additional details.

Mechanical

Decorative elements securely fastened to four mounting frame studs.

Labels

U.L. (Damp Location)

Job Information **Type:**

Job Name:

Cat. No.:

Lamp(s):

Notes:

631 Airport Road, Fall River, MA 02720 • (508) 679-8131 • Fax (508) 674-4710
We reserve the right to change details of design, materials and finish.
www.lightolier.com © 2010 Philips Group • A0310

PHILIPS LIGHTOLIER®

THE LIGHTING DESIGN ALLIANCE, INC.

LOS ANGELES
2830 TEMPLE AVENUE
LONG BEACH, CA 90806-2213

T: 562.989.3843
F: 562.989.3847
www.LightingDesignAlliance.com

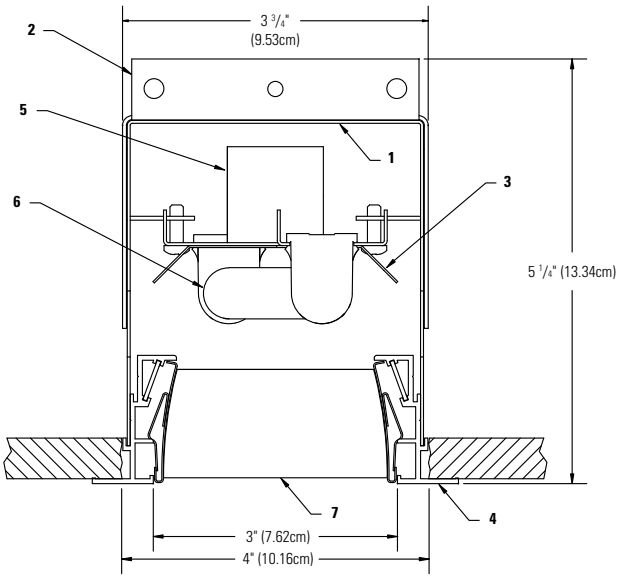

Complete ordering instructions below.

Ordering Information

Family	Mounting	Shielding	Configuration	Output	Length (nom.)	Housing	Voltage	Option
CT3	F	P	A					
CT3	**F** = Flange	**P** = Parabolic Louver	**A** = 1 Lamp[1]	**H** = High Output **S** = Standard	**2** = 2-foot **4** = 4-foot **8** = 8-foot	**U** = Indiv. Unit **S** = Starter **J** = Joiner **T** = Telescoping[2]	**1** = 120V **2** = 277V	**E** = EM Pack[3] **T** = Tandem Switch **4** = 4 Through Wires **5** = 5 Through Wires **D** = Dimming

[1] Lamp is mounted diagonally and extends into adjacent fixture by 2-1/2" (6.35cm) in Starter, Joiner and Telescoping fixtures
[2] Telescoping fixture ships 85-3/8" (216.85cm), adjustable down to 49-3/8" (125.41cm)
[3] EM pack not available in 2-foot or Telescoping fixtures

Features

1. **Housing:** 20 gauge pre-painted steel
2. **Bulkhead:** 18 gauge galvanized steel
3. **Reflector:** semi-specular aluminum
4. **Trim:** aluminum extruded, flange 3/4" (1.91cm) width
5. **Ballast:** program start electronic
6. **Lamp:** T5 or T5 HO fluorescent
7. **Louver:** semi-specular parabolic, 2-1/4" (5.72cm) nominal blade spacing

Mounting

Housing is suspended by hanger wires by others.
Optional factory provided Quick-Draw Installation System shown on page 2.

Electrical

Electronic Ballast: Programmed start, 3 conductor, 12 gauge wire.
Color-coded quick connectors allow easy connection for modular fixtures. T5HO lamps are dimmed with Advance Mark 10. T5 standard output lamps are dimmed with ULT Super Dim. Use compatible dimmers and feed wires. Factory installed ballast disconnect allows the ballast to be disconnected from and reconnected to incoming power under load without turning the entire circuit off.
Emergency Battery Pack: 450 Lumens @ 90 minimum.

Labels

UL, cUL and IBEW

Ordering Instructions

Individual Fixtures:

1. Order number of INDIVIDUAL UNITS required.

Continuous Rows:

1. Determine run length
2. Order one Starter fixture
3. Order one Telescoping fixture*
4. Order remainder of Joiner fixtures

* For best one-lamp effect, use Telescoping fixture at longest length possible.

Job Information	**Type:**
Job Name:	
Cat. No.:	
Lamp(s):	
Notes:	

631 Airport Road, Fall River, MA 02720 • (508) 679-8131 • Fax (508) 674-4710
We reserve the right to change details of design, materials and finish.
www.lightolier.com © 2009 Philips Group • F0709

Lightolier is a Philips group brand

PHILIPS

THE LIGHTING DESIGN ALLIANCE, INC.
LOS ANGELES
2830 TEMPLE AVENUE
LONG BEACH, CA 90806-2213
T: 562.989.3843
F: 562.989.3847
www.LightingDesignAlliance.com

RECESSED T5 LAMPING

PROJECT INFORMATION

Project:

Type:

Notes:

REVIT files are available for download at www.axislighting.com

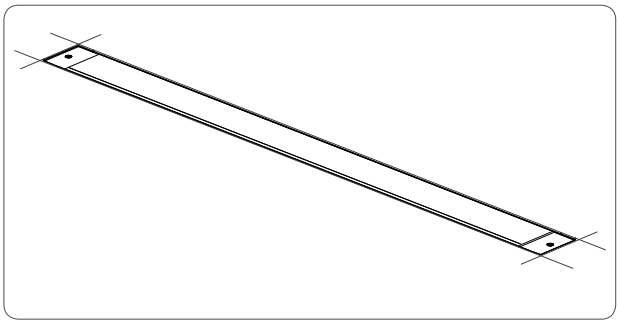

PRODUCT ORDERING CODE

product id	optics lens	length/ft	lamp	lamp config.	finish	voltage	ballast	circuits	power feed	other	controls	custom
WBR			T5									

WBR recessed

F frosted lens
C clear lens
S satin lens

2
3
4
5
6
8

T5

1 lamp
2 lamps

W white
AP alu. paint
C custom

UNV
120
277
347*
*Please consult factory

ERS rapid start
D dimming (specify details)

1 one circuit
2 two circuits
+E em. circuit

EF end feed
TF top feed

B# battery pack (specify details)
F fuse

OS occ.
*See Integrated Controls Guide for further details.

C custom (describe below)

Dimming Ballast, Battery Pack and Integrated Control Details:

Custom Description:

Specification sheets for other lamping are available for download at www.axislighting.com

DIMENSIONS

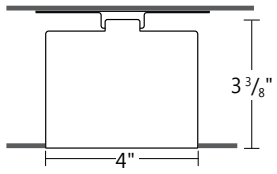

LAMPING CONFIGURATIONS

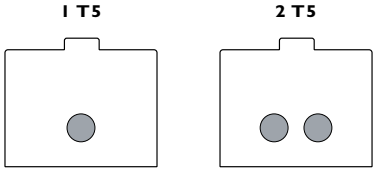

SIDE VIEW DIMENSIONS

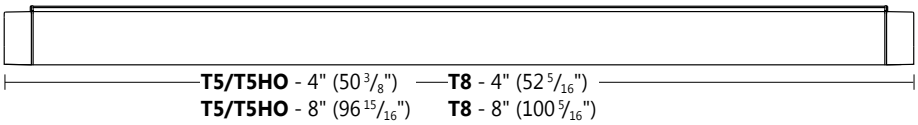

FILE NAME:WBR.T5.SPEC June 30, 2011

ÉCLAIRAGE axis LIGHTING
1.800.263.AXIS
[T] 514.948.6272
[F] 514.948.6271
www.axislighting.com

Product design and development is an ongoing process at Axis Lighting. We reserve the right to change specifications. Contact Axis for the latest product information.

© 2010 Axis Lighting Inc.

THE LIGHTING DESIGN ALLIANCE, INC.
LOS ANGELES
2830 TEMPLE AVENUE
LONG BEACH, CA 90806-2213
T: 562.989.3843
F: 562.989.3847
www.LightingDesignAlliance.com

RECESSED T5 LAMPING

MOUNTING OPTIONS

SIDE VIEW

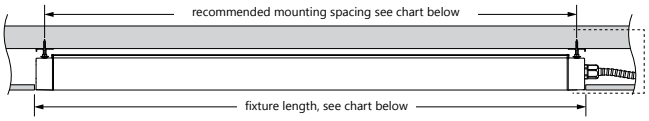

END VIEW

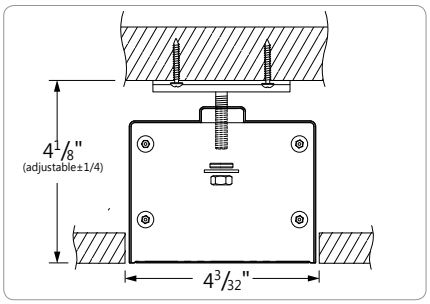

WET BEAM	MOUNTING SPACING		FIXTURE LENGTH	
LAMPS	T5/T5HO	T8	T5/T5HO	T8
4'	49"	50 11/16"	50 5/8"	52 5/16"
8'	95 5/16"	98 11/16"	96 15/16"	100 5/16"

OTHER MOUNTING OPTIONS

WET BEAM is available with, pendant, surface and wall mounted options.

CONSTRUCTION

Housing	Extruded Aluminum (0.062'' nominal) 70% Recycled Content
End Cap	Die Cast Zinc (0.070" nominal)
Interior brackets	Die Formed Sheet Steel (16 ga)
Gaskets	Moulded Elastomer (0.100" nominal)
Lens Gaskets	Extruded Elastomer (0.045" nominal)
Clear Lens	Extruded Acrylic (0.075'' nominal) Clear: 90% transmissive
Frosted Lens	Extruded Acrylic (0.070'' nominal) Frosted: 85% transmissive
Satin Lens	Extruded Acrylic (0.070'' nominal) Frosted: 68% transmissive
Surface Mounting Brackets	Die Formed Sheet Steel (18 ga)
Lamp Options	T5, T5HO, T8

WEIGHT

4 ft	12.8 lbs / 5.8 Kg
8 ft	24.5 lbs / 11.1 Kg

GASKETTED FIXTURE

With it's gasketted end cap and lens the Wet Beam is made for wet locations, it is ideal for exterior soffits and canopies of malls, hospitals and other institutions.

JOINER SYSTEM

Wet Beam modular system consist of smaller modules joined and gasketted together allowing for system runs in lengths of 4' and 8' as well as custom lengths up to 8'.

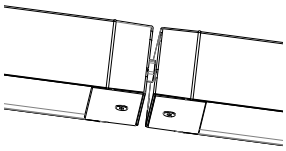

* For continuous rows allow 2" for connectors between each fixture.

POWER FEED

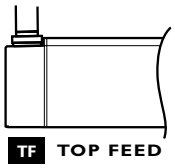

TF TOP FEED

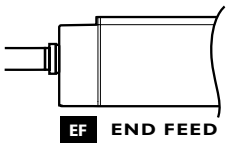

EF END FEED

FINISH

Aluminium paint, Powder Coated and custom finishes are also available.

ELECTRICAL

Ballast Options	Electronic Rapid Start, Dimming (0-10V, Line, Step, EcoSystem)
Emergency	Emergency Battery Pack or Circuit
Voltage	120, 277, 347 2, UNV

APPROVALS

Certified wet locations to UL and CUL standards

Row configuration, specification sheets and mounting spacing guides are available for download at: www.axislighting.com

ÉCLAIRAGE axis LIGHTING
1.800.263.AXIS
[T] 514.948.6272
[F] 514.948.6271
www.axislighting.com

Product design and development is an ongoing process at Axis Lighting. We reserve the right to change specifications. Contact Axis for the latest product information.

© 2010 Axis Lighting Inc.

THE LIGHTING DESIGN ALLIANCE, INC.
LOS ANGELES
2830 TEMPLE AVENUE
LONG BEACH, CA 90806-2213
T: 562.989.3843
F: 562.989.3847
www.LightingDesignAlliance.com

RECESSED T5 LAMPING

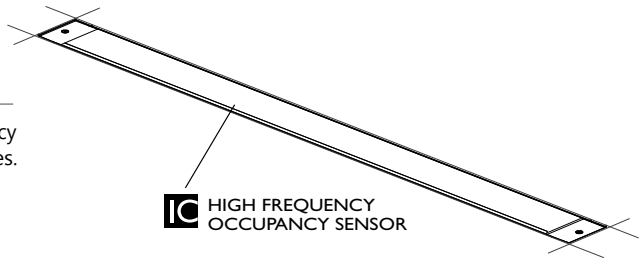

INTEGRATED CONTROL OPTIONS

WET BEAM luminaires allow the use of integrated controls such as occupancy sensors (OS), These sensors can be seamlessly integrated into our luminaires. The control system could be used to optimize the lighting of the space by reducing energy consumption through occupancy, thereby improving the overall interior environment and allowing for LEED credits.

- Consult factory for other options.
- Refer to IC brochure for more information.

SENSORS	BRAND	Model	TYPE	CODE	COMPATIBLE DIMMING BALLAST
Occupancy Sensor (OS)	Wattstopper	FM-105	High Frequency Occupancy	WH	Programmed Rapid Start

All IES files for other lamping are available for download at: www.axislighting.com

ÉCLAIRAGE axis LIGHTING
1.800.263.AXIS
[T] 514.948.6272
[F] 514.948.6271
www.axislighting.com

Product design and development is an ongoing process at Axis Lighting. We reserve the right to change specifications. Contact Axis for the latest product information.

© 2010 Axis Lighting Inc.

THE LIGHTING DESIGN ALLIANCE, INC.
LOS ANGELES
2830 TEMPLE AVENUE
LONG BEACH, CA 90806-2213
T: 562.989.3843
F: 562.989.3847
www.LightingDesignAlliance.com

PINNACLE MODIFICATION SPECIFICATION

Date: 9-22-11
Type: Fixture
Created By: A. Chronister

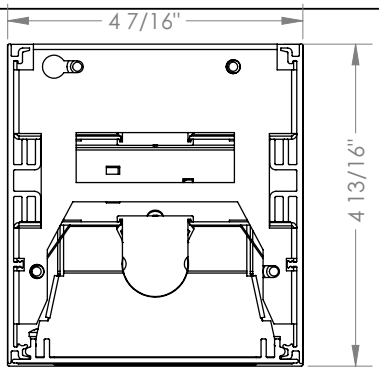

End View

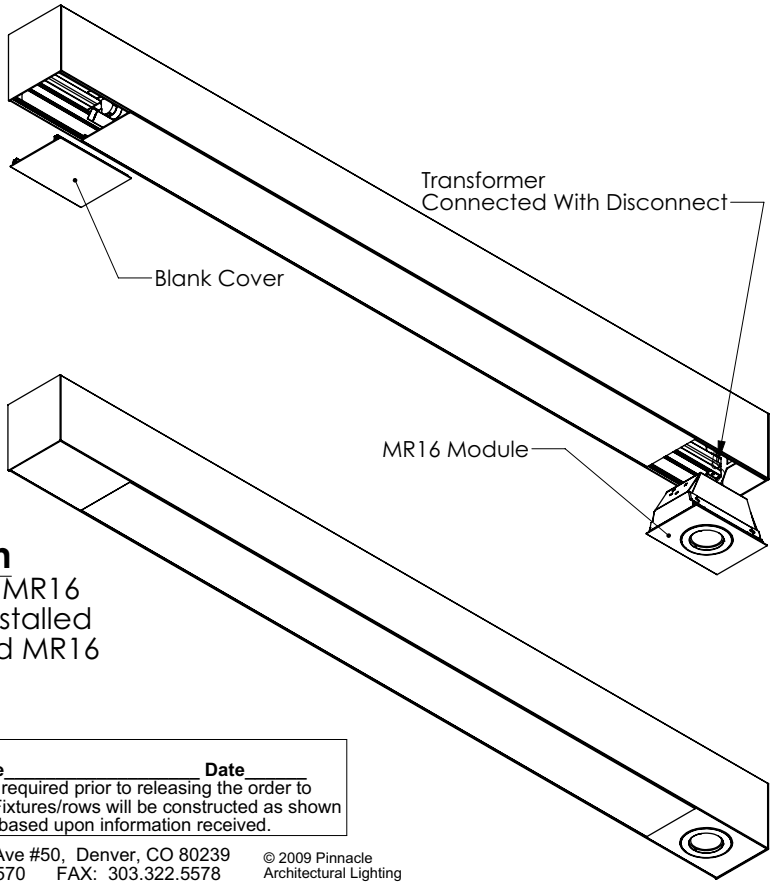

Edge EX4 - MR16 Configuration

Edge EX4 Fixture (Shown as Lens) with MR16 modules that can be removed and installed into blank module locations. Standard MR16 (Non-LED) only.

Signature_____ **Date**_____
Sign-off is required prior to releasing the order to production. Fixtures/rows will be constructed as shown and is based upon information received.

PINNACLE ARCHITECTURAL LIGHTING
12655 E. 42nd Ave #50, Denver, CO 80239
PH: 303.322.5570 FAX: 303.322.5578

© 2009 Pinnacle Architectural Lighting

LIGHTING DESIGN ALLIANCE

THE LIGHTING DESIGN ALLIANCE, INC.
LOS ANGELES
2830 TEMPLE AVENUE
LONG BEACH, CA 90806-2213
T: 562.989.3843
F: 562.989.3847
www.LightingDesignAlliance.com

CAT:	FEET:
TYPE:	PROJECT:

TIVOTAPE OUTDOOR™

STATIC TAPELIGHT

Energy-efficient, low voltage LED tape light strip emits sharp, pure color for unique effects in cove and architectural applications.

FEATURES

- Flexible waterproof flat conductor strip allows for wide range of installation possibilities
- Ideal for outdoor niche, recessed or borderline lighting
- Full range dimming available
- Sold in 1', 2', 4', 8', 12' and 16' NOM lengths

SPECIFICATIONS

TIVOTAPE OUTDOOR STATIC	EFFICACY LM/WT	CRI	LM/FT	WT/FT
Red	**31.5**	n/a	34	1.08
Yellow	27.8	n/a	30	1.08
Green	17.1	n/a	18	1.05
Blue	5.7	n/a	6	1.05
Cool White	**32.2**	80	37	1.15
Neutral White	29.6	74.6	34	1.15
Warm White	27.0	71.4	31	1.15

Items in bold denote Title 24 High efficacy rating. Measurements are based on 12V DC power design calculations will vary based on power supply and run lengths.

LED DATA	WATTAGE	LED LIFE* / COLOR TEMP	VIEWING ANGLE
Tivotpape Outdoor Static	0.06W per LED	**50,000 hrs.** Red, Yellow, Green, Blue, Cool White, Neutral White and Warm White	120°

** LEDs operate at 90% of LED manufacturers maximum current spec rating.*

1. **Spacing** - LED spacing: 11/16" O.C.
2. **LEDs** - Uses 18 LEDs per strip
3. **Mounting** - Includes installation-ready 3M tape adhesive for simplified installation
4. **Installation** - Optional clear and frosted tube and channel available for architectural effects
5. **Field Trimmable** - See Page 3 for cut zones
6. **Power Supply** - Listed Class II 12V DC power supply required
7. **Listing** - UL listed File #E321933
   - IP65 Outdoor rated
8. **Compliance** - ROHS Compliant
9. **Warranty** - 3 Year Warranty

c UL us **IP65**

PROFILES

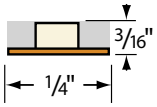

TIVOTAPE STATIC TAPE LIGHT ORDER SPECIFICATION GUIDE

Example: **TPL-O-CWH-1-MD-12**

PRODUCT CODE	INSTALL	LED COLOR	LENGTH	ENDPREP	VOLTAGE	REQUIRED POWER SUPPLY
TPL	O	_____	_____	_____	12	PSU
Tivotape Static™	O = Outdoor	RED = Red YEL = Yellow GRN = Green BLU = Blue CWH = Cool White (6000°K +/-300°K) NWH = Neutral White (4100°K +/-300°K) WWH = Warm White (3000°K +/-300°K)	1 = 1 foot 2 = 2 foot 4 = 4 foot 8 = 8 foot 12 = 12 foot 16 = 16 foot	MD = Male/Dead End MF = Male/Female	12 = 12V DC	*See power supply specsheets*

REQUIRED POWER SUPPLY OPTIONS

- ☐ ADUL-75-1-5-12-D
- ☐ ADUL-200-3-5-12-D
- ☐ ADNM-75-1-5-12-D
- ☐ ADNM-200-3-5-12-D
- ☐ JT-60-1-5-12-D
- ☐ JTH-60-1-5-12-D
- ☐ JT-240-4-5-12-D
- ☐ JTH-240-4-5-12-D
- ☐ HS-20-1-1.5-12-D
- ☐ HS-40-1-3.3-12-D

See power supply specifications for more information

OPTIONAL DIMMERS

- ☐ N-600
- ☐ N-1000
- ☐ NH-600
- ☐ NH-1000
- ☐ DIM-12V-8A
- ☐ DIM-OT-1-5-D

Copyright © 2011 Tivoli 11.30.11 - Page 1 of 4

tivoli®
Tivoli Lighting, LLC • 15602 Mosher Ave Tustin, CA 92780 • ph 714 957-6101 fx 714 427-3458 • www.tivolilighting.com / sales@tivolilighting.com

TIVOTAPE OUTDOOR™
STATIC TAPELIGHT

MOUNTING ACCESSORIES

TPL-TUBE-C/F-8 Architectural Tube
Available Clear or Frosted in 8' standard lengths, one piece Tivotape architectural tube is recommended for uneven mounting surfaces or applications that require straight and uniform orientation of LED's while adding protection from physical access. Can be mounted to TPL-TUBE-BASE-8 channel or directly to surface via double sided tape.

TPL-TUBE-EC Architectural Tube End Cap

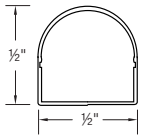

TPL-TUBE-BASE-8 Architectural Tube Mounting Channel can be used with the Architectural Tube or mounted directly to Tivotape.
Available Clear or Frosted in 8' standard lengths.

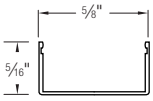

TPL-STRIP-1 Mounting strip
Available in 11¼" standard lengths. Tivotape mounts to the mounting strip to provide a flat rigid mount inside the Architectural tube or on it's own. Also recommended when mounting onto metal surfaces.

TPL-INF-C/F-CHAN-8 Infinity Channel
Available Clear or Frosted in 8' standard lengths, two piece Infinity mounting channel is recommended for uneven mounting surfaces or applications that require very straight and uniform orientation of LED's while adding protection from physical access. The Infinity mounting channel allows a wide beam spread from the mounting surface while maintaining a small over-all foot print.

TPL-INF-EC Infinity Channel End Cap

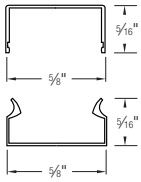

WIRING ACCESSORIES

TPL-LEAD-0-2-01/16 Lead Wire
2 conductor static lead wire available in 1' or 16' standard lengths. Features 24 gauge wire on input end and 2 pin static connection on other end.
TPL-CONN-0-2-1 Connector
1' Male/Female connector
TPL-CONN-0-2-2 Connector
2' Male/Female connector
TPL-CONN-0-2-4 Connector
4' Male/Female connector
TPL-CONN-0-2-16 Connector
16' Male/Female connector

MTBF

Mean Time Between Failures (MTBF) for LEDs: While Tivoli utilizes LEDs provided by industry leading vendors, these are electrical components with calculated manufacturers mean time between failures (MTBF). MTBF is rated as the average point at which 1/2 of color LEDs will lose 50% of their original brightness. MTBF for White LEDs is based on when 1/2 are reduced to 70% of their original brightness.

Typically, LED product failures occur within fixture construction, interdependent component failure, or operation under adverse conditions. Tivoli operates LEDs at a derated current to insure that LED MTBF values are based on product fixture construction and real application standards.

Still, conditions such as excessive voltage, vibration, heat, and other adverse conditions may negatively effect the life of LEDs.

Copyright © 2011 Tivoli 11.30.11

Tivoli Lighting, LLC • 15602 Mosher Ave Tustin, CA 92780 • ph 714 957-6101 fx 714 427-3458 • www.tivolilighting.com / sales@tivolilighting.com

PICO PUBLIC LIBRARY
FEBRUARY 21, 2012
LIGHTING CATALOG PAGE
THE LIGHTING DESIGN ALLIANCE, INC.
LOS ANGELES
2830 TEMPLE AVENUE
LONG BEACH, CA 90806-2213
T: 562.989.3843
F: 562.989.3847
www.LightingDesignAlliance.com
TYPE
SD1, SD2
2 of 4

TIVOTAPE OUTDOOR™
STATIC TAPELIGHT

CAT.NO	COLOR	VIEWING ANGLE	WAVELENGTH (COLOR TEMP)	WATTS PER FOOT	LUMENS PER FOOT	LUMENS PER WATT	LEDS PER FOOT	MAX LEDS PER 5A CIRCUIT*	MAX CONTINUOUS RUN
TPL-O-RED-1-12	Red	120°	625nm	1.08W	34	31.48	18	870 (50ft.)	470 LED's (27ft)
TPL-O-YEL-1-12	Yellow	120°	589nm	1.08W	30	27.78			
TPL-O-GRN-1-12	Green	120°	515nm	1.05W	18	17.14			
TPL-O-BLU-1-12	Blue	120°	470nm	1.05W	6	5.71			
TPL-O-CWH-1-12	Cool White	120°	5000-10000°k	1.15W	37	32.17		800 (46ft.)	450 LED's (26ft)
TPL-O-NWH-1-12	Neutral White	120°	3700-5000°k	1.15W	34	29.57			
TPL-O-WWH-1-12	Warm White	120°	2600-3700°k	1.15W	31	26.97			

* Based on 2.5A continuous run

PROFILE
MALE / DEAD-END

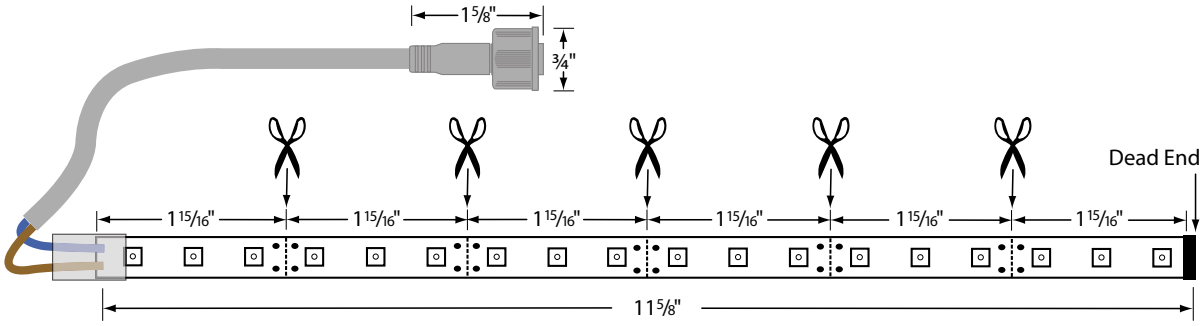

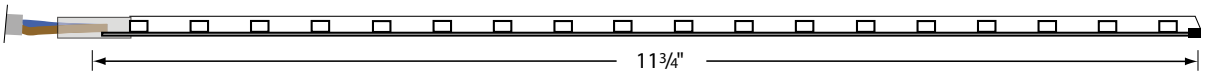

PROFILE
MALE / FEMALE

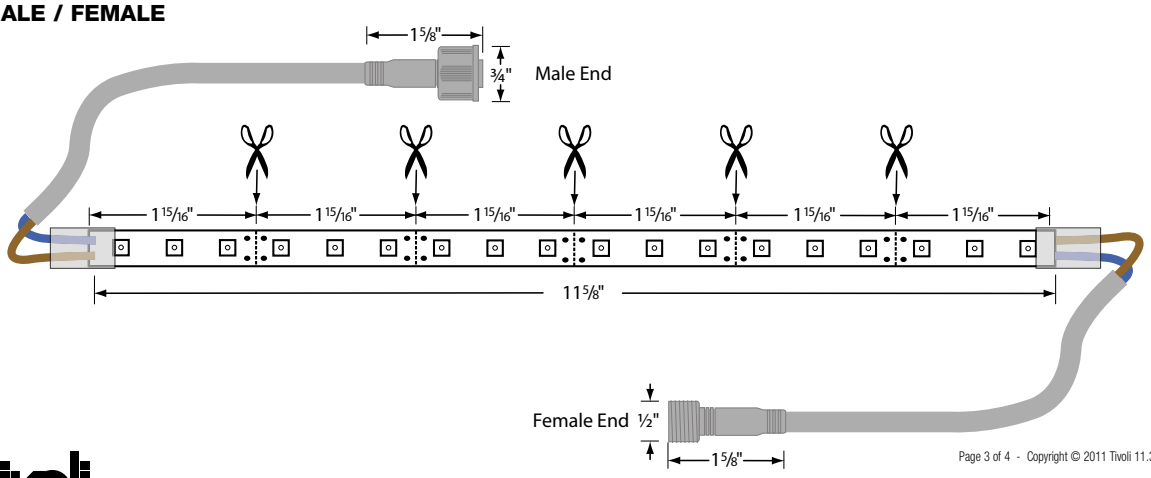

Page 3 of 4 - Copyright © 2011 Tivoli 11.30.11

Tivoli Lighting, LLC • 15602 Mosher Ave Tustin, CA 92780 • ph 714 957-6101 fx 714 427-3458 • www.tivolilighting.com / sales@tivolilighting.com

THE LIGHTING DESIGN ALLIANCE, INC.
LOS ANGELES
2830 TEMPLE AVENUE
LONG BEACH, CA 90806-2213
T: 562.989.3843
F: 562.989.3847
www.LightingDesignAlliance.com

TIVOTAPE OUTDOOR™
STATIC TAPELIGHT

RECOMMENDED POWER SUPPLIES

PART #	PRIMARY AND SECONDARY	TOTAL WATTAGE / AMPERAGE PER BREAKER	LISTING	DIMENSIONS	WEIGHT	ELECTRONIC OR AC MAGNETIC	DIMMABLE (Y OR N)
ADUL-75-1-5-12-D	85-264V AC / 12V DC	75 / 1X5A	UL/ETL	10"W X 10"L X 4"D		Electronic	Y: C & D
ADUL-200-3-5-12-D	85-264V AC / 12V DC	200 / 3X5A	UL/ETL	10"W X 10"L X 4"D		Electronic	Y: C & D
ADNM-75-1-5-12-D	85-264V AC / 12V DC	75 / 1X5A	UL/ETL	10"W X 10"L X 4"D		Electronic	Y: C & D
ADNM-200-3-5-12-D	85-264V AC / 12V DC	200 / 3X5A	UL/ETL	10"W X 10"L X 4"D		Electronic	Y: C & D
JT-60-1-5-12-D	120V AC / 12V DC	60 / 1X5A	ETL	4.25"W X 8.50"L X 3.25"D		Magnetic	Y: A, B, C & D
JTH-60-1-5-12-D	277V AC / 12V DC	60 / 1X5A	ETL	4.25"W X 8.50"L X 3.25"D		Magnetic	Y: C, D, E & F
JT-240-4-5-12-D	120V AC / 12V DC	240 / 4X5A	ETL	8.50"W X 16.00"L X 4.50"D		Magnetic	Y: A, B, C & D
JTH-240-4-5-12-D	277V AC / 12V DC	240 / 4X5A	ETL	8.50"W X 16.00"L X 4.50"D		Magnetic	Y: C, D, E & F
HS-20-1-1.5-12-D	120-240V AC / 12V DC	75 / 1X1.5A	UL	1.60"W X 3.80"L X 1.00"D		Electronic	N
HS-40-1-3.3-12-D	120-240V AC / 12V DC	200 / 1X3.3.A	UL	3.60"W X 2.75"L X 1.25"D		Electronic	N

DIMMERS

SELECTOR	DIMMER	TYPE	CONTROL SIGNAL	INPUT VOLTAGE	OUTPUT VOLTAGE	MAX LOAD	BREAKER RATING	DIMENSIONS
A	N-600	AC Magnetic	N/A	120V AC	120V AC	450W Max.	N/A	Recessed Single gang box
B	N-1000	AC Magnetic	N/A	120V AC	120V AC	800W Max.	N/A	Recessed Dual gang box
C	DIM-12V-8A	DC Digital	N/A	12V DC	12V DC	96W	8A*	Single gang box
D	DIM-OT-1-5-D	Control Interface	1-10VDC	12V DC	12/24V DC	60W	5A**	7"L X 1½"W X ¾"H
E	NH-600	AC Magnetic	N/A	277V AC	277V AC	450W	N/A	Recessed Single gang box
F	NH-1000	AC Magnetic	N/A	277V AC	277V AC	800W	N/A	Recessed Dual gang box

**OTDIM applications require 1 each OTDIM per 5 amp circuit

PRODUCT SPECIFICATION GUIDE

LIGHT SOURCE	MAX CONTINUOUS RUN LENGTH
Red, Yellow, Green, Blue	27ft
Whites	26ft

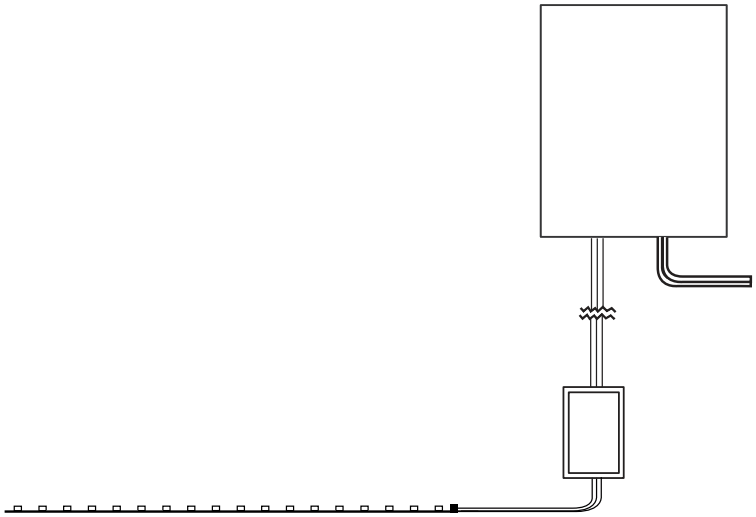

Tivoli Lighting, LLC • 15602 Mosher Ave Tustin, CA 92780 • ph 714 957-6101 fx 714 427-3458 • www.tivolilighting.com / sales@tivolilighting.com

THE LIGHTING DESIGN ALLIANCE, INC.
LOS ANGELES
2830 TEMPLE AVENUE
LONG BEACH, CA 90806-2213
T: 562.989.3843
F: 562.989.3847
www.LightingDesignAlliance.com

NARROW WIDTH CHANNEL

2 1/2" WIDE x 1 13/16" DEEP x 18", 24", 36", 48", 72", 96" LENGTHS, ONE LAMP, T8 OR T12

Features

- Fixtures suitable for individual, row, surface, or suspension mounting.
- Efficiency 94% (T8).
- Quarter turn latch secures channel cover for easy wireway access.
- Heavy duty channel of code gauge die formed steel.
- Only 2-1/2" wide.
- Fully enclosed wiring.
- U.L. Listed snap-on end caps.
- Combination end cap for continuous row mounting.
- Green grounding screw installed in channel.
- UL listed for direct mounting on low density ceilings and damp locations.

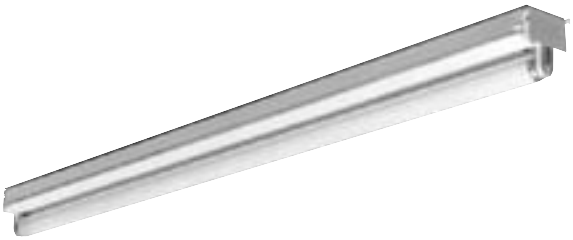

Dimensions

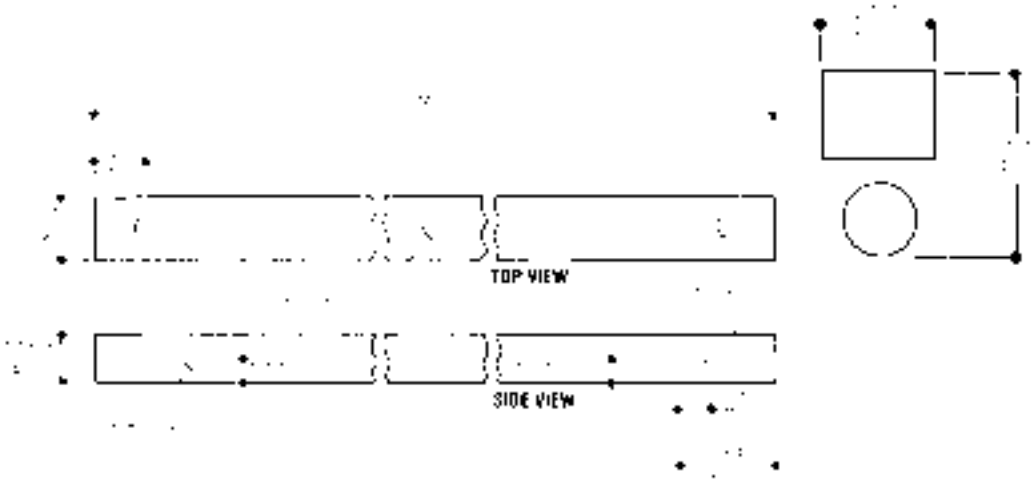

DIMENSIONS

Channel Length	Inches	mm

Job Information **Type:**

Job Name:

Cat. No.:

Lamp(s):

Volts/Ballast:

Lightolier a Genlyte Thomas Company www.lightolier.com
Technical Information: (978) 657-7600 • Fax (978) 658-0595
631 Airport Road, Fall River, MA 02720 • (508) 679-8131 • Fax (508) 674-4710
We reserve the right to change details of design, materials and finish.
© 2002 Genlyte Thomas Group LLC (Lightolier Division)
A0902 **SECTION 3A/Folio H110-40**

THE LIGHTING DESIGN ALLIANCE, INC.

LOS ANGELES
2830 TEMPLE AVENUE
LONG BEACH, CA 90806-2213

T: 562.989.3843
F: 562.989.3847
www.LightingDesignAlliance.com

NARROW WIDTH CHANNEL

2 1/2" WIDE x 1 13/16" DEEP x 18", 24", 36", 48", 72", 96" LENGTHS, ONE LAMP, T8 OR T12

PHOTOMETRY

ORDERING INFORMATION

Explanation ot Catalog Number Example: SN4S130LPF120SOGLR

OPTIONS/ACCESSORIES

FUSING: Internal fast-blow fusing.
SUFFIX: **GLR**.
Internal slow-blow fusing.
SUFFIX: **GMF**.

RADIO INTERFERENCE FILTER: 120 or 277 volt, 50 or 60 Hz. One per fixture is standard. SUFFIX: **RF**.

FLUORESCENT EMERGENCY LIGHTING SYSTEM: Factory-installed emergency power battery pack with charger and inverter. SUFFIX: **EM**.

STEM AND CANOPY SETS: Suspends fixture 6", 12", 18" or 24" from surface. (Four per fixture is recommended.) **Catalog Number: ASC6 CSP** (6"), **ASC12 CSP** (12"), **ASC18 CSP** (18"), **ASC24 CSP** (24")

CANOPY SPACER: Suspends fixture 1-1/2" from surface. Order Catalog Number: **AC1 CSP**

GROUNDED CONVENIENCE OUTLET: 120 volt only. SUFFIX: **CO**.

4' WIRE GUARD: Catalog Number: **AWG1W CSP**.

REFLECTORS: Order Catalog Number:

SYMMETRICAL:	**NSYMC20 CSP (24")**
	NSYMC30 CSP (36")
	NSYMC40 CSP (48")
ASYMMETRICAL:	**NASYC20 CSP (24")**
	NASYC30 CSP (36")
	NASYC40 CSP (48")

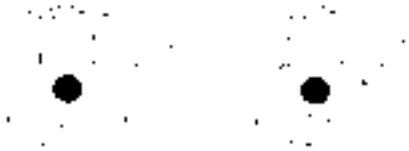

SPECIFICATIONS

MATERIALS: Chassis parts are die-formed heavy gauge cold rolled steel, 1-13/16" deep x 2-1/2" channel width.

BALLAST COVER: Code gauge steel secured with 1/4" turn fasteners.

FINISH: Chassis exterior phosphate undercoating, baked white polyester enamel.

ELECTRICAL: Thermally protected class "P" ballast C.B.M. approved, non-PCB. If K.O. is within 3" of ballast, use wire suitable for at least 90°.

LABELS: I.B.E.W./UL and ULc Listed.

Job Information	**Type:**

Lightolier a Genlyte Thomas Company www.lightolier.com
Technical Information: (978) 657-7600 • Fax (978) 658-0595
631 Airport Road, Fall River, MA 02720 • (508) 679-8131 • Fax (508) 674-4710
We reserve the right to change details of design, materials and finish.
© 2002 Genlyte Thomas Group LLC (Lightolier Division)
A0902 **SECTION 3A/Folio H110-40**

THE LIGHTING DESIGN ALLIANCE, INC.
LOS ANGELES
2830 TEMPLE AVENUE
LONG BEACH, CA 90806-2213
T: 562.989.3843
F: 562.989.3847
www.LightingDesignAlliance.com

1-1/8" DEEP **T5 UNDER CABINET**

SERIES **1SF 1WO**

VOLTAGE TYPE JOB

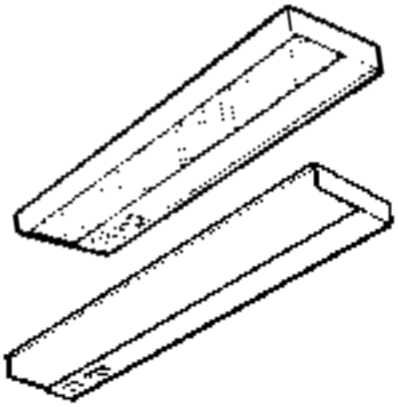

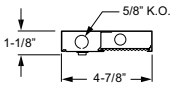

1SF Solid Front

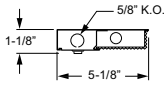

1WO Wrap-around Opal

SPECIFICATIONS

- HOUSING — 20-gauge die-formed, welded C.R.S.
- SHIELDING — 1SF: Flat, clear acrylic prismatic lens. 1WO: High-impact, extruded white opal acrylic lens.
- FINISH — 92% minimum average reflective white polyester powder coat bonded to multi-stage, pretreated, conversion coated metal.
- ELECTRICAL — T5 pre-heat ballast with built-in electronic starter or program rapid start (dependent upon lamp—consult factory), rated Class P.
- MOUNTING — Surface.
- LABELS — UL/CUL listed as fluorescent luminaire suitable for dry or damp locations.

FEATURES

- Small profile allows inconspicuous placement in confined spaces.
- Provides uniform, glare-free illumination of task area.
- Housing keyhole slots and knockouts provide quick and easy installation.
- Individual or continuous row mounting.
- Optional anti-microbial powder coating available to prevent the spread of dangerous micro-organisms and suppress the growth of mold and bacteria.
- All-welded construction provides long lasting performance.
- All parts painted after fabrication to facilitate installation, increase efficiency, and inhibit corrosion.
- This fixture is proudly made in the USA.

ORDERING INFORMATION

Submittal

	SERIES		NOM. LENGTH		TOTAL LAMPS		WATTAGE/ TYPE		SHIELDING (1SF ONLY)		OPTIONS		BALLAST TYPE		VOLTAGE
EXAMPLE:	1SF	-	24	-	2	-	08T5P	-	A12125	-	OPTIONS	-	EB2	-	120

SERIES

1SF	Solid Front
1WO	Wrap-around Opal

NOMINAL LENGTH

T5S	
2	2′
3	3′
4	4′
T5P	
12	12″
21	21″
24	24″
33	33″
42	42″

TOTAL LAMPS (1-lamp cross-section only)

1	
2	(T5P, tandem only)

LAMP WATTAGE/TYPE

T5S	
14T5S	2′, 14-watt T5
21T5S	3′, 21-watt T5
28T5S	4′, 28-watt T5
T5P	
08T5P	12″, 8-watt preheat T5 (2-lamp tandem available for 24″)
13T5P	21″, 13-watt preheat T5 (2-lamp tandem available for 42″)
138T5P	(1) 21″, 13-watt and (1) 12″, 8-watt preheat T5 (tandem)

SHIELDING (1SF only)

A12125	#12 pattern acrylic, .125″ thick
KSH-25/A	Linear ribbed acrylic for wide distribution, .110″ thick
KSH-25/B	Perpendicular ribbed acrylic for focused distribution, .110″ thick

Note: For more options/accessories, ballast combinations, and product details, please consult factory.

OPTIONS

GCO	Grounded convenience outlet (120V only)
C&P/120	6-1/2′ cord and plug, NEMA 5-15P (120V only)
WRS	White rocker switch (120V only)
AMW	Anti-microbial white finish

BALLAST TYPE

EB1	1-lamp electronic ballast
EB2	2-lamp electronic ballast

VOLTAGE

120	120V
277	277V
UNV	120-277V
347	347V

Williams FLUORESCENT LIGHTING

H.E. Williams, Inc. • Carthage, Missouri • www.hewilliams.com • 417-358-4065 • Fax: 417-358-6015

LIGHTING DESIGN ALLIANCE

THE LIGHTING DESIGN ALLIANCE, INC.
LOS ANGELES
2830 TEMPLE AVENUE
LONG BEACH, CA 90806-2213
T: 562.989.3843
F: 562.989.3847
www.LightingDesignAlliance.com

LIGHTING DESIGN ALLIANCE

1SF 1WO SERIES

PHOTOMETRY INFORMATION

Williams Catalog #1SF-24-208T5P
Lamp Type: F8T5/CW
Test Report #7967.0, Dated 06/29/94
Lamp Quantity: 2

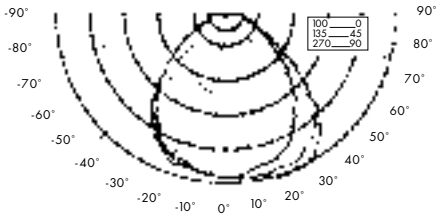

LUMEN SUMMARY

ZONE	LUMENS	% LAMP	% FIXTURE
0 - 30	155.	19.9	32.0
0 - 40	255.	32.7	52.6
0 - 60	414.	53.1	85.6
0 - 90	484.	62.1	100.0
90 - 120	0.	.0	.0
90 - 130	0.	.0	.0
90 - 150	0.	.0	.0
90 - 180	0.	.0	.0
Total Luminaire 0-180	484.	62.1	100.0

TOTAL LUMINAIRE
OPTICAL **EFFICIENCY = 62.1 %**

Williams Catalog #1WO-24-208T5P
Lamp Type: F8T5/CW
Test Report #7966.0, Dated 06/29/94
Lamp Quantity: 2

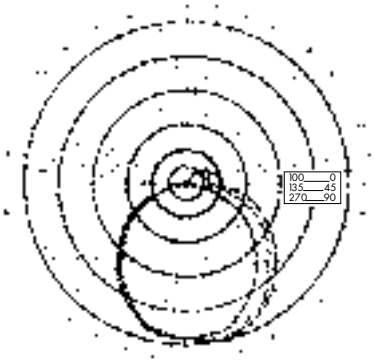

LUMEN SUMMARY

ZONE	LUMENS	% LAMP	% FIXTURE
0 - 30	113.	14.5	24.0
0 - 40	185.	23.7	39.4
0 - 60	325.	41.7	69.1
0 - 90	434.	55.6	92.2
90 - 120	25.	3.2	5.3
90 - 130	31.	3.9	6.5
90 - 150	36.	4.6	7.6
90 - 180	37.	4.7	7.8
Total Luminaire 0-180	471.	60.3	100.0

TOTAL LUMINAIRE
OPTICAL **EFFICIENCY = 60.3 %**

BACK VIEW

CATALOG NO.	DIMENSION A	DIMENSION B
1SF-12-108T5P or 1WO-12-108T5P	12-1/8"	7-1/2"
1SF-21-113T5P or 1WO-21-113T5P	21-1/2"	17"
1SF-24-208T5P or 1WO-24-208T5P	24-1/2"	20"
1SF-2-214T5S or 1WO-2-114T5S	22-5/8"	20"
1SF-33-138T5P or 1WO-33-138T5P	33-1/2"	29"
1SF-3-121T5S or 1WO-3-121T5S	34-3/8"	29"
1SF-42-213T5P or 1WO-42-213T5P	42-1/2"	38"
1SF-4-128T5S or 1WO-4-128T5S	46-1/4"	38"

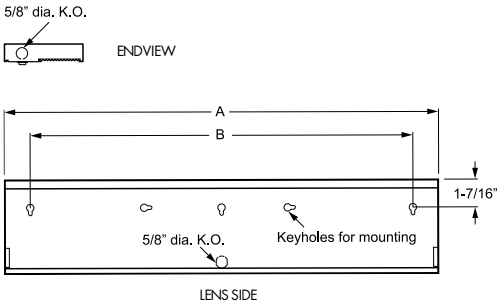

Back of housing provided with adequate keyhole slots and K.O. for mounting and wiring.

Williams
H.E. WILLIAMS, INC.

H.E. Williams, Inc. • Carthage, Missouri • www.hewilliams.com • 417-358-4065 • Fax: 417-358-6015

Information contained herein is subject to change without notice.

HEWJP43626 09/02/11RJ

THE LIGHTING DESIGN ALLIANCE, INC.
LOS ANGELES
2830 TEMPLE AVENUE
LONG BEACH, CA 90806-2213
T: 562.989.3843
F: 562.989.3847
www.LightingDesignAlliance.com

AJ Eklipta Wall/Ceiling

Design: Arne Jacobsen

17.7"-2-26W-CF

Type:

Project:

Catalog Number:

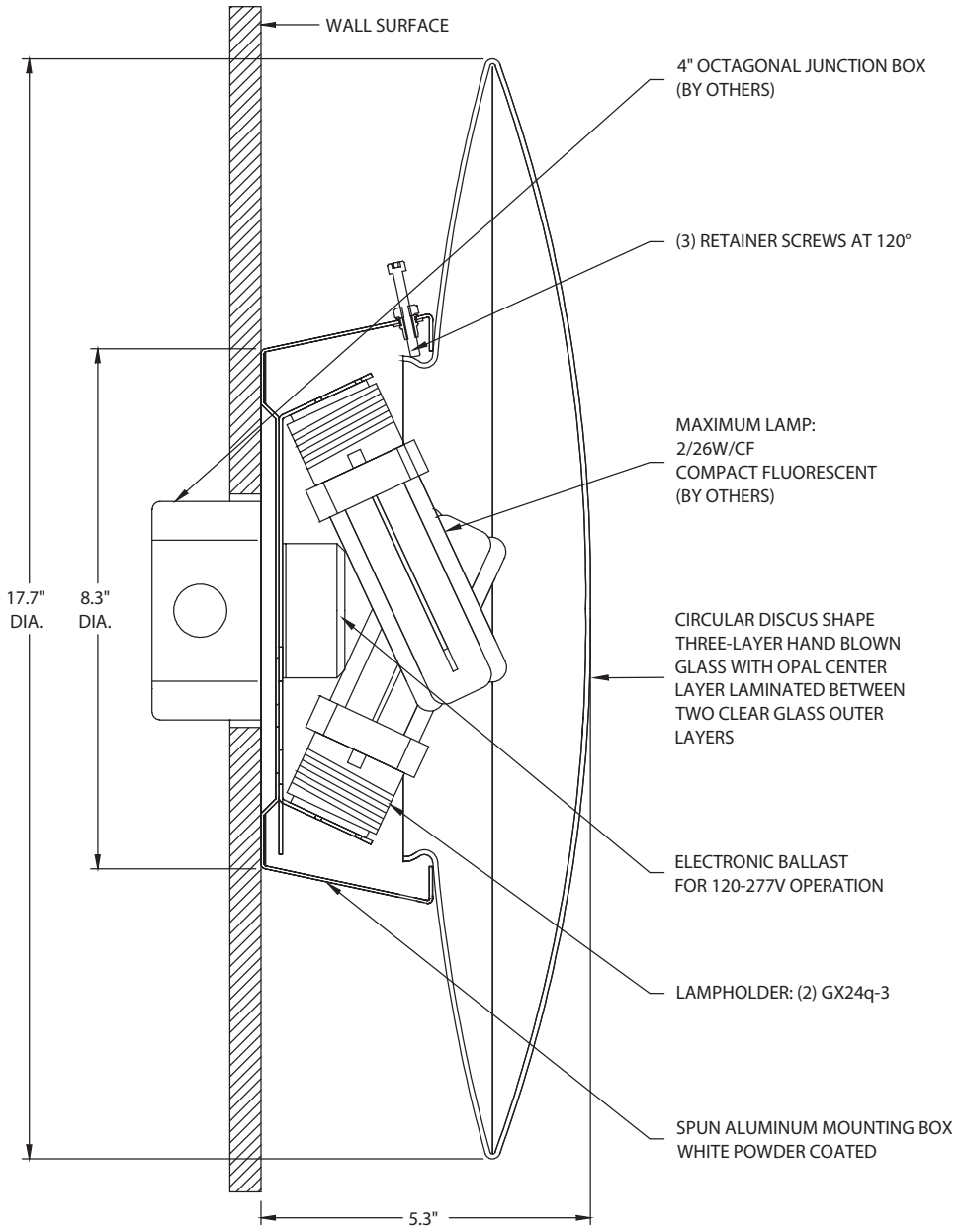

Louis Poulsen Lighting, Inc., 3260 Meridian Parkway, Fort Lauderdale, FL 33331
Telephone: (954) 349-2525 Fax: (954) 349-2550 www.louispoulsen.com

THE LIGHTING DESIGN ALLIANCE, INC.

LOS ANGELES
2830 TEMPLE AVENUE
LONG BEACH, CA 90806-2213

T: 562.989.3843
F: 562.989.3847
www.LightingDesignAlliance.com

AJ Eklipta Wall/Ceiling

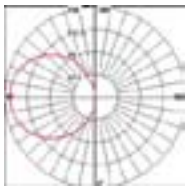

Photometric Report:	AJE-1-40W-INC.IES
Report No.:	L4662
Poulsen Report No.:	AJE-1-40W-INC.IES
Luminaire:	AJE-1-40W-INC
Lamp:	1/40W/G9/Halogen
Efficiency:	67.5%
Description:	All data shown are per 1000 lumens. This report can be used for calculation on all versions listed below. Use only actual lumen data when calculating.

Candlepower Distribution

Vertical Angle	Candela
0	18
5	22
15	35
25	56
45	98
55	114
75	137
85	142
90	142
105	138
125	117
145	80
165	26
180	2

Zonal Lumen Summary

Zone	Lumens	% Lamp	% Fixture
0-30	23	2.3	3.4
0-40	48	4.8	7.1
0-60	133	13.3	19.7
0-90	335	33.5	49.7
90-120	204	20.4	30.2
90-130	264	25.4	37.6
90-150	317	31.7	47.0
90-180	340	34.0	50.3
0-180	675	67.5	100.0

Weblink: 107

Design: Arne Jacobsen

Light Concept: The fixture emits soft comfortable light. The glass is designed to provide a uniformly lit surface. The three-layer hand-blown opal glass shade has a transparent edge, providing a decorative halo of light around the fixture.

Finish: White, powder coated. White opal glass.

Material: Ceiling/Wall box: Spun aluminum. Diffuser: Handblown white opal glass.

Mounting: Surface: Mounted directly to finished surface over a recessed 4″ octagonal junction box.

Weight: Max. 6 lbs.

Label: cULus, Damp location, Wet location. IBEW.

Product code	Dimension	Light source	Voltage	Finish	Mounting
AJE	8.7″. 13.7″ 17.7″	1/18W/CF GX24q-2 2/18W/CF GX24q-2 2/26W/CF GX24q-3 1/60W/A-19/IF medium 1/100W/A-19/IF medium 1/40W/T-4/IF G9	120-277V 120V	WHT	WALL AND CEILING WALL

Specification notes:
a. 8.7″ variant only available in 1/40W/T-4/IF G9.
b. 13.7″ variant available in 1/18W/CF or 1/60W incandescent.
c. 17.7″ variant available in 2/26W/CF, 1/100W incandescent or 2/18W/CF.
d. 2/26W/CF variant only available for wall mounting.
e. CF variants provided with one 120-277V electronic ballast.
f. Incandescent variants only available in 120V.

Info notes:
I. The comparable EU version has the following classification: Ingress Protection Code: IP44.

THE LIGHTING DESIGN ALLIANCE, INC.
LOS ANGELES
2830 TEMPLE AVENUE
LONG BEACH, CA 90806-2213
T: 562.989.3843
F: 562.989.3847
www.LightingDesignAlliance.com

SPECIFICATION SHEET

lumenbeam™

MEDIUM
WHITE & STATIC COLORS

Client: _____

Project name: _____

Order # _____

Type: _____ Qty: _____

FEATURES AND BENEFITS

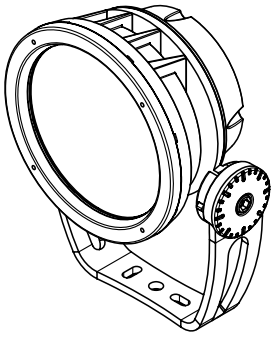

Physical :

- Low copper content high pressure die-cast aluminum housing
- Heavy aluminum formed yoke (standard yoke included)
- Stainless steel hardware
- Silicone sealing devices
- Clear tempered glass
- Dual chamber design for heat management and ease of maintenance
- Electro-statically applied polyester powder coat finish
- 3.05 kg / 6.7 lbs
- IP66
- EPA: Front = 0.46 sq. ft. Side = 0.37 sq. ft.

Performance :

- Minimum 1fc (10.7 lux) @ 238 feet (72.5m) distance (4000K, 6° optic)
- 1,400 delivered lumens and 56,521 candelas at nadir (4000K, 6° optic)
- 6°, 10°, 20° or 40°, Elliptical distribution on 10° and 40° optics
- Lumen maintenance L70 @ 25°C - 120,000 hrs
- Lumen measurements comply with LM - 79 - 08 standard
- Operating temperatures : -25°C to 50°C

Electrical :

- Line voltage luminaire for 120 to 277V
- Power and data in 1 cable, 3ft cord (#16-5)
- 27 watts
- 0-10 volt, DMX or DALI dimming options

Wiring detail

WIRE COLOR	*USE*
GREEN	*GROUND*
WHITE	*NEUTRAL*
BLACK	*LIVE 120-277V*
RED	*0-10V / DATA +*
ORANGE	*0-10V / DATA -*

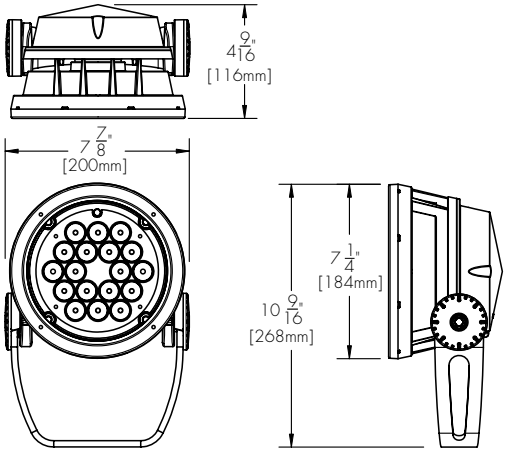

Standard Yoke (as shown, included)

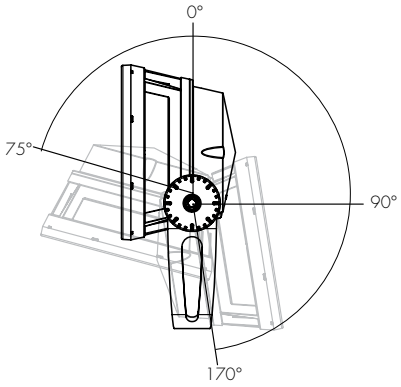

Standard Yoke Mounting
Adjustable pivot limits

5 year warranty

1/11

Lumenpulse, 1751 Richardson, Suite 1505, Montreal (Quebec) Canada H3K 1G6 1.877.937.3003 P. 514.937.3003 F. 514.937.6289
info@lumenpulse.com **www.lumenpulse.com**
© Copyright Lumenpulse 2011

2011.12.12
EM - R12

Lumenpulse reserves the right to make changes to this product at any time without prior notice and such modification shall be effective immediately.

lumenpulse™
Sustainable architectural LED lighting systems

THE LIGHTING DESIGN ALLIANCE, INC.

LOS ANGELES
2830 TEMPLE AVENUE
LONG BEACH, CA 90806-2213

T: 562.989.3843
F: 562.989.3847
www.LightingDesignAlliance.com

TYPE
WD1

MOUNTING OPTIONS

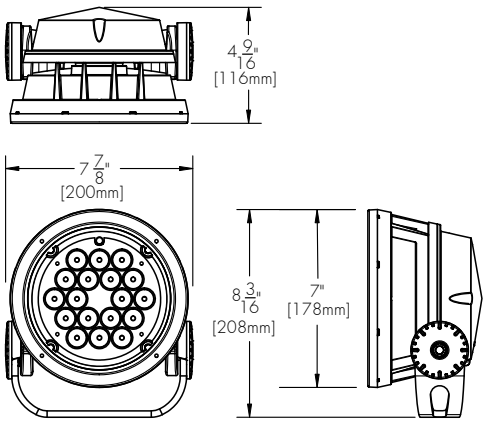

SY
Short Yoke Mounting

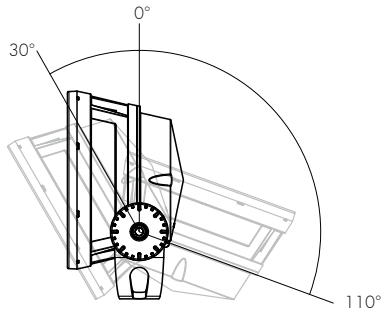

Short Yoke mounting
adjustable pivot limits

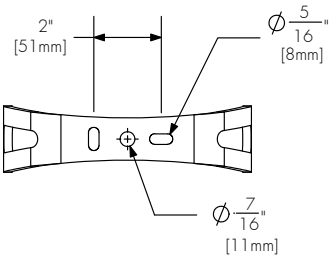

Standard and Short Yoke mounting
holes pattern

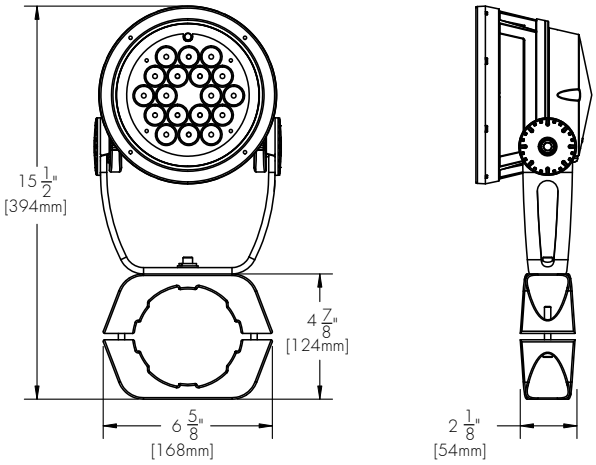

PM
Round Pole Mounting Accessory
*Consult factory for square pole section

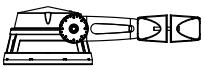

PM4-1, PM4.5-1, PM5-1
Round Pole Mounting accessory
single fixture

PM4-2, PM4.5-2, PM5-2
Round Pole Mounting accessory
twin fixtures

When **PM4-2, PM4.5-2 or PM5-2** are specified, one bracket assembly is supplied per 2 fixtures unles: otherwise specified.

Lumenpulse, 1751 Richardson, Suite 1505, Montreal (Quebec) Canada H3K 1G6 1.877.937.3003 P. 514.937.3003 F. 514.937.6289
info@lumenpulse.com **www.lumenpulse.com**
© Copyright Lumenpulse 2011

Lumenpulse reserves the right to make changes to this product at any time without prior notice and such modification shall be effective immediately.

lumenpulse™
Sustainable architectural LED lighting systems

THE LIGHTING DESIGN ALLIANCE, INC.

LOS ANGELES
2830 TEMPLE AVENUE
LONG BEACH, CA 90806-2213

T: 562.989.3843
F: 562.989.3847
www.LightingDesignAlliance.com

LIGHTING DESIGN ALLIANCE

Recessed wall luminaires with directed light

Housing: Constructed of die-cast and aluminum with integral wiring compartment. Mounting tabs provided.

Enclosure: One piece die-cast aluminum faceplate. Clear tempered glass; .125" thick, machined flush to faceplate surface. Faceplate is secured by two (2) flush, socket head, stainless steel captive screws threaded into stainless steel inserts in the housing casting. Continuous high temperature, molded silicone rubber gasket for weather tight operation.

Electrical: Provided with a quantity of ten (10) 1 W LEDs, 14.5 total system watts, -30° C start temperature. Integral 120 V or 277 V electronic driver. The LED board and the driver are mounted on a removable plate for easy replacement. LED color temperature is 3300 K. Junction temperature is 74 °. Dimming driver (120 V) is available, please consult factory.

Note: Due to the dynamic nature of LED technology, LED luminaire data on this sheet is subject to change at the discretion of BEGA-US. For the most current technical data, please refer to www.bega-us.com.

Finish: Available in four standard BEGA colors: Black (BLK); White (WHT); Bronze (BRZ); Silver (SLV). To specify, add appropriate suffix to catalog number. Custom colors supplied on special order.

UL listed, suitable for wet locations and for installation within 3 feet of ground. Protection class: IP65.

Type:
BEGA Product:
Project:
Voltage:
Color:
Options:
Modified:

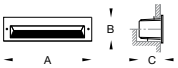

		Lamp	Lumen	A	B	C
2384 LED	ADA	10 W LED	840	12½	2¾	2½

BEGA-US 1000 BEGA Way, Carpinteria, CA 93013 (805) 684-0533 FAX (805) 566-9474 www.bega-us.com
©copyright BEGA-US 2010 Updated 5/10

THE LIGHTING DESIGN ALLIANCE, INC.
LOS ANGELES
2830 TEMPLE AVENUE
LONG BEACH, CA 90806-2213
T: 562.989.3843
F: 562.989.3847
www.LightingDesignAlliance.com

RECESSED LYTESPOT

ARCHITECTURAL LIGHTING WORKS

LIGHTING DESIGN ALLIANCE

TYPE:

Specification and Ordering Information:

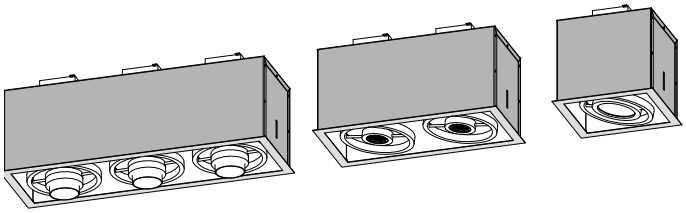

1. Style:

- ❑ RCST - Recessed with trim (RCST)
- ❑ RCS - Recessed trim-less (RCS)

2. Lamp Quantity:

- ❑ 1
- ❑ 2
- ❑ 3

3. Downlight Options:

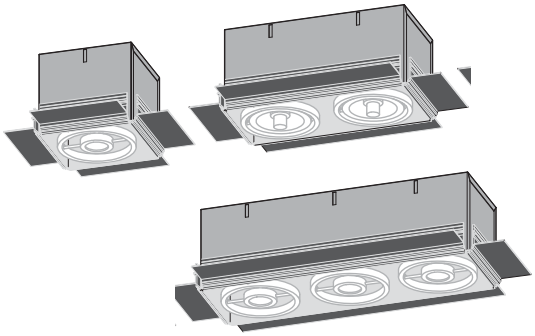

- ❑ MR16: 1x 50 Watt MR16 Halogen (MR16)
- ❑ AR111: 1 x 50/75 Watt AR111 Halogen (AR111)
- ❑ PAR30: 1 x 50/75 Watt Par 30 Halogen (PAR30)
- ❑ S08220: 1 x 22 Watt CDM20 TM BT-5 (S08220)
- ❑ S08235: 1 x 35 Watt CDM35 TM BT-5 (S08235)
- ❑ S11139: 1 x 39 Watt CDM35 TC-T4 (S11139)
- ❑ S11170: 1 x 70 Watt CDM70 TC-T4 (S11170)
- ❑ GX1020: 1 x 20 Watt CMH20/MR16 (GX1020)
- ❑ GX1039: 1 x 39 Watt CMH39/MR16 (GX1039)
- ❑ PAR2039: 1 x 39 Watt CDM35/PAR20 (PAR2039)
- ❑ PAR3039: 1 x 39 Watt CDM35/PAR30L (PAR3039)
- ❑ PAR3070: 1 x 70 Watt CDM70/PAR30L (PAR3070)
- ❑ R11135: 1 x 35 Watt CDM-R111/35 (R11135)
- ❑ R11170: 1 x 70 Watt CDM-R111/70 (R11175)
- ❑ LEDAR111: 1 x 14W Watt AR111-LED 3000K (LEDAR111)
- ❑ CZEN13: Citizen® 1 x 13W Watt LED Module, 950LM, 80CRI, 3000K (CZEN13)
- ❑ CZEN13-0-10V: Citizen® 1 x 13W Watt LED Module, 0-10V Dimming, 950LM, 80CRI, 3000K (CZEN13-0-10V)
- ❑ CZEN13-H: Citizen® 1 x 13W Watt LED Module, Lutron® Hilume A Series Dimming, 950LM, 80CRI, 3000K (CZEN13-H)
- ❑ CZEN18: Citizen® 1 x 18W Watt LED Module, 1000LM, 80CRI, 3000K (CZEN18)
- ❑ CZEN18-0-10V: Citizen® 1 x 18W Watt LED Module, 0-10V Dimming, 1000LM, 80CRI, 3000K (CZEN18-0-10V)
- ❑ CZEN18-H: Citizen® 1 x 18W Watt LED Module, Lutron® Hilume A Series Dimming,1000LM, 80CRI, 3000K (CZEN18-H)
- ❑ **CZEN26: Citizen® 1 x 26W Watt LED Module, 1800LM, 80CRI, 3000K (CZEN26)
- ❑ **CZEN26-0-10V: Citizen® 1 x 26W Watt LED Module, 0-10V Dimming,1800LM, 80CRI, 3000K (CZEN26-0-10V)
- ❑ **CZEN26-H: Citizen® 1 x 26W Watt LED Module, Lutron® Hilume A Series Dimming,1800LM, 80CRI, 3000K (CZEN26-H)
- ❑ XC9030-700: Xicato® 1 x 22W Watt LED *Artist* Module, 700LM, 95CRI, 3000K (XC9030-700)
- ❑ XC9030-700-0-10V: Xicato® 1 x 22W Watt LED *Artist* Module, 0-10V Dimming, 700LM, 95CRI, 3000K (XC9030-700-0-10V)
- ❑ XC9030-700-H: Xicato® 1 x 22W Watt LED *Artist* Module, Lutron® Hilume A Series Dimming, 700LM, 95CRI, 3000K (XC9030-700-H)
- ❑ **XC8030-1300: Xicato® 1 x 22W Watt LED1300LM, 80CRI, 3000K (XC8030-1300)
- ❑ **XC8030-1300-0-10V: Xicato® 1 x 22W Watt LED1300LM, 0-10V Dimming, 80CRI, 3000K (XC8030-1300-0-10V)
- ❑ **XC8030-1300-H: Xicato® 1 x 22W Watt LED1300LM, Lutron® Hilume A Series Dimming, 80CRI, 3000K (XC8030-1300-H)
- ❑ XC8030-1000: Xicato® 1 x 15W Watt LED1000LM, 80CRI, 3000K (XC8030-1300)
- ❑ XC8030-1000-0-10V: Xicato® 1 x 15W Watt LED 0-10V Dimming,1000LM, 80CRI, 3000K (XC8030-1300-0-10V)
- ❑ XC8030-1000-H: Xicato® 1 x 15W Watt LED Lutron® Hilume A Series Dimming,1000LM, 80CRI, 3000K (XC8030-1300-H)
- ❑ **XC8030-2000: Xicato® 1 x 36W Watt LED 2000LM, 80CRI, 3000K (XC8030-2000)
- ❑ **XC8030-2000-0-10V: Xicato® 1 x 36W Watt LED, 0-10V Dimming, 2000LM, 80CRI, 3000K (XC8030-2000-0-10V)
- ❑ **XC8030-2000-H: Xicato® 1 x 36W Watt LED Lutron® Hilume A Series Dimming , 2000LM, 80CRI, 3000K (XC8030-2000-H)
- ❑ LEDMR16: 1 x 6 Watt MR16 LED-*120V Triac Dimming only. 277 will not dim*(LEDMR16)
- ❑ *LED1525: Edison® 1 x 15 Watt LED 25° 3000K (LED1525)
- ❑ *LED1525-0-10V: Edison® 1 x 15 Watt LED, 0-10V Dimming, 540LM, 25° 3000K (LED1525-0-10V)
- ❑ *LED1525-H: Edison® 1 x 15 Watt LED, 0-10V Lutron® Hilume A Series, 540LM, 25° 3000K (LED1525-H)
- ❑ *LED1540: Edison® 1 x 15 Watt LED, 540LM 3500K (LED1540)
- ❑ *LED1540-0-10V: Edison® 1 x 15 Watt LED, 0-10V Dimming, 540LM, 40° 3000K (LED1540-0-10V)
- ❑ *LED1540-H: Edison® 1 x 15 Watt LED, Lutron® Hilume A SeriesDimming, 540LM, 25° 3000K (LED1540-H)

*No Accessory Options Available

**Denotes Active Cooling Mechanism (Synjet Fan) required: Internal to unit.

For Additional LED options not listed, please consult LED MATRIX online, or Factory.

3a: LED Driver (Select only if using LED option):

- ❑ INT - Integral (INT)
- ❑ REM - Remote (REM)

*LED drivers can be integral or remote. An integral driver will power one unit.

4. Beam Spread (Reflector Only):

- ❑ F - Flood (F)
- ❑ N - Narrow Flood (NF)
- ❑ S - Spot (S)

Continued on Next Page...

Architectural Lighting Works reserves the right to make changes to fixture design, finish and engineering at any time.

www.archltgworks.com

THE LIGHTING DESIGN ALLIANCE, INC.

LOS ANGELES
2830 TEMPLE AVENUE
LONG BEACH, CA 90806-2213

T: 562.989.3843
F: 562.989.3847
www.LightingDesignAlliance.com

ARCHITECTURAL LIGHTING WORKS

TYPE:

LIGHTING DESIGN ALLIANCE

5. Accessory Option:

- ❑ HEX - Hexcell Louvers (HEX)
- ❑ SNOOT - Snoot (SNT)
- ❑ SOLITE - Solite Lens (SOL)
- ❑ LSS - Linear Spread Lens (LSS)
- ❑ **GC - Glare Cap (GC)

**Not Available in LED Options

6. Voltage:

- ❑ 120 - 120 volt (120)
- ❑ 277 - 277 volt (277)
- ❑ *347 - 347 volt (347)

*For LED in 347V, consult factory, limitations exist.

7. Finish:

- ❑ * BK/AL (Aluminum trim / Black interior/ Aluminum Gimbal Rings)
- ❑ AL/AL (Aluminum trim / Aluminum interior/Aluminum Gimbal Rings)
- ❑ BK/BK (Black trim / Black interior/ Black Gimbal Rings)
- ❑ BK/BK/AL (Black trim / Black interior/ Aluminum Gimbal Rings)
- ❑ WH/BK (White trim / Black interior/ Black Gimbal Rings)
- ❑ WH/WH/ (White trim / White interior/ White Gimbal Rings)
- ❑ WH/WH/AL (White trim / White interior/ Aluminum Gimbal Rings)
- ❑ RAL/AL (Specify RAL # of powdercoat of your choice/ Aluminum Gimbal RIngs)
- ❑ RAL/RAL(Specify RAL # of powdercoat of your choice/ RAL Gimbal RIngs)

* BK/AL is standard on all Lytespot housings and trims
If TRIMLESS is specified, disregard trim color.

RCST (Trim)

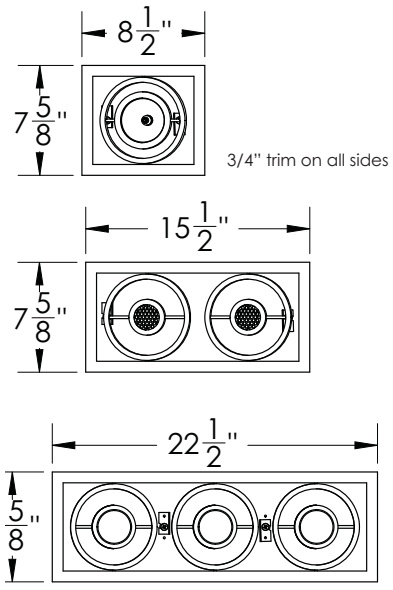

For installation in grid or drywall ceiling.
Installation instructions at www.archltgworks.com

Design Specifications

Construction
20 ga CRS housing.
Black standard in interior housing
Reflectors are spun and polished aluminum
Electrical Details
All Ballasts are Electronic <10% THD (where applicable)
Class P electronic ballasts
Standard and dimming ballasts are integral to housing (unless otherwise noted - where applicable))
Low voltage transformers are individual 75W units (277V/12V or 120/12V)
Additional LED options available (consult factory)
ETL Listed
Indoor Location Only
Emergency
No Emergency Options
Finish
AL trim is a supersonic chrome powdercoat finish.
Powder Coat options are available. Consult factory.

Continued on Next Page...

Architectural Lighting Works reserves the right to make changes to fixture design, finish and engineering at any time.

THE LIGHTING DESIGN ALLIANCE, INC.

LOS ANGELES
2830 TEMPLE AVENUE
LONG BEACH, CA 90806-2213

T: 562.989.3843
F: 562.989.3847
www.LightingDesignAlliance.com

ARCHITECTURAL LIGHTING WORKS

LIGHTING DESIGN ALLIANCE

RCS (Trim-less)

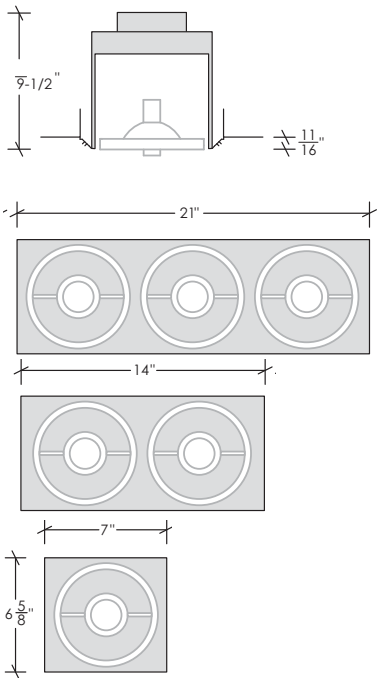

RCS (Trim-less) - Extruded drywall mudding and structural flange (integral to trim-less unit). Mud to edges for trim-less applications.

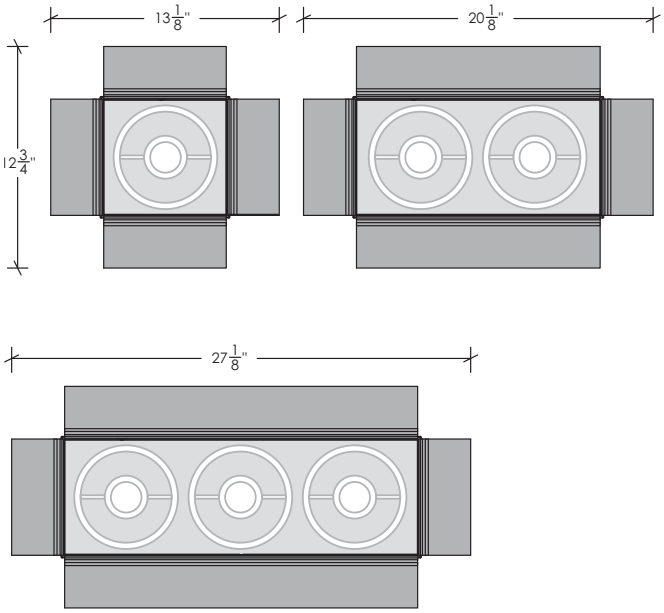

Colors and Finishes:

STANDARD: "Ulti-matte" Natural aluminum : A two step, clear anodizing process that gives and durable surface.

OPTION: Black - BK powdercoat

OPTION: White - WH powdercoat

RAL

OPTION: RAL - powdercoat the RAL color of your choice. Specify RAL code.

Lamp Shielding Accessories:

Hexcel Louver (HEX)

Linear Spread Lens (LSS)

Solite Lens (SOL)

Bladed Louver (BLV)

Snoot (SNOOT)

Note: Accessories are not universal. Please consult specification sheets online for lamp compatibility.

Architectural Lighting Works reserves the right to make changes to fixture design, finish and engineering at any time.

www.archltgworks.com

THE LIGHTING DESIGN ALLIANCE, INC.

LOS ANGELES
2830 TEMPLE AVENUE
LONG BEACH, CA 90806-2213

T: 562.989.3843
F: 562.989.3847
www.LightingDesignAlliance.com

LIGHTING DESIGN ALLIANCE

vode

100 Series

MLR Sidekick System

VodeRail & Bee+Rail T5

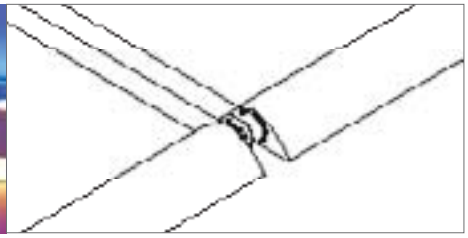

100 Series MLR SideKick System for T5HE or T5HO fluorescent. Stack or suspension mount. Single-sided or double-sided option. 2'(61cm) – 8'(244cm) lengths, depending on lamp and rail type. Quick-connect wiring harness standard. Patented hub design with 370° rotation, angle-gauge and lock-screw. Brushed aluminum finish standard.

WingRail

QueRail with slots

THE LIGHTING DESIGN ALLIANCE, INC.

LOS ANGELES
2830 TEMPLE AVENUE
LONG BEACH, CA 90806-2213

T: 562.989.3843
F: 562.989.3847
www.LightingDesignAlliance.com

TYPE

WF1, WF1a, WF2, WF2a

100 Series

MLR SideKick System

VodeRail & **Bee**+Rail **T5** - Example Configurations

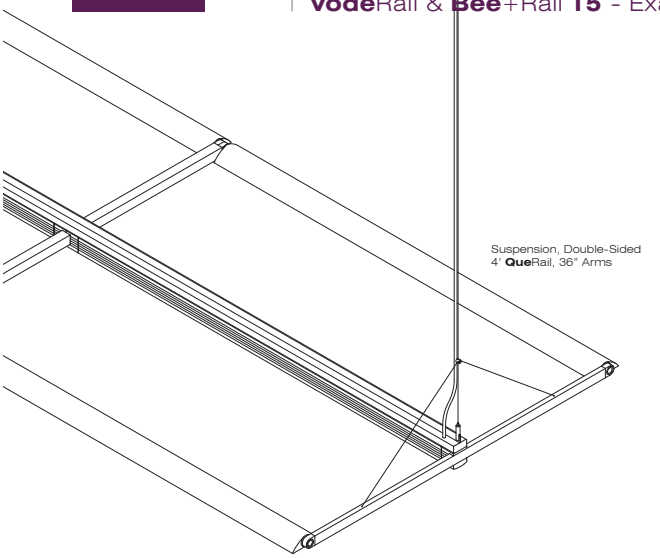

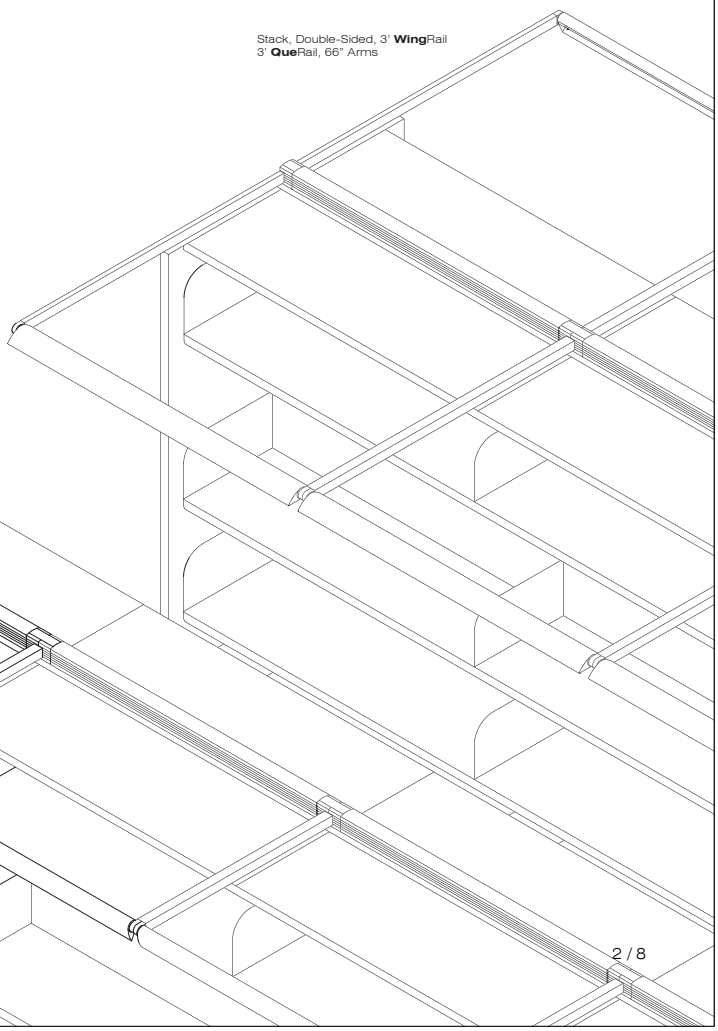

www.vode.com

THE LIGHTING DESIGN ALLIANCE, INC.

LOS ANGELES
2830 TEMPLE AVENUE
LONG BEACH, CA 90806-2213

T: 562.989.3843
F: 562.989.3847
www.LightingDesignAlliance.com

TYPE

WF1, WF1a, WF2, WF2a

100 Series

MLR SideKick System

VodeRail & Bee+Rail T5 - Rail Types

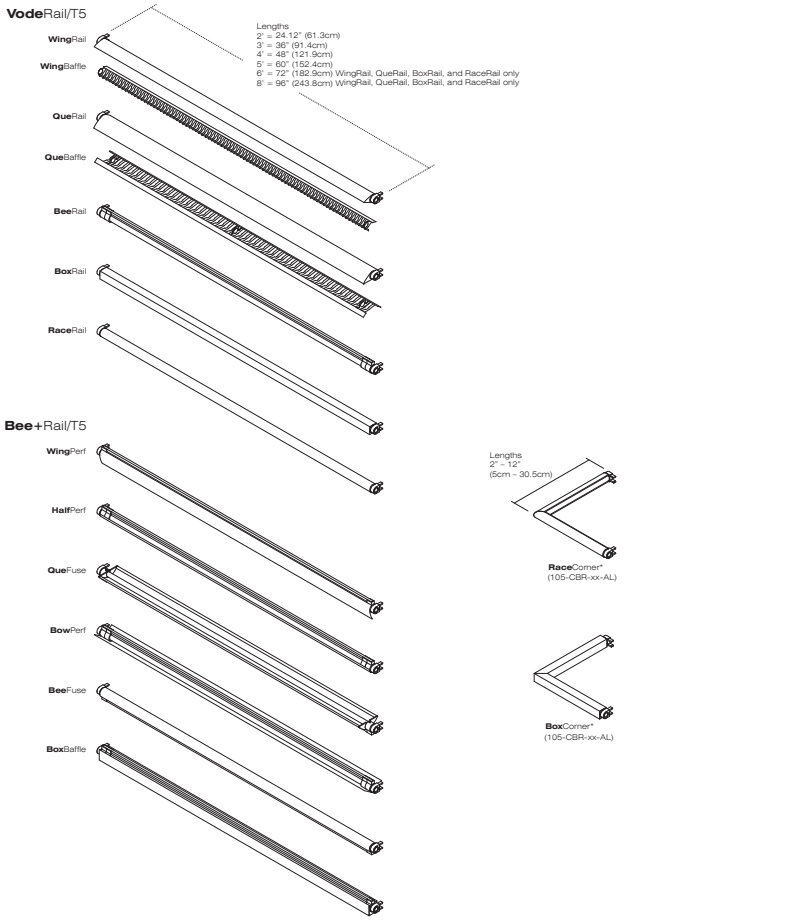

*Not an illuminated product.
*Must be specified separately from System Specification Code.

THE LIGHTING DESIGN ALLIANCE, INC.
LOS ANGELES
2830 TEMPLE AVENUE
LONG BEACH, CA 90806-2213
T: 562.989.3843
F: 562.989.3847
www.LightingDesignAlliance.com

TYPE
WF1, WF1a, WF2, WF2a

100 Series

MLR SideKick System

VodeRail & **Bee**+Rail **T5** System Components

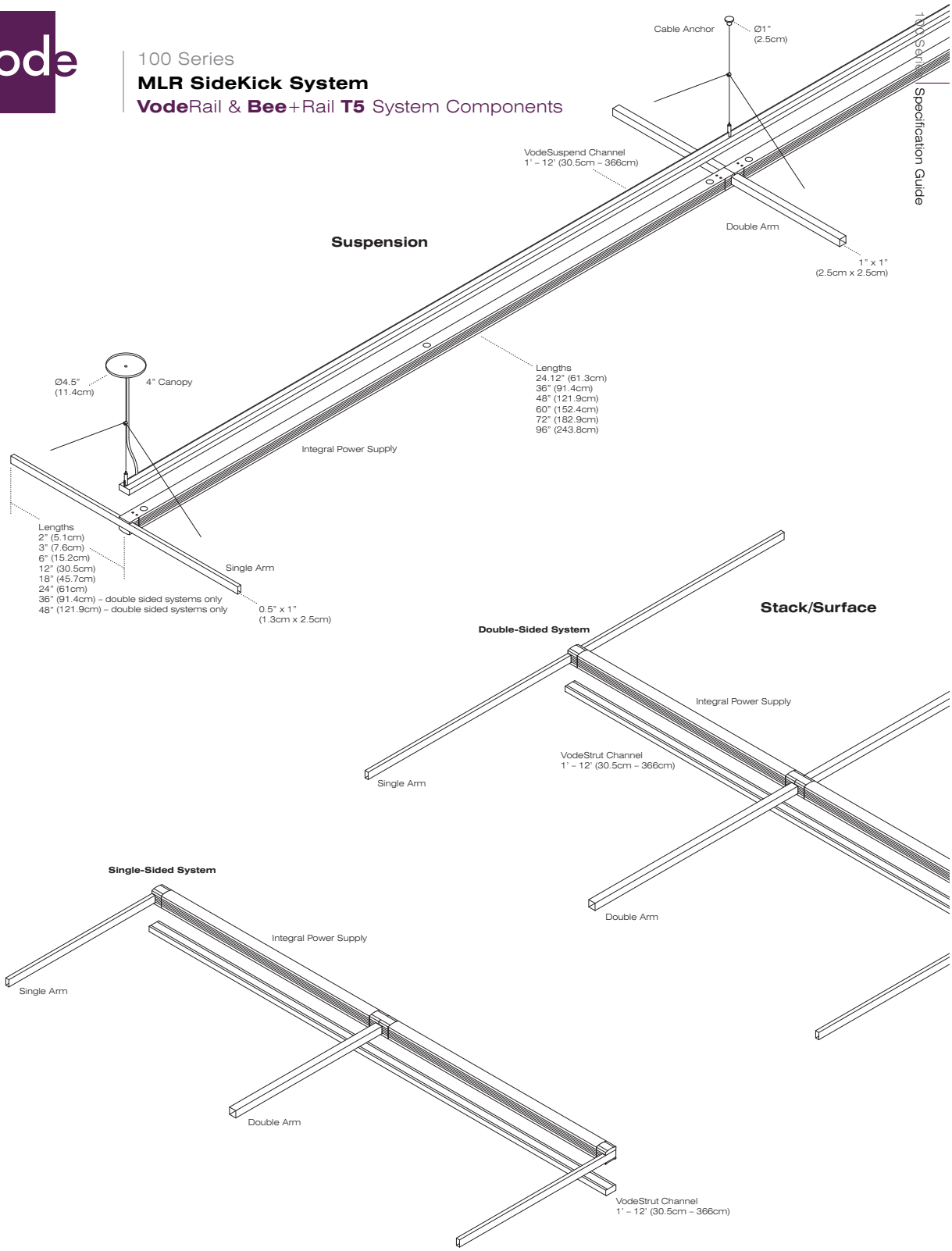

LIGHTING DESIGN ALLIANCE

THE LIGHTING DESIGN ALLIANCE, INC.
LOS ANGELES
2830 TEMPLE AVENUE
LONG BEACH, CA 90806-2213
T: 562.989.3843
F: 562.989.3847
www.LightingDesignAlliance.com

LIGHTING DESIGN ALLIANCE

vode

100 Series

MLR SideKick System

VodeRail **T5** - Specification Sheet

Specification Code

Rail Type	Single/Double Rail	Layout	Mounting	Arm/Cord Length	Ballast Location	Ballast Type/Voltage	Emergency Ballast	Lamp Type	Finish	Lens/Baffle	Options
1	2	3	4	5	IB	7	8	9	10	11	12

1	Rail Type **BE Bee**Rail **BX Box**Rail **QU Que**Rail **RR Race**Rail **WG Wing**Rail
2	Single/Double Rail **K1** single-sided **K2** double-sided
3	Layout See Layout Chart on page 142. Choose length (in feet) and corresponding "A" or "B" layout. "A" and "B" are common layouts. If "A" or "B" layouts are not desired, choose "C" (Custom Layout) and specify desired layout. Please note that **Bee**Rail is limited to 5' maximum length.
4	Mounting **ST** stack/surface **SV** stack/surface with **Vode**Strut **SS** suspension* *available for double-sided (**K2**) systems only Standard suspension hardware includes **Vode**Suspend Channel, 6' power cord, cable and 4.5" jbox cover.
5	Arm/Cord Length **2** 2" arm **3** 3" arm **6** 6" arm **12** 12" arm **18** 18" arm **24** 24" arm **36** 36" arm* **48** 48" arm* (maximum) **60** 60" cable/cord **XX** custom length *single-sided (**K1**) arms cannot exceed 24". Arm length is calculated from center of ballast housing.
6	Ballast Location **IB** integral ballast
7	Ballast Type **A** programmed start **B** 10% dimming – Lutron Eco-10 **C** 1% dimming – Lutron Hi-lume **D** 1% DALI dimming – Osram **E** 10% DALI dimming – Lutron Ecosystem **F** 1% dimming (0 – 10v) **G** bi-level dimming **H** 1% DALI dimming – Lutron Hi-Lume 3D **X** other (specify) Maximum remote distance from 2' to 18' depending on ballast type. See Ballast Chart on page 144. Voltage **1** 120v **2** 277v **3** 347v **4** 220v
8	Emergency Ballast **0** none **X** indicate number of emergency ballasts required Emergency ballast not available with 2' & 3' Rail sections.
9	Lamp Type **HE** high efficiency T5 2' = 14w 5' = 35w 3' = 21w 6' = (2) 21w 4' = 28w 8' = (2) 28w **HO** high output T5 2' = 24w 5' = 80w 3' = 39w 6' = (2) 39w 4' = 54w 8' = (2) 54w
10	Finish **A** brushed aluminum (standard) **WH** white powdercoat **BL** black anodized
11	Lens/Baffle **0** none **B** cross baffle** **1** prismatic lens* **S** indirect† Please refer to **Bee**+Rail specification guide for accessory reflectors for **Bee**Rail. *option for **QU** and **WG** only, standard for **RR** and **BX** **option for **QU** and **WG** only †option for **WG**, **BX** and **QU** only
12	Options **0** none **1** on/off toggle switch **2** daylight sensor **3** occupancy sensor **F** GLR fuse **L** lamps provided (specify color temperature) **CP6** 6' 14/3 clear power cord and plug **EP** conduit adapter for end power feed

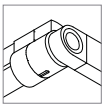
BeeRail

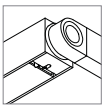
BoxRail

QueRail

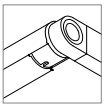
RaceRail

WingRail

THE LIGHTING DESIGN ALLIANCE, INC.
LOS ANGELES
2830 TEMPLE AVENUE
LONG BEACH, CA 90806-2213
T: 562.989.3843
F: 562.989.3847
www.LightingDesignAlliance.com

TYPE
WF1, WF1a, WF2, WF2a

LIGHTING DESIGN ALLIANCE

100 Series

MLR Sidekick System

VodeRail & Bee+Rail T5

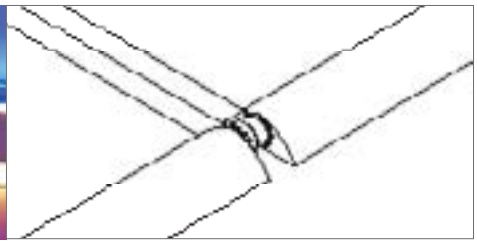

100 Series MLR SideKick System for T5HE or T5HO fluorescent. Stack or suspension mount. Single-sided or double-sided option. 2'(61cm) – 8'(244cm) lengths, depending on lamp and rail type. Quick-connect wiring harness standard. Patented hub design with 370° rotation, angle-gauge and lock-screw. Brushed aluminum finish standard.

WingRail

QueRail with slots

THE LIGHTING DESIGN ALLIANCE, INC.

LOS ANGELES
2830 TEMPLE AVENUE
LONG BEACH, CA 90806-2213

T: 562.989.3843
F: 562.989.3847
www.LightingDesignAlliance.com

100 Series

MLR SideKick System

VodeRail & **Bee**+Rail **T5** - Example Configurations

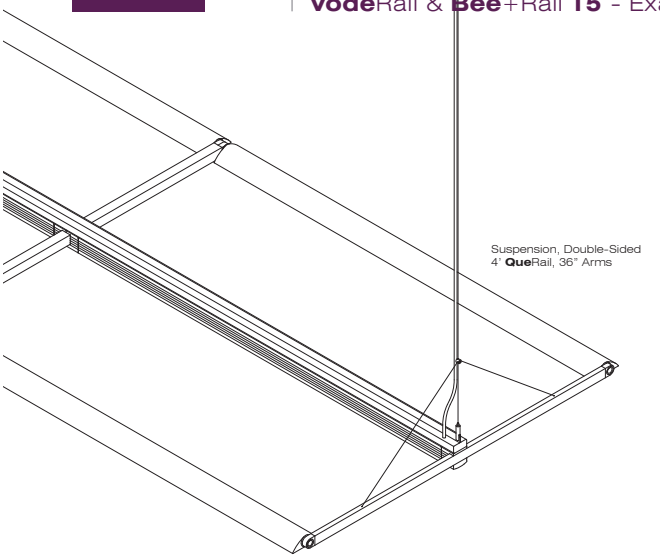

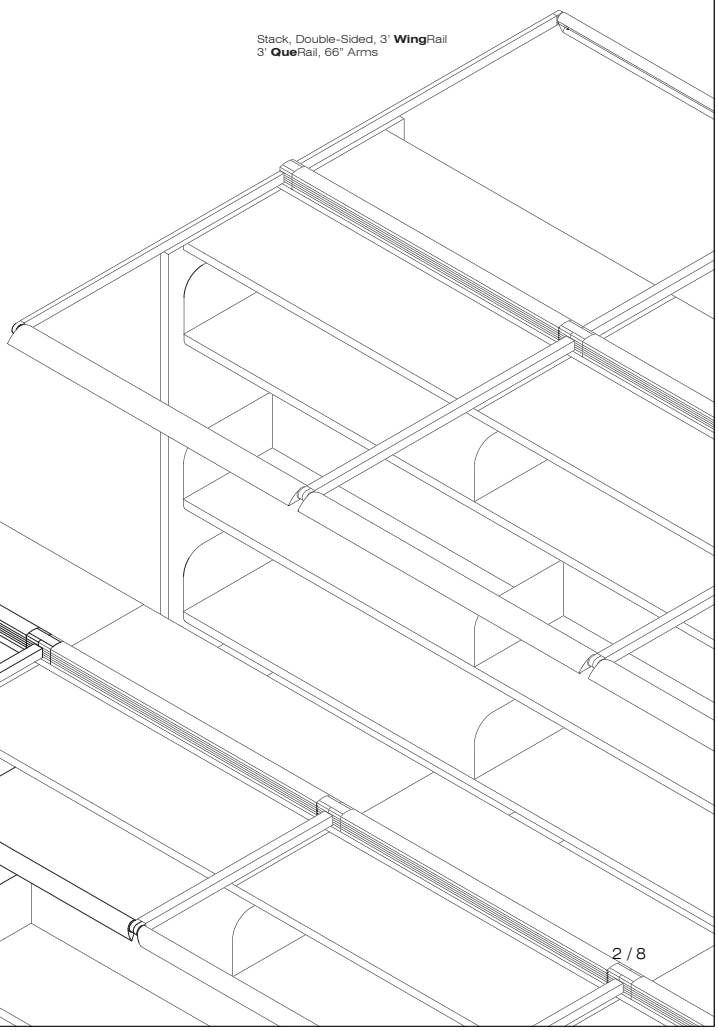

www.vode.com

THE LIGHTING DESIGN ALLIANCE, INC.

LOS ANGELES
2830 TEMPLE AVENUE
LONG BEACH, CA 90806-2213

T: 562.989.3843
F: 562.989.3847
www.LightingDesignAlliance.com

TYPE
WF3, WF3a

100 Series

MLR SideKick System

VodeRail & Bee+Rail T5 - Rail Types

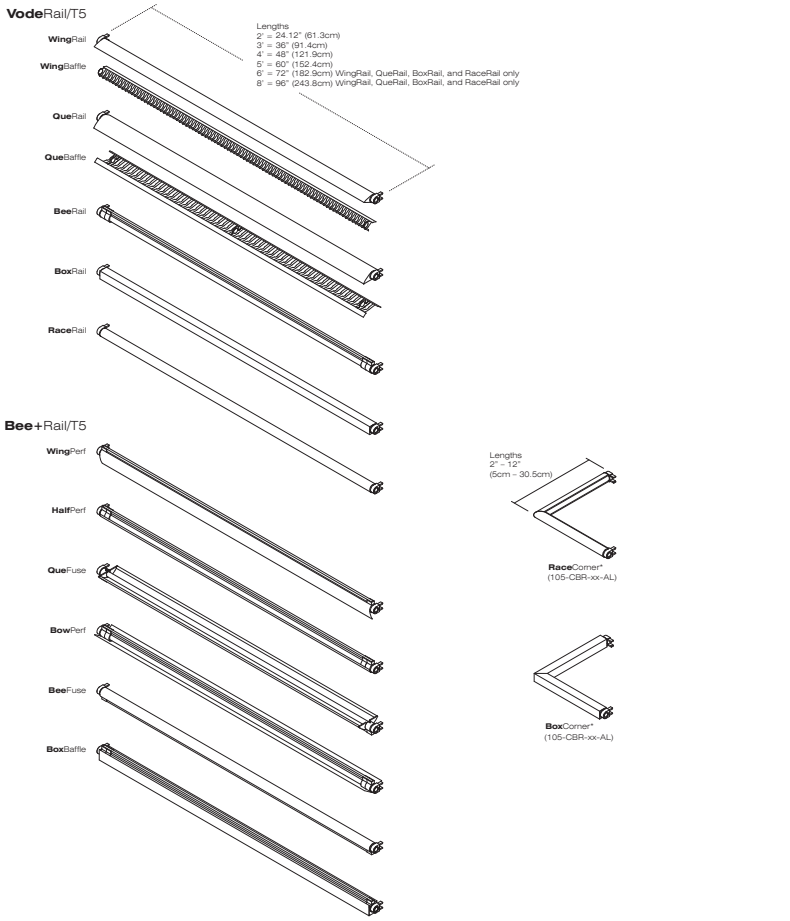

*Not an illuminated product.
*Must be specified separately from System Specification Code.

THE LIGHTING DESIGN ALLIANCE, INC.
LOS ANGELES
2830 TEMPLE AVENUE
LONG BEACH, CA 90806-2213
T: 562.989.3843
F: 562.989.3847
www.LightingDesignAlliance.com

TYPE
WF3, WF3a

100 Series

MLR SideKick System

VodeRail & **Bee**+Rail **T5** System Components

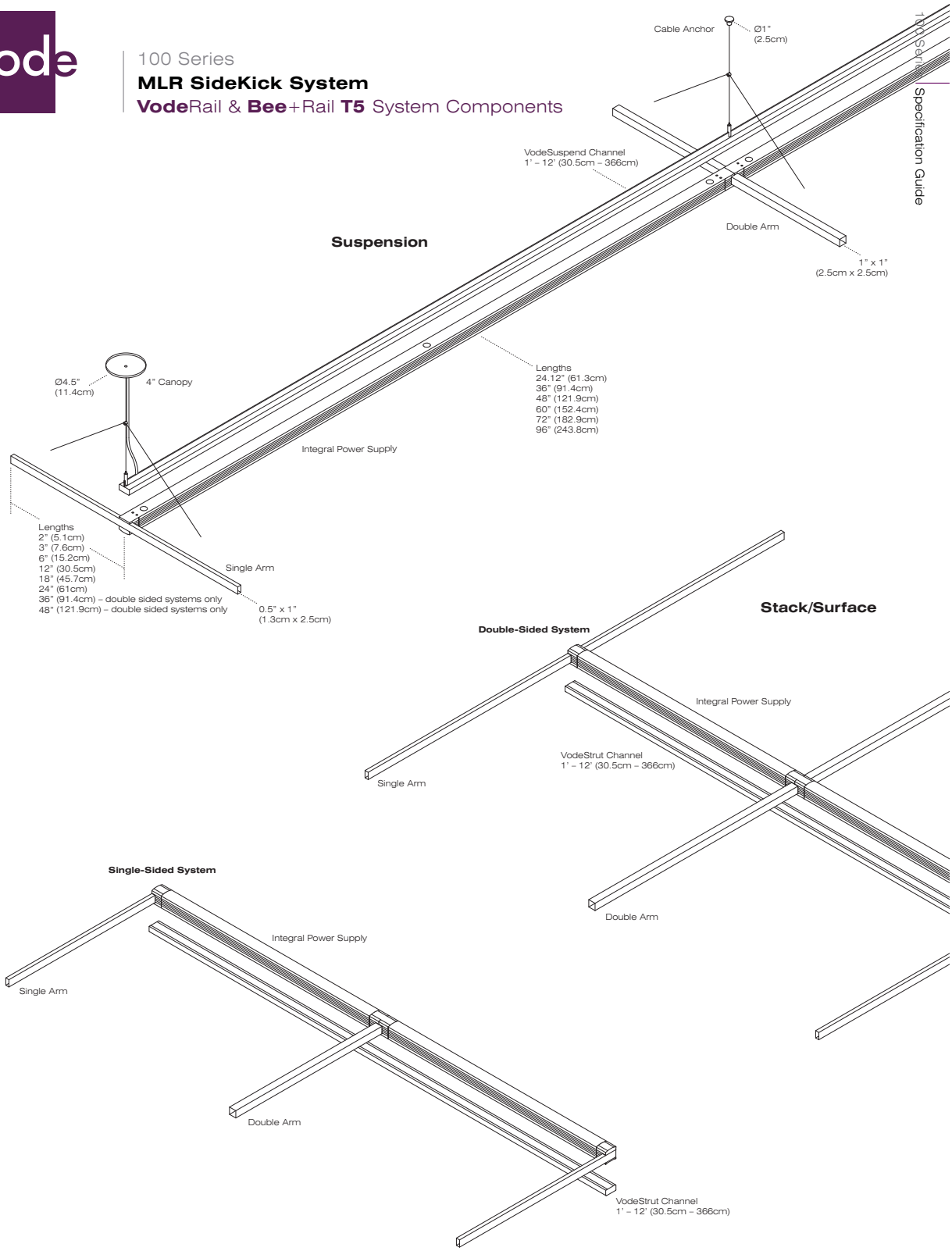

LIGHTING DESIGN ALLIANCE

THE LIGHTING DESIGN ALLIANCE, INC.
LOS ANGELES
2830 TEMPLE AVENUE
LONG BEACH, CA 90806-2213
T: 562.989.3843
F: 562.989.3847
www.LightingDesignAlliance.com

LIGHTING DESIGN ALLIANCE

100 Series

MLR SideKick System

VodeRail T5 - Specification Sheet

Specification Code	Rail Type	Single/Double Rail	Layout	Mounting	Arm/Cord Length	Ballast Location	Ballast Type/Voltage	Emergency Ballast	Lamp Type	Finish	Lens/Baffle	Options
	1	2	3	4	5	IB	7	8	9	10	11	12

1	Rail Type **BE** **Bee**Rail **BX** **Box**Rail **QU** **Que**Rail **RR** **Race**Rail **WG** **Wing**Rail
2	Single/Double Rail **K1** single-sided **K2** double-sided
3	Layout See Layout Chart on page 142. Choose length (in feet) and corresponding "A" or "B" layout. "A" and "B" are common layouts. If "A" or "B" layouts are not desired, choose "C" (Custom Layout) and specify desired layout. Please note that **Bee**Rail is limited to 5' maximum length.
4	Mounting **ST** stack/surface **SV** stack/surface with **Vode**Strut **SS** suspension* *available for double-sided (**K2**) systems only Standard suspension hardware includes **Vode**Suspend Channel, 6' power cord, cable and 4.5" jbox cover.
5	Arm/Cord Length **2** 2" arm **3** 3" arm **6** 6" arm **12** 12" arm **18** 18" arm **24** 24" arm **36** 36" arm* **48** 48" arm* (maximum) **60** 60" cable/cord **XX** custom length *single-sided (**K1**) arms cannot exceed 24". Arm length is calculated from center of ballast housing.
6	Ballast Location **IB** integral ballast
7	Ballast Type **A** programmed start **B** 10% dimming – Lutron Eco-10 **C** 1% dimming – Lutron Hi-lume **D** 1% DALI dimming – Osram **E** 10% DALI dimming – Lutron Ecosystem **F** 1% dimming (0 – 10v) **G** bi-level dimming **H** 1% DALI dimming – Lutron Hi-Lume 3D **X** other (specify) Maximum remote distance from 2' to 18' depending on ballast type. See Ballast Chart on page 144. Voltage **1** 120v **2** 277v **3** 347v **4** 220v
8	Emergency Ballast **0** none **X** indicate number of emergency ballasts required Emergency ballast not available with 2' & 3' Rail sections.
9	Lamp Type **HE** high efficiency T5 2' = 14w 5' = 35w 3' = 21w 6' = (2) 21w 4' = 28w 8' = (2) 28w **HO** high output T5 2' = 24w 5' = 80w 3' = 39w 6' = (2) 39w 4' = 54w 8' = (2) 54w
10	Finish **A** brushed aluminum (standard) **WH** white powdercoat **BL** black anodized
11	Lens/Baffle **0** none **B** cross baffle** **1** prismatic lens* **S** indirect† Please refer to **Bee**+Rail specification guide for accessory reflectors for **Bee**Rail. *option for **QU** and **WG** only, standard for **RR** and **BX** **option for **QU** and **WG** only †option for **WG**, **BX** and **QU** only
12	Options **0** none **1** on/off toggle switch **2** daylight sensor **3** occupancy sensor **F** GLR fuse **L** lamps provided (specify color temperature) **CP6** 6' 14/3 clear power cord and plug **EP** conduit adapter for end power feed

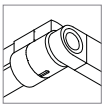
BeeRail

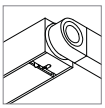
BoxRail

QueRail

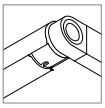
RaceRail

WingRail

THE LIGHTING DESIGN ALLIANCE, INC.
LOS ANGELES
2830 TEMPLE AVENUE
LONG BEACH, CA 90806-2213
T: 562.989.3843
F: 562.989.3847
www.LightingDesignAlliance.com

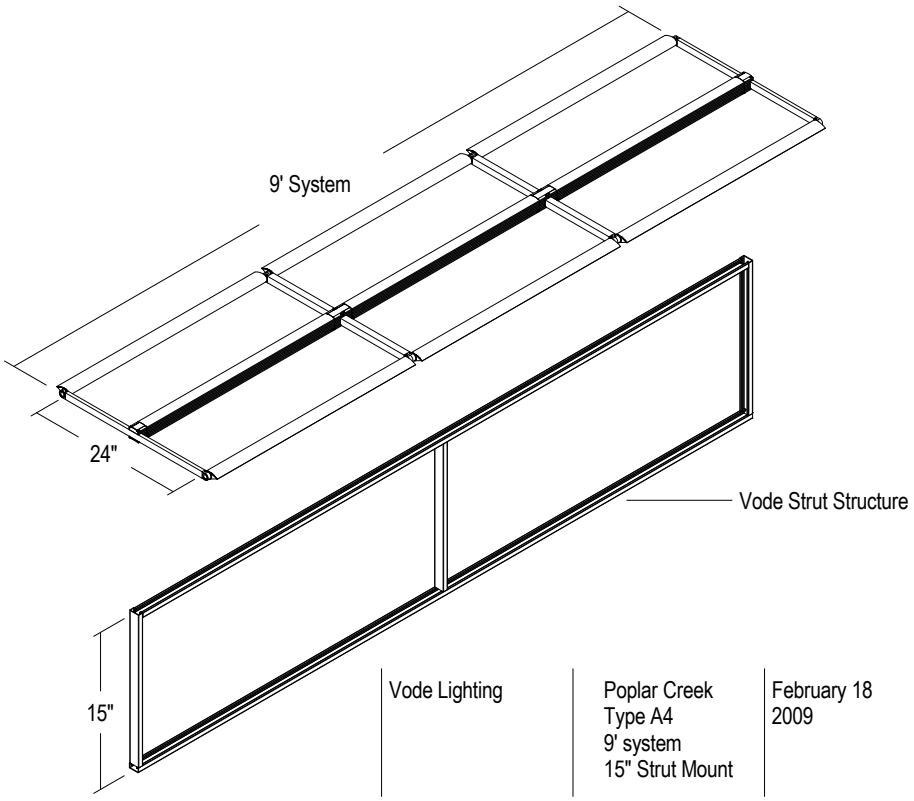

Vode Lighting	Poplar Creek Type A4 9' system 15" Strut Mount	February 18 2009	unit: in scale: 1:20

Product code:
WG-24-9A-K2-00-IB-A-0-ST-A-0-0
Vode stack-mounted SideKick system - two-sided, 9' long, comprised of (3) 3' Rail on each side, 24" arms (12" arm length on each side), integral programmed start ballast, standard output, aluminum finish, 14' cord and plug, power harness, fusing, plus custom Vode strut structure for vertical mounting.

Vode Lighting LLC 1206 East MacArthur Street Suite 3 Sonoma, CA 95476 T 707 996 9898 F 707 996 9797 www.vode.com

Copyright 2008 All ideas, arrangements, and plans indicated or represented by the above drawings, are the property of Vode Lighting LLC. and were created, evolved, and developed for use on and in connection with the specified project. No part of the obove drawing, design, arrangements or ideas thereon shall be duplicated or used for any purpose whatsoever without the express permission of Vode Lighting, LLC.

THE LIGHTING DESIGN ALLIANCE, INC.
LOS ANGELES
2830 TEMPLE AVENUE
LONG BEACH, CA 90806-2213
T: 562.989.3843
F: 562.989.3847
www.LightingDesignAlliance.com

369-262c 1 06.23.2011

LIGHTING DESIGN ALLIANCE

Radio Powr Savr™ Wireless Daylight Sensor

Lutron's wireless daylight sensor is a battery-powered sensor that automatically controls lights via RF communication to compatible dimming or switching devices. This sensor mounts to the ceiling and measures light in the space. The sensor then wirelessly transmits the light level to the associated dimming or switching devices that automatically control the lights to balance light level in the space. The sensor combines both convenience and exceptional energy savings along with ease of installation.

Features

- Utilizes ClearConnect™ technology.
- Daylight compensation through Lutron's reliable open loop control.
- Light range 0–107,000 Lux (0-10,000 fc).
- Designed to give a linear response to changes in viewed light level.
- Wireless daylight sensor has simple calibration.
- One sensor can be associated to up to 10 compatible RF dimming and switching devices allowing for switching, stepped dimming, and continuous dimming of multiple zones.
- Intuitive test mode provides instant system verification.
- 10-year battery life.
- Multiple ceiling mount methods available for different ceiling materials.
- Works seamlessly with Radio Powr Savr™ occupancy sensors and Pico® wireless controls.
- Front accessible test buttons make setup easy.
- RoHS compliant.

Model Number:

LRFX-DCRB-XX

Color Code

Frequency / Channel Code

Frequency / Channel Codes:

2 = 433.0 - 437.0 MHz (US, Canada, Mexico)
3 = 868.125 - 869.850 MHz (Europe)
4 = 868.125 - 868.475 MHz (China)
5 = 865.5 - 866.5 MHz (India)
7 = 433.0 - 437.79 MHz (Hong Kong)

Color Codes:

WH = White

Contact Lutron Customer Service at www.lutron.com for frequency/channel code compatibility with your particular geographic region, and for integrating with other Lutron® lighting and shading products.

Compatible RF Devices:

- For use with Lutron® products only
- Communicates to the following wireless Lutron® systems:
  - GRAFIK Eye® QS Wireless
  - Rania® Wireless RF Switch (LRF 3, 4, 5 & 7 Only)
  - Energi Savr Node™ QS (with QSM on QS Link)
  - Maestro Wireless® (LRF 2 Only)
  - Quantum® Systems

LUTRON® SPECIFICATION SUBMITTAL Page

Job Name:	Model Numbers:
Job Number:	

THE LIGHTING DESIGN ALLIANCE, INC.
LOS ANGELES
2830 TEMPLE AVENUE
LONG BEACH, CA 90806-2213
T: 562.989.3843
F: 562.989.3847
www.LightingDesignAlliance.com

Specifications

Regulatory

Lutron® Quality Systems Registered to ISO 9001:2008.

LRF2-

- FCC Approved. Complies with the limits for a Class B digital device. Persuant to Part 15 of the FCC Rules.
- IC (RSS-210).
- SCT.
- Meets CAA Title 24 requirements.

LRF3-

- CE - Marked (European Union).
- TRA Type Approved (United Arab Emirates).

LRF4-

- SRRC Type Approved (Mainland China).
- iDA Registered (Singapore).

LRF5-

- WPC Type Approved (India).

LRF7-

- FCC Approved. Complies with the limits for a Class B digital device. Persuant to Part 15 of the FCC Rules.
- Approved under OFTA short range device class license.

Power/Performance

- Operating voltage: 3 V⎓
- Operating current: 7 µA
- Requires one CR 2450 lithium battery.
- 10-year battery life.
- Non-volatile memory. (settings are stored during power loss)

Enviroment

- Temperature: 32 °F to 104 °F (0 °C to 40 °C).
- For indoor use only.
- Relative humidity: < 90% non-condensing

Range

- Local load controls must be located within 60 ft (18 m) line of sight, or 30 ft (9 m) through walls, of a daylight sensor.

Dimensions

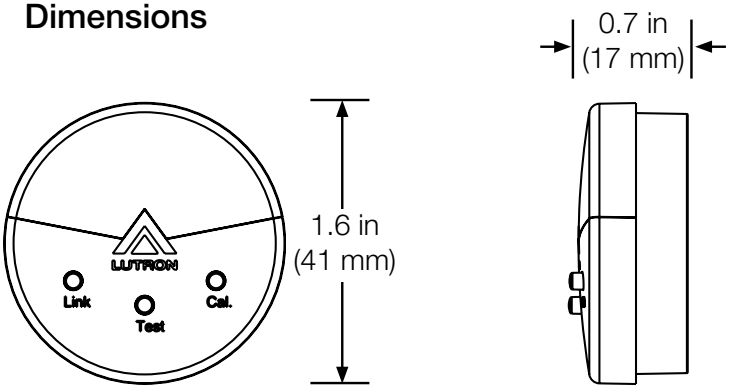

LUTRON® SPECIFICATION SUBMITTAL Page

Job Name:	Model Numbers:
Job Number:	

THE LIGHTING DESIGN ALLIANCE, INC.

LOS ANGELES
2830 TEMPLE AVENUE
LONG BEACH, CA 90806-2213

T: 562.989.3843
F: 562.989.3847
www.LightingDesignAlliance.com

Mounting

Location for average size areas

Arrow points towards the area viewed by the sensor (towards windows).

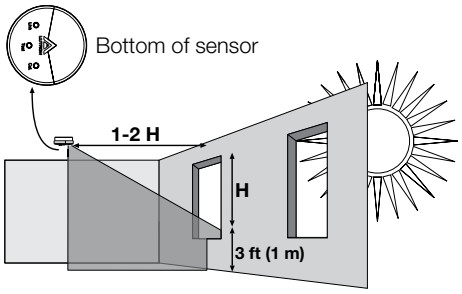

H = Effective Window Height

Location for narrow areas (corridors, private offices)

Arrow points towards the area viewed by the sensor (away from window)

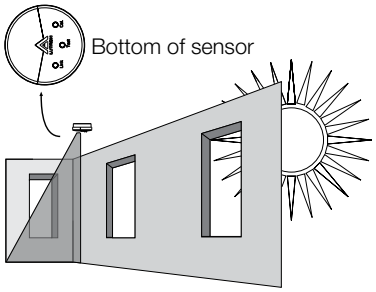

Installation

Determine the Daylight Sensor mounting location using the diagrams at left:

- The arrow on the daylight sensor points toward the area viewed by the sensor.
- Place the daylight sensor so its arrow is pointed at the nearest window at a distance from the window of one to two times the effective window height (H).
- The effective window height (H) starts at the window sill or 3 ft (1 m) up from the floor, whichever is higher, and ends at the top of the window.
- Ensure that the view of the daylight sensor is not obstructed.
- Do not position the daylight sensor above an electric light that shines up at the ceiling or at the sensor.
- Do not position the daylight sensor in the well of a skylight or above indirect lighting fixtures.
- For narrow areas where the daylight sensor cannot be placed 1-2 (H) from windows, place sensor near windows facing into the space.
- Mount Sensor(s) away from large metal surfaces (e.g. light fixtures or metal-backed ceiling tiles). Metal objects will affect the Sensor's RF performance.

Daylight Sensor Communication

- A sensor can communicate with up to 10 local load devices.
- A single local load device or zone can have only one daylight sensor communicate to it.

LUTRON® SPECIFICATION SUBMITTAL Page

Job Name:	Model Numbers:
Job Number:	

THE LIGHTING DESIGN ALLIANCE, INC.
LOS ANGELES
2830 TEMPLE AVENUE
LONG BEACH, CA 90806-2213
T: 562.989.3843
F: 562.989.3847
www.LightingDesignAlliance.com

Model comparison

GRAFIK Eye® QS

Now with Clear Connect RF Technology™, GRAFIK Eye QS enables reliable communication with Lutron® light and shade control products in a space.

- Eliminates the need to run communication wiring to shades, sensors and additional GRAFIK Eye QS units
- Available in 3-, 4-, and 6-zone configurations
- Integral phase control dimmers provide control of incandescent/halogen, magnetic low-voltage, Lutron Tu-Wire® fluorescent dimming ballasts, and non-dimmed lighting loads
- Wired-only options available

GRAFIK Eye QS with EcoSystem®

The GRAFIK Eye QS with EcoSystem combines the flexibility and scalability of the standard model with the additional benefit of an integral EcoSystem bus supply.

- Direct connection to Lutron digital fluorescent ballasts and LED drivers
- Available in 6-, 8-, and 16-zone configurations
- Wired-only options available

LIGHTING DESIGN ALLIANCE

PICO PUBLIC LIBRARY FEBRUARY 21, 2012 LIGHTING CATALOG PAGE

THE LIGHTING DESIGN ALLIANCE, INC.
LOS ANGELES
2830 TEMPLE AVENUE
LONG BEACH, CA 90806-2213
T: 562.989.3843
F: 562.989.3847
www.LightingDesignAlliance.com

1B
1-button

2B
2-button

3B
3-button

5B
5-button

7B
7-button

2BRL
2-button with raise/lower

3BRL
3-button with raise/lower

5BRL
5-button with raise/lower

2BRLIR
2-button with IR receiver and raise/lower

3BRLIR
3-button with IR receiver and raise/lower

5BRLIR
5-button with IR receiver and raise/lower

1RLD
Dual with 3-button and 2-button with raise/lower

2RLD
Dual 2-button with raise/lower

3BD
Dual 3-button

THE LIGHTING DESIGN ALLIANCE, INC.
LOS ANGELES
2830 TEMPLE AVENUE
LONG BEACH, CA 90806-2213
T: 562.989.3843
F: 562.989.3847
www.LightingDesignAlliance.com

SECTION 27 40 00 - AUDIO-VIDEO COMMUNICATIONS

PART 1 - GENERAL

1.1 SUMMARY

A. Provisions of Division 1 apply to this section.

B. Section Includes
1. Provide all labor, materials, transportation and equipment to complete the furnishing, installation, assembly, set up, and testing of the Audio, Video and Control Systems work indicated on the drawings and specified herein. Notwithstanding any detailed information in this Section, provide complete, working systems. General design intent for this project is shown on the drawings and described in the specification.
2. All equipment requiring coordination with other trades must be tested and verified for proper operation. Contractor is fully responsible for the coordination and must resolve all conflicts with AV equipment that connect or interact with other systems.
3. Design, engineer and provide complete means of support, suspension, attachment, fastening, bracing, and seismic restraints (hereinafter "support") of the Work of this Section, including future installed equipment, in accordance with local building codes and regulations. Provide engineering of such support by parties licensed to perform work of this type in the Project jurisdiction. Contractor shall obtain the services of an engineer licensed to perform this work within the state or jurisdiction it is to be performed.
4. The Contractor shall include all costs associated with structural engineering required by code for work in this section.
5. Use skilled mechanics that are capable of returning surfaces to the appearance of new work when modifying millwork.
6. Conduit and common back boxes including four square, pull boxes, junction boxes, etc. are supplied and installed by Division 26 Electrical Contractor.
7. Provide all cable and wire associated with this specification section and related documents.
8. All systems shall be completely installed with all of the necessary interconnection, power supplies, patch cords, snakes, portable equipment cables and wiring to provide a fully functioning system.
9. The governing overall requirement for this project is a complete and functional system.
10. Include work not usually shown or specified, but necessary for proper installation and operation of the system or piece of equipment.

C. Products Supplied But Not Installed Under This Section
1. Loose equipment or products supplied but not installed shall be turned-over to the Owner immediately upon delivery. Contractor is to supply a signed statement of transfer of this equipment to the consultant for record. Client must sign this statement acknowledging receipt of this equipment.
2. Specialty floor boxes, back boxes including but not limited to Crestron, AMX, Extron, FSR, Steel City and speaker back boxes shall be provided to the General Contractor for installation.

D. Products Installed But Not Supplied Under This Section
1. Owner Furnished and existing equipment as shown on drawings.

E. Related Sections
1. Division 9.

2. Division 10.
3. Division 11.
4. Division 26.

F. Allowances
1. Refer to section 2.1.E for related requirements.

G. Measurement Procedures
1. Product quantity is as required. If a quantity is given, the Contractor will provide at least the given amount. Some products listed under this section may not be required to fulfill the obligations of the work.

1.2 REFERENCES

A. Comply with all applicable governing codes.

B. Comply with the following applicable organizations and standards:
1. AES Audio Engineering Society
2. ANSI American National Standards Institute
3. ASTM American Society for Testing and Materials
4. BICSI Building Industry Consulting Service International, Inc.
5. BTSC Broadcast Television Stereo Committee
6. CEDIA Custom Electronic Design and Installation Association
7. EIA Electronic Industries Alliance
   a. RS-310-C: (ANSI C83.9) Racks, Panels, and Associated Equipment
   b. RS-453: Dimensional, Mechanical, and Electrical Characteristics Defining Phone Plugs and Jacks
8. ETL Electrical Testing Laboratories, Inc.
9. FCC Federal Communications Commission
10. ICIA International Communications Industries Association
11. IEC International Electrotechnical Commission
12. IEEE Institute of Electrical and Electronic Engineers
13. INCITS InterNational Committee for Information Technology Standards
14. ISO International Organization for Standardization
15. ITU International Telecommunications Union
16. NAB National Association of Broadcasters
17. NCTA National Cable and Telecommunications Association
18. NEC National Electrical Code
19. NEMA National Electrical Manufacturers Association
20. NFPA National Fire Protection Association
21. NSCA National Systems Contractors Association
22. OSHA Occupational Safety and Health Administration
23. SMPTE Society of Motion Picture and Television Engineers
24. TASO Television Allocation Study Organization
25. TIA Telecommunications Industry Association
26. UBC Uniform Building Code
27. UL Underwriters Laboratories Inc.

1.3 DEFINITIONS

A. Definitions of Terms: The following definitions and conditions apply to each of the respective parameters and the measurements of those parameters, unless specifically stated otherwise:
1. Frequency Response: The minimum acceptable frequency band over which the amplitude response is within 3 dB (or any specified range), or the specified limits of the response relative to the reference frequency (1 kHz for audio, 1.0 MHz for video)

under design load conditions, at any operating level up to and including the specified maximum output while fully in compliance with all other performance specifications.

2. Maximum Output Level: The minimum acceptable maximum signal output level (voltage, current or power) attained under design load conditions attained while fully in compliance with all other performance specifications.
3. Harmonic Distortion: The maximum acceptable harmonic distortion measured at any operating level, up to and including the specified maximum output, with an applied sine wave signal of any frequency in the range of the specified frequency response.
4. Audio Intermodulation Distortion: The maximum acceptable intermodulation distortion resulting from the introduction of 60 Hz and 7 kHz signals in a ratio of 4:1 under design load conditions at any operating level up to and including the specified maximum output level.
5. Signal to Noise Ratio: The minimum acceptable ratio of signal to noise levels derived from broadband measurements under design load at maximum output over the entire range of the specified frequency response.
6. Clipping Level: The minimum acceptable maximum level of signal applied to the device under design load conditions while fully in compliance with all other performance specifications.
7. Sensitivity: The maximum acceptable level of input signal applied to the device that is necessary to provide the maximum output under design load conditions.
8. Design Load: The load (in ohms) specified by usage of the particular device input or output.

B. Signal Levels: The following voltage levels shall be considered the standard operating levels for the particular circuitry, unless specifically noted otherwise (0.775 Volt = O dBu = O dBm for a 600 ohms terminated circuit):

1. Microphone Circuits: -30 dBu or less.
2. Audio Line Level Circuits: -30 dBu to +24 dBu; equivalent to -30 dBm to +24 dBm for a 600 ohms terminated circuit.
3. Loudspeaker Level Circuits: More than +24 dBu.
4. Video Line Level Circuits: 1.0 Volt, peak to peak composite signal.
5. Radio Frequency (RF), Television (MATV) Circuits: +6 to +72 dBmV (0 dBmV = 1,000 microvolts).

C. Characteristic Impedances: The following operating impedances shall be considered to be the standard operating impedances for the particular circuitry, unless specifically noted otherwise:

1. Microphone Circuits: 50-250 ohms source, 150-1500 ohms terminating, electrostatically and electromagnetically balanced to ground.
2. Audio Line Level Circuits: 600 ohms maximum source, 600 ohms minimum. terminating, line to line, electrostatically and electromagnetically balanced to ground.
3. Video Line Level Circuits: 75 ohms maximum source, 75 ohms minimum terminating to shield and signal ground, with Vertical Standing Wave Ratio (VSWR) not to exceed 1.2.
4. Radio Frequency (RF) Television Circuits: 75 ohms nominal to shield and signal ground, with Vertical Standing Wave Ratio (VSWR) not to exceed 1.2.

1.4 SYSTEM DESCRIPTION

A. Design Requirements

1. General
   a. The Pico Library audio-visual system includes a paging system for the library and an audio visual presentation system for the Community room.
   b. A zoned public address system will be provided in library. Distributed 70-volt speakers shall be utilized to provide sound reinforcement. The audio system shall include a DTMF module that will act as an interface between the paging

system and the telephone system. Dialing a pre-defined sequence of numbers into the telephone will allow an all page to occur. Library speaker level control will be done at the power amplifier in IT rack. Pages will be made via the telephone system.

2. Community Room
   a. In-wall stereo speakers will be provided for sound reinforcement of voice and program material. The majority of the energy from the lectern microphone must be routed to the speaker furthest away from the lectern to allow greater gain before feedback. Contractor is to field calibrate the power distribution to the left and right loudspeakers that will allow the greatest gain before feedback from the lectern microphone.
   b. Microphones inputs will be provided at a floor box and facility panel.
   c. A single channel wireless microphone is provided to allow presenter the ability to move about the room.
   d. Input panels both floor and wall mounted will allow connection of laptop computer and portable audio-video equipment to the system.
   e. A lectern with gooseneck microphone and connection panel shall be provided for presentation purposes.
   f. A video projector will be used to project general video media and computer presentation material onto a motorized roll-down front projection screen. The video projector will be wall mounted per the drawings. Suitable seismic restraints shall be provided as required by code. A motorized front projection screen will be mounted recessed into the ceiling.
   g. Source equipment will include a blu-ray player with integrated tuner and broadcast television feed.
   h. An integrated web enabled central control system will be used to control all aspects of the audio and video system's functions. Control system will also control room functions including the motorized shades and lighting.
   i. A dockable wall mounted control touch panel will be used to interface with the main system controller.
   j. An assistive listening system shall be provided to satisfy ADA requirements.

~~1.~~3.
   ~~a. The Pico Library audio-visual system includes a Library and Community Room.~~
   ~~b. A zoned public address system will be provided in library and community room. Distributed 70-volt ceiling speakers will be utilized to provide sound reinforcement. The audio system shall include a DTMF module that will act as an interface between the paging system and the telephone system. Dialing a pre-defined sequence of numbers into the telephone will allow a zone or an all page to occur. Library speaker level control will be done at the power amplifier in IT rack. Pages will be made via the telephone system.~~

~~2. Community Room~~
   ~~a. In-wall speakers and a subwoofer will be provided for sound reinforcement of voice and program material. The majority of the energy from the lectern microphone must be routed to the speaker furthest away from the lectern.~~
   ~~b. Microphones inputs will be provided at a floor box and facility panel.~~
   ~~c. A single channel wireless microphone is provided.~~
   ~~d. An input panel will allow connection of laptop computer and portable audio-video equipment to the system.~~
   ~~e. A lectern with gooseneck microphone and connection panel shall be provided for presentation purposes.~~
   ~~f. An auxiliary AV input panel will be located at the front of the room for connection of portable equipment.~~
   ~~g. A video projector mounted to a scissors type projector lift will be used to project general video media and computer presentation material onto a motorized roll-down front projection screen. The projector lift will allow the projector to remain~~

~~above the ceiling when not in use and lowered automatically when operated. The video projector will be rigidly suspension mounted from the structure above the ceiling. Suitable seismic restraints will be provided as required by code. A motorized front projection screen will be mounted recessed into the ceiling.~~

~~h. Source equipment will include a blu-ray player with integrated tuner and broadcast television feed.~~

~~i. An integrated web enabled central control system will be used to control all aspects of the audio and video system's functions. Control system will also control room functions including the motorized shades and lighting.~~

~~j. A dockable wall mounted control touch panel will be used to interface with the main system controller.~~

~~k. An assistive listening system is provided to satisfy ADA requirements.~~

B. Software Programming

1. General

a. Except when otherwise agreed in writing the client shall retain legal and beneficial ownership of all Intellectual Property, including source code, created by the Contractor, their employees and sub-contractors.

b. The Contractor must allow sufficient time for the programming of all software configurable audio, video and control systems. Contractors must evaluate the systems functional requirements and user interface and then allow time in their bid accordingly. The system description as well as the end user interview will provide the Contractor with the necessary information needed to proceed with the programming. Any questions as to the systems functional requirements must be sent in written RFI form to the Consultant. All programming schemes must be submitted to the Consultant for approval before programming starts. This includes the appearance of all user interfaces, touch panel layouts, preset and sub-preset information (acquired through client interviews), and speaker control schemes. The Contractor will also submit a narrative for the control system concept to the Consultant for approval. The Contractor is to interview the Owner and their representatives to acquire the necessary information needed to allow for the proper programming of this system. The Contractor, after interviewing the Owner, will then submit a written report stating his interpretation of the client's requirements for approval by Consultant. Only after the Client and Consultant have approved the programming report may the Contractor proceed with the programming of this system.

c. All equipment that is connected to the Client's local area network and is configurable via the local area network must have its equipment software installed onto dedicated computers provided by the Client. The Contractor is to allot time to install and test equipment software onto a minimum of two of the Client's computers which are to be identified by the Client and/or Consultant. The computers will be programmed to emulate user interfaces throughout the facility. The Contractor shall coordinate all software deployment over IP with the Client's Information technology department.

2. Control system minimum programming outlined below:

a. The Contractor shall allot 4 hours for on-site control system programming with the Client's representative.

b. The Control System in this project shall connect to the Client's Local Area Network (LAN). This connection will provide desktop computers control of the audio-visual system as well as make available remote troubleshooting via the internet. The Contractor shall provide time to install control system interface software on at least three desktop computers. Coordinate work with Client's Information Services personnel.

c. Provide password protection to each control surface in this facility. Pushbutton panels shall be activated by holding the lower two buttons down for 5 seconds. Deactivation will automatically take place 120 seconds after control panel was last gestured. APADs will be activated by holding two buttons down for 5

seconds. Deactivation will automatically take place when the system is shutdown. Touch panels shall be activated and deactivated by password. Upon start up a password dialog box shall be presented to the user to enter his/her password. Only after entering a password will the user have access to the system. The system shall be programmed to shut down automatically after being idle for a time to be specified by the user. A separate password shall be programmed for all dockable touch panels. This password shall allow the user to undock the touch panel. Coordinate this feature with operations staff.

d. All push button control panels shall be programmed with a technical user mode that allows technical personnel to access a second level of control. A push button volume adjust/source select control interface usually includes various sources that may be played into the zone under control. These sources enter a mixer in the DSP allowing control of both input and output of this mixer. Normal, user level, operation of volume control at a push button station will permit only the output of the mixer to be controlled. This allows a user the ability to control the output of the mixer to raise and lower the volume of all source devices simultaneously. Pressing any of the source select buttons for at least five seconds will place the unit into technical mode and allow technical personnel access to a second level of control functionality. This will permit a technician to balance levels at the inputs of the mixer when required. Holding down a source button for five seconds allows input volume control for sixty seconds. The input source select button will flash during this time period. Pushing another source button for five seconds will immediately release the previously selected button. Selecting a source button for less than five will switch to that source but only the output volume control will be affected by the volume up and down buttons. After sixty seconds of inactivity the panel will automatically default back to user level control.

e. Touch panel layout design will conform to the InfoComm International “Dashboard for Controls” guidelines. Touch panel designs are to be custom to this project. Re-purposed touch panel designs are not acceptable.

f. Technical users shall have the ability to access individual speaker zone controls via the touch panel interface.

g. Control Help File: Each touch panel will include a help file that will explain each layer of the touch-panel control scheme.

h. Control system shall utilize help desk software to provide:
   1) Real-time monitoring of:
      a) Control system.
      b) Device monitoring.
      c) Projector lamp life.
      d) System online status.
      e) Room activity.
   2) Remote system diagnostics via Contractors help desk.
   3) Remote system control.
   4) Event scheduling.
   5) Fault reporting via email alert.
   6) Logging of help request.
   7) User access control via password protection.
   8) Event logging, report and chart generation.

i. The help desk software shall be placed on the desktop computers of each audio-visual maintenance person as well as key personnel of the Client. The Contractor shall train maintenance and operations persons to use this software feature.

j. All serial controlled devices must have bi-directional communication with the control system. All control functions locally available on each device must be accessible via the remote control system. All locally gestured control functions must mirror on the control system user interface. In other words, if a volume

control is adjusted on a DSP interface that adjustment must register on the control interface.

k. Control system shall be used to power up and down connected equipment.

l. All projectors shall be monitored and report lamp hours remaining and lamp failure.

3. Complexity of Programming:

a. It is required that the Contractor be experienced in programming systems of this complexity. Contractors shall allow enough time in their bid to permit extensive programming of all software configurable audio, video and control systems to the requirements of the client and consultant. Contractor shall break out cost associated with programming of these systems for review by the Consultant. By submitting this bid, the Contractor agrees that they understand systems of this type and that all programming services are included to the satisfaction of the Consultant. The Contractor further agrees that they will not make any claim for additional monies because of misinterpretation of programming requirements.

C. System Performance Standards and Requirements (meet or exceed)

1. Audio Systems:

a. Electrical Performance; Source Input to Power Amplifier Output:

1) Frequency Response (Equalizer flat): +/- 0.2 dB 20 Hz to 20 kHz.

2) Total Harmonic Distortion (THD): Less than 0.05%, 20 Hz to 20 kHz, 4 ohms.

3) Noise: At least -105 dB, 20 Hz to 20 kHz, referenced to input of +4 dBm.

4) Crosstalk: At least -60 dB, 20 Hz to 20 kHz.

5) Damping Factor: Greater than 500 (below 1 kHz)

b. Electro/Acoustic Performance; Distributed Systems: 103 dB Consistent with devices specified herein.

1) Equipment: Specified individually.

2) Audio signal paths: Shall not degrade performance of connected equipment.

c. NEC - Article 640: Audio Signal Processing, Amplification and Reproduction Equipment.

2. Video Systems:

a. Video signal system: NTSC to EIA RS-170A, except as noted.

b. Video signal paths: To EIA RS-250C short haul where equalized or fiber optic transmission, otherwise to the performance limit of the specified video cable.

c. ANSI IT7.228 (ANSI Lumens): Measurement method for light output of fixed resolution video projection systems.

d. ANSI IT7.228 (ANSI Contrast Ratio): Measurement method for the contrast ratio of fixed resolution video projection systems.

e. SMPTE 170M: Color Specification for NTSC.

f. SMPTE 125M: Universal Sampling spec for SDTV and HDTV Broadcast Video.

g. SMPTE 253M: RGB Analog Video Interface spec for SDTV Studio applications.

h. SMPTE 274M: Component spec for 1920 x 1080 HDTV.

i. SMPTE 296M: Spec for 1280 x 720 RGB and YPbPr Baseband Video.

3. MATV/CATV RF Systems run in common raceway with Sound and Audio-Visual cabling shall meet the following performance requirements:

a. Radiation: Comply with Title 47, Code of Federal Regulations, Part 76, Cable Television Rules and Regulations.

b. The system shall provide interference-free distribution of any of the scheduled CATV Utility channels and any of the internally generated channels.

c. The TASO Grade of the signal of any channel when viewed on a standard commercial TV receiver at any tap-off outlet shall not be less than the TASO

Grade of the same channel viewed on the same receiver when connected directly to the MATV System feed.

d. The signal level from any channel to any adjacent channel shall not vary more than 3 dB at the tap-off output.

4. Data and Communications Systems:
   a. TIA/EIA 568-C series: Commercial Building Telecommunications Cabling Standard.
   b. ANSI J-STD-607-A: Commercial Building Grounding (Earthing) and Bonding Requirements for Telecommunications.
   c. Comply with ITU-T (International Telecommunications Union – Telecom) for video conferencing systems.
5. Control Systems:
   a. RS485 (TIA-485): Electrical characteristics of generators and receivers for use in balanced digital multipoint systems.
   b. RS232 (TIA-232): Interface between data terminal equipment and data circuit-terminating equipment employing serial binary data interchange.
   c. RS 422 (TIA-422): Electrical characteristics of balanced voltage digital interface circuits.

1.5 SUBMITTALS

A. General
1. In addition to the requirements of Division 1, submit all materials for review arranged in the same order as the Specification, individually referenced to the Specification paragraph and Contract Drawing number. Submit 8 1/2" x 11" items bound in volumes and drawings in edge-bound sets. Submit all drawings on sheets of the same size.
2. The Contractor is to provide two copies of each hardcopy submittal and an electronic format copy (Shop drawings must be submitted as .DWF. All other submittals will be provided as .PDF).
3. Make each specified submittal as a coordinated package complete with all information specified herein. Incomplete or uncoordinated submittals will be returned with no review action.
4. Should the Contractor proceed with the Work of this Section in the absence of submittals for such work submitted and returned with action "No Exception Taken" or "Make Corrections As Noted", the Contractor proceeds at the Contractor's sole risk.
5. In the event that the Contractor deviates from the design shown on the audio-visual Contract Documents when preparing their shop drawings, the Contractor shall indicate with architectural style clouding, those deviations. The Contractor shall also submit with the Shop Drawings, a list of those deviations and substitutions, including the following:
   a. The deviation item number which shall also correspond to a number designation applied to each cloud on the shop drawings.
   b. Section of the specification that applies to these changes.
   c. The applicable shop drawing sheet number for each item.
   d. The corresponding audio-visual Contract Document sheet number for each item.
   e. A clear description of the deviation.
   f. The Contractor’s rational for the deviation (i.e. what benefit the deviation provides, why it is required, any cost impact, etc.).

B. Infrastructure
1. Provide drawings indicating boxes conforming and non-conforming to Consultant’s AV drawings.

C. Product Data

1. Manufacturer's Product Data
   a. Contractor is to submit submittal in electronic format (i.e. PDF)
   b. List of materials (i.e. Table of Contents) categorized by room type: For each item specified in PART 2, include:
      1) Drawing device ID code.
      2) Manufacturer.
      3) Model number.
      4) Listing: UL or other lab.
      5) Quantity.
   c. In sequence of List of Materials, provide a data sheet for each item, including all accessories marked for the proposed product.

D. Shop Drawings
   1. Field (Installation) Drawings: Collate in sequence:
      a. Contractor is to submit shop drawings in .DWF format.
      b. Drawing index/symbol sheet.
      c. Floor plans. At scale of Contract Documents. Show:
         1) Device rough-in boxes with ID number.
         2) Mounting height.
         3) Conduit size.
         4) Wire type.
         5) Wire fill.
      d. Sections/Elevations. At scale of Contract Documents:
         1) Mounting location reference to nearest gridline.
            a) Provide sections for each room containing AV equipment.
            b) Provide elevations for each wall in rooms containing AV equipment.
            c) Show all equipment, including speakers, monitors, projectors, podium, floor boxes, facility boxes, etc.
            d) Provide vertical dimensions referenced above finished floor to each piece of equipment.
            e) Provide horizontal dimensions reference to gridlines.
      e. Enlarged Plans. At scale of Contract Documents or larger as required for trade coordination. Show:
         1) Items indicated in "floor plans" above.
         2) Architectural features.
         3) Rack cabinets.
            a) Ventilation details.
            b) Power distribution detail.
         4) System furniture.
         5) Clearances required by applicable Code.
      f. System Conduit Riser Drawing, Show:
         1) Terminal cabinets.
         2) Coordination with floor plans.
         3) Wire runs not shown on floor plans.
         4) Wire type.
         5) Wire fill.
      g. Mounting details:
         1) Stamped and signed by an Engineer licensed in the Project jurisdiction for work of this type, where required by code.
         2) Show loads, type and strength of connections, sizes, dimensions, materials, etc.
         3) Show calculations on drawings or in bound volume for review by Authorities having jurisdiction.
         4) Provide details for:
            a) Equipment rack anchorage.

b) Loudspeaker mounts.
c) Video projector mounts.
d) Projection screens, both fixed and motorized.
e) Attachment to building structure.

h. Installation details as required:
1) Terminal cabinets: Terminations.
2) Audio-Visual panel details.

i. Wire run sheets. Show:
1) Wire number.
2) Source.
3) Designation.
4) Signal type.
5) Wire type.
6) Operating level or voltage.
7) Timing reference, where applicable.
8) Physical length.

2. Shop (Fabrication) Drawings: Collate in sequence:
a. Contractor is to submit shop drawings in .DWF format.
b. Drawing index/symbol sheet (if separate set from Field Drawings).
c. System functional drawings. Submit separate drawings for each system/subsystem. Show at least:
1) Equipment:
a) Function, make, model.
b) Rack number, module frame and slot number.
2) Field device information
a) Terminal cabinets.
b) Pull boxes.
c) Audio-visual panel connector designations.
3) Wiring
a) Wire number.
b) Wire type.
4) Shield condition at both ends (float, ground, location of ground).
5) Connector wiring details, each type.
6) Audio: Nominal operating level, Polarity. Note deliberate polarity inversions where required to maintain absolute polarity.
7) Video: Physical length. Electrical length in nanoseconds or degrees of sub-carrier, as applies. Equalization required.
8) Twisted pair, transmit and received devices: Transmission range at 60 Hz., cable length and signal quality.
d. Provide drawings for the following systems, if applicable:
1) Audio.
2) Video.
3) Control.
4) Data transmission.
5) Coordinated grounding scheme.
e. Equipment rack elevations: Show:
1) All racks scaled at 1 1/2" equals 1 foot, or larger.
2) Rack: Make, model.
3) Equipment: Function, make, model.
f. Rack wiring drawings: For each rack, show:
1) Power strip: Receptacles, circuiting.
2) Sequencing power and surge suppression systems.
3) Equipment.
4) Grounding.
5) Wiring, all systems.
6) Wiring harness scheme.

7) Ventilation detail.

g. Fabrication details: Submit for:
   1) Receptacles.
   2) Panels.
   3) Special mounting provisions.

h. Legends/engraving details. Half or full size:
   1) Receptacles.
   2) Audio-visual panels.
   3) Equipment designations.

E. Samples
1. Of all finishes/materials that will be visible to the public, including but not limited to:
   a. Receptacles and controls with associated trim plate.
   b. Each type of loudspeaker baffle and/or grille.
   c. All audio-visual panels.
   d. Audio-visual devices in public areas.

F. Programming
1. Control Programming Scheme Submittal
   a. Contractor is to submit submittal in electronic format (i.e. PDF)
   b. Provide a password-protected link to a folder on the Contractor's network to remotely access the touch panel from the Consultant's computer. Contractor is to have a dedicated control processor utilized on their network.
   c. Provide a graphic layout of each user control interface (touch panels, push buttons, etc.).
   d. Provide a list of devices that are controlled by each control user interface, including:
      1) Device.
      2) Brand.
      3) Model Number.
      4) Control Method.
   e. Provide a logic tree for each page for each control interface.
   f. Provide a system routing sheet for each control user interface, including:
      1) Source.
      2) Switcher / device input.
      3) Switcher / device output.
      4) Final destination.
   g. Provide a narrative explaining the function of each control interface.
   h. Provide help file content on each user interface.

G. Shop and Project Site Test Reports
1. Contractor is to submit submittal in electronic format (i.e. PDF)
2. Schedule: Submit test reports in a timely manner relative to the Project schedule such that the representative of the Owner may conduct Verification of Submitted Test Data without delay of progress.
   a. Shop test report: Submit prior to shipping completed equipment racks to Project Site.
   b. Project Site test report: Submit project site test report for this section after system completion and prior to Acceptance Review and Testing.
3. Content: Include at least:
   a. Time and date of start of burn-in.
   b. Time and date of test.
   c. Personnel conducting test.
   d. Test equipment, including serial and date of calibration.
   e. Procedures used.
   f. Results of test - numerical or graphical presentation.

H. Close Out Submittal
1. Contractor is to submit submittals in electronic format (i.e. PDF)
2. Operation and Maintenance Manuals
   a. Index.
   b. Systems operating instructions.
   c. Reduced set of system Record Drawings.
   d. Key schedule.
   e. Maintenance and spare parts schedules.
   f. Shop and Field Test Reports.
   g. Equipment manuals. Collate alphabetically by manufacturer. Provide manufacturer's original operation, instruction and service manuals in color for each equipment item. Provide tabbed dividers between each product. Manuals provided by the Manufacturer in an individual binder may be submitted in that form.
3. Framed Operating and Maintenance Instructions: Provide adjacent to each ensemble of equipment racks. Provide sturdy frame with clear glass or non-scratching plastic cover. Provide permanent, non-fading media. Blueprints shall not be acceptable. Include:
   a. Sequence for system start-up and shutdown.
   b. System Functional Diagrams.
   c. Signal levels and impedance at accessible system signal and test ports, where applicable.
4. Record Drawings
   a. As work progresses, maintain records of "as installed" conditions. Update the set at least weekly. After successful completion of Project Site testing specified herein, and after completion of Punch List corrections, copy all records of "as installed" conditions on to final Record Document drawings, as specified in Division 1.
   b. Content: All drawings required under "Field and Shop Drawings". Show "as installed" condition. Where room designations according to Project permanent signage differ from construction designations in the Contract Documents, show both designations.
5. Provide four copies on CD-ROM containing the “as built” drawings, all manuals, training manual and programming code.
   a. Submit un-compiled programming code.
6. Training Submittal
   a. Provide all training materials for review prior to scheduling training sessions.
      1) Training manual.
      2) Agenda for the training session.
      3) The final punch list, indicating that all equipment is fully functional.
   b. See the section under Owner’s Instructions for training manual requirements.
   c. No training session will be scheduled until final punch list is completed and submitted.
7. Warranty Certificates
   a. Comply with Division 1.

1.6 QUALITY ASSURANCE

A. Qualifications
1. The bidder shall, prior to the bid, in accordance with the Instruction to Bidders, submit at least the following information to verify that the bidder has the necessary experience and qualifications to perform the specified work:
   a. A detailed brochure describing the bidder’s capabilities in terms of facilities, personnel (include a personnel organization chart followed by resumes), experience, background, examples of similar installations (at least two projects

within the past two years), distribution arrangements with manufacturers and financial capability, including certificates of insurance and satisfaction of the project bonding requirements.

b. AIA Document A305 "Contractor's Qualification Statement".

c. Information identifying any and all local agents and/or subcontractors that will assist in the work and their role in the project.

d. Identification of sources of labor for all fabrication and installation throughout the duration of the project.

e. Evidence that he has acquired all necessary licenses, certificates and approvals to perform the specified work within the state or jurisdiction the work is to be performed.

2. Projects that include software configurable, integrated central control systems must include, as a sub-contractor, an authorized independent programmer who is fully engaged in the work of programming. This person shall hold a CAIP - Crestron Authorized Independent Programmer or ACE – AMX Approved Certified Expert.

The Contractor is to enter into an agreement utilizing the authorized independent programmer as a sub-contractor. Under this agreement, the Contractor will retain all of the responsibility for a complete and working system. The Contractor must include in their bid time to work out any programming glitches that may occur in the initial programming stage. These items include working through the initial and final programming stage with the authorized independent programmer to provide a functional system, testing the programmer's graphical user interface for intended functionality and provide on site support for the programmer in the uploading and testing of programming revisions. The control systems programmer shall be present either by phone or in person at the end user interviews to acquire information first hand. The control systems programmer shall submit a report outlining the meeting results to Contractor for approval. Only when the Contractor approves this report shall it be submitted to the consultant for review. If the contractor does not employ a fulltime programmer, the following companies have been approved subject to above.

a. CAIP – Crestron Authorized Independent Programmer.

1) Approved CAIP Programmers

a) Rolling Thunder Software
San Diego P (760) 635-0370
Las Vegas P (702) 564-2968
www.rollingthundersoftware.com

b) TechSpa
Joe Kurta P (407) 888-4466
www.techspa.net

c) Korelogix
Tom Fischer P (480) 235-6861
www.korelogix.com

d) Front Side Solutions
Darryl Lovato P (714) 484-9486
www.frontsidesolutions.com

e) AV Programming Associates, Inc.
Matthew Grisafe P (760) 632-6996
www.avprogramming.com

f) BMA Software Solutions
Marc LaVecchia P (714) 455-2717
www.bmasoftwwaresolutions.com

b. ACE – AMX Certified Expert.

1) Approved ACE programmers:

a) Front Side Solutions
Darryl Lovato P (714) 484-9486
www.frontsidesolutions.com

b) Rolling Thunder Software
San Diego P (760) 635-0370
Las Vegas P (702) 564-2968
www.rollingthundersoftware.com

c) TechSpa
Joe Kurta P (407) 888-4466
www.techspa.net

d) Korelogix
Tom Fischer P (480) 235-6861
www.korelogix.com

3. The Contractor will provide information on how and by whom the requirements of the warranty period will be fulfilled.
4. The submittal must justify, in the judgment of the Consultant, the Architect, and the Owner, that the Contractor has the capability to manage and install a project of this size and scope and that he is capable of the necessary business and technical arrangements for this installation and the pursuant warranty service. Contractor may be disqualified as a bidder if all of the submittal does not meet the approval of the Owner and his/her representative.
5. Company: Work of this Section shall be performed by a Sound or Audio-Visual Systems Contractor who has at least five years direct experience with the devices, equipment and systems of the type and scope specified herein, and who has a fully staffed and equipped maintenance and repair facility, and who is licensed to perform work of this type in the Project jurisdiction. The company must be NSCA R-ESI or CTS certified.
6. Personnel: Use adequate numbers of skilled workers who are thoroughly trained and experienced in the necessary crafts and who are completely familiar with the specified requirements and the methods needed for proper performance of the Work of this Section. Supervisors shall have at least five years direct experience in similar work. Installation and maintenance personnel shall have at least three years direct experience in similar work. Contractors shall have at least 60% of their installation staff CTS or C-EST certified.
7. Designated Supervisor: Provide a designated supervisor present and in responsible charge in the fabrication shop and on the Project Site during all phases of installation and testing of the Work of this Section. This supervisor shall be the same individual throughout the execution of the Work unless illness, loss of personnel, or other circumstances reasonably beyond the control of the Contractor intervene.
8. Staff Engineer: The Contractor shall have on his full-time payroll at least one staff engineer having five years minimum experience as an electronics engineer covering systems and projects comparable in substance and complexity to the project described herein. The staff engineer shall have NICET certification in Electrical/Electronics Engineering Technology and Audio Systems or equivalent. The signature of that engineer shall appear on all shop drawings and submittals.
9. Coordination: Coordinate the Work of this Section with the Work of all other Separate Contracts. Comply with Division 1.

B. Cutting and Patching
1. Cut, patch and extend existing work using skilled mechanics that are capable of matching existing quality of workmanship.
2. Assign work of moving, removal, cutting and patching, to trades qualified to perform the work in a manner to cause least damage to each type of work, and provide means of returning surfaces to appearance of new work.
3. Perform cutting and removal work to remove minimum necessary, and in a manner to avoid damage to adjacent work. Cut finish surfaces such as masonry, tile, plaster or metals, by methods to terminate surfaces in a straight line at a natural point of division.

4. When new work abuts or finishes flush with existing work, make a smooth and workmanlike transition. Patched work shall match existing adjacent work in texture and appearance so that the patch or transition is invisible.
5. Protect existing finishes, equipment, and adjacent work that are scheduled to remain, from damage.
6. Promptly repair damages caused to adjacent facilities by demolition operations, at no change in Contract Amount.

C. Painting
1. Use skilled mechanics that are capable of painting audio-visual equipment and hardware to match architectural surroundings, where applicable.

D. Regulatory Requirements
1. Regulations Applicable: including but not limited to those defined in Division 1.
2. Comply with all applicable federal, state, and local labor regulations, and applicable local union and trade regulations.
3. Installation practices shall be in accordance to industry-accepted standards (ANSI, Cal-OSHA, IEC, IEEE, FCC, NEC, NFPA, ICIA, NSCA, CEDIA, BICSI) or local acts, codes and standards enforced at the place of work, whichever is most stringent.
4. Procure and pay for all necessary permits, licenses, inspections, and observe any requirements stipulated therein.
5. Provide UL/ULC fire rated enclosures around all audio-visual floor and back boxes where required by code.

E. Programming
1. User Group Interview:
   a. Conduct interviews with the end-users to acquire programming requirements. Submit written results of the interview and the requirements set forth by the user group. Associate the user group requirements into the programming of each sub system. Submit to the Consultant a report that outlines the interviews conducted.

F. Pre-installation Meetings
1. Attend a pre-installation meeting at the project site with the Owner and his representatives in order to coordinate related work and scheduling issues.

G. Verification
1. Verify dimensions and conditions at the Project Site. Submit any conflicts in timely manner for resolution.

H. Shop Fabrication and Testing
1. Assemble and fully wire equipment racks at a fabrication shop off the Project Site. Burn-in for not less than 120 hours. Following burn-in, perform specified adjustment procedures. Provide test equipment and test according to procedures specified herein. Submit verification of shop test in timely manner. Following verification of shop test and when installation locations are ready as specified herein, deliver equipment racks and equipment to the Project Site and install.

I. Project Site Installation and Testing
1. Install as specified herein.
   a. Perform specified adjustment procedures. Provide test equipment and test according to procedures specified herein. Request verification of Project Site test in timely manner.

J. Verification of Submitted Test Data

1. Re-test in presence of designated representative(s) of the Owner at reasonable mutual convenience. Provide services of the designated supervisor and an additional technician familiar with work of this Section. Provide all test equipment. Provide complete set of latest stamped submittals of record for reference. Provide complete set of Shop and Project Site Test Reports, as applies. Provide a complete set of manufacturer's original operation, instruction and service manuals for each equipment item for reference.

K. Reference/Project Record Documents
1. At all times when the work is in progress, maintain at the workplace, fabrication shop or Project Site as applies, a complete set of the latest stamped, action submittals of record for reference. Also maintain a separate, clean, undamaged set for preparation of Project Record Documents. Also maintain at the workplace a complete set of manufacturer's original operation, instruction and service manuals for each equipment item for reference.

1.7 DELIVERY, STORAGE AND HANDLING

A. Packing, Shipping, Handling and Unloading
1. The Contractor will take receipt of all Owner Furnished Equipment at the project site or at a local warehouse.
2. Deliver materials in manufacturer's original undamaged packages or in bulk packing which provides equivalent protection from rough handling, dust and dirt.
3. All packing, shipping, insurance, handling and storage costs of equipment and materials shall be the responsibility of the Contractor.
4. The Contractor shall be responsible for insuring all equipment and installation materials stored in their shop facilities until it is delivered to the Project Site and a delivery acknowledgement is received from the Owner or its authorized representative.
5. Equipment unpacked for inspection but not ready for permanent installation must be returned into its protective packing.
6. The Contractor shall be responsible for furnishing a temporary substitute for equipment that could not be delivered in time for system operation. All costs associated for renting, shipping and handling temporary substitute equipment shall be the responsibility of the Contractor.
7. In the event the equipment or installation material delivery is delayed, the Contractor must employ the fastest means of delivery service available to deliver the equipment on time. All costs for expediting the delivery of equipment shall be the responsibility of the Contractor.
8. Store packaged materials off of the ground or slab in a manner to protect them from elements, especially moisture damage.
9. Deliver completed, wired, tested equipment racks to associated equipment rooms at the Project Site when major work of all other separate contracts is complete, equipment room ventilation is operating with clean filters in place, the area is clean and free from airborne contaminates, and continuing work of other trades will not produce airborne contaminates or permit transport of such airborne contaminates to the equipment rooms.

B. Acceptance at Site
1. All equipment and installation material delivered to the Owner shall be properly documented in the form of delivery receipts.
2. Equipment delivered to the Project Site must have a delivery acknowledgement receipt signed by the Owner or its representative. Issue a signed copy of the delivery receipt to the Owner and file the signed copy for future reference.

3. The Contractor shall be responsible for the insurance coverage and security of equipment delivered to the Project Site until it receives an acknowledgement of delivery from the Owner or its authorized representative.

C. Storage and Protection
1. The Contractor shall provide a safe and secure storage location for all equipment and installation materials until they are delivered to the Project Site and it receives an acknowledgement of delivery from the Owner or its authorized representative.
2. For equipment assembled and tested at the Contractor's shop facility and delivered to the Project Site, ensure that the equipment is properly protected from improper handling, rain, water, humidity, moisture, heat, direct exposure to sunlight, dust and dirt during delivery and storage on or off the Project Site.
3. Do not remove protective packing from equipment until they are ready to be installed.
4. If, after equipment is installed, the Project Site cannot be cleaned or is still not clean because of on-going work by others, provide protective covering and protection to prevent airborne dust and dirt originating from damaging equipment.

1.8 PROJECT SITE CONDITIONS

A. Environment Requirements
1. The spaces where audio-visual system assemblies are installed shall meet the following requirements:
a. Free from dust generated from construction.
b. The room temperature shall be within the specified operating temperature recommended by the manufacturer.

B. Existing Conditions
1. Contractor to verify existing site conditions.

1.9 SEQUENCING

A. Submit all testing documentation to the Owner's Representative for review prior to requesting the Fabrication Inspection and Substantial Completion inspections.

B. Allow adequate time for corrections to be made after inspections to maintain the Project Schedule.

1.10 SCHEDULING

A. Comply with the Project schedule.

B. Make all Submittals specified herein in a timely manner. Failure to make timely submittals complete as specified herein is considered to be lack of substantial progress of the Work of this Section.

C. Deliver all equipment, devices and materials required for the Work of this Section and install, test and ready all work for Acceptance Testing at least fourteen days prior to the completion date for the associated area of the Project, unless specifically instructed otherwise by the Owner.

D. Temporary Equipment: Provide and operate, without claim for additional cost or time, temporary equipment and/or systems to provide reasonably equivalent function, as determined by the Owner, in lieu of the Work of this Section which is incomplete or found not in conformance with the Contract Documents as of seven days prior to the completion date. Provide such temporary equipment until Acceptance of the Work of this Section. Thereafter, remove such temporary equipment.

E. It shall be a common understanding that there is a time constraint when executing this work. The Contractor shall use all means and resources to complete this project on or before the specified schedule at no additional cost to the Owner. This includes working beyond normal business hours and days, additional manpower, additional tools, etc.

1.11 WARRANTY SERVICE

A. Warrant all Work of this Section to be free from defects in materials and workmanship for a minimum of 1 year from the date of Owner acceptance of the Work of this Section.

B. All manufacturers' equipment warranties shall be activated in the Owner's name and shall commence on the date of system acceptance. In the case of Contractor modified equipment, the manufacturer's warranty may be voided. In such cases, provide a warranty equivalent to that of the original manufacturer.

C. All high-level software shall follow the warranty conditions specified by the manufacturer. Immediately update or upgrade the Owner's installed software as soon as new versions, updates or patches become available from the manufacturer at no additional cost to the Owner within this warranty period.

D. Response Time: Provide a qualified technician familiar with the work at the Project Site within 12 hours after receipt of a notice of malfunction. Provide the Owner with the telephone number attended 8 hours a day, 5 days a week, and an answering service or equivalent facility attended 24 hours a day, 7 days a week, to be called in the event of a malfunction. Provide repairs at no expense to the Owner and at the Owner's request, alternate facilities, services and systems for the duration of the repairs to any defective work of this Section. Provide a complete and operational System, within 48 hours after notification of a malfunction.

E. All work requested due to warranty issues shall be performed during regular working hours unless the Owner agrees to pay the difference in labor rates for overtime or night time work.

F. The Contractor shall use qualified service personnel to respond to all warranty issues or calls.

G. Off Site Service: Conduct all warranty repairs and services at the Project Site, unless in violation of manufacturer's standard product warranty. Provide substitute systems, equipment, and/or devices acceptable to the Owner for the duration of off-site repairs. Provide transportation for substitute and/or test systems, equipment, devices, materials, parts and personnel to and from the Project Site.

1.12 OWNER'S INSTRUCTIONS

A. General
1. Conduct training on the completed system at a reasonable convenience of the Owner during normal Owner business hours. Contractor is to assess the complexity of the system and will be held responsible to fully train the operation and maintenance staff named by the Owner.
2. Do not start training until all systems have been commissioned, training manuals are approved and an agenda along with schedule of each departmental training session has been submitted.
3. Training will be conducted in the actual room that is the topic of the training session.
4. The client asserts legal and beneficial ownership of all training materials which are specifically commissioned for this project.

B. Operator Training – Do not start training before system is in full operation and all components have been signed off by owner's representative. Use the items covered in the commissioning portion of this specification as a basis for the training curriculum.
   1. At least two 4-hour sessions of instruction will be given in order to familiarize the Owner with the operation of the system. Each training session shall be videotaped. Use a digital conferencing system with dedicated microphone stations for the instructor and each student so that questions and their answers are clearly recorded. A video projector and screen will be used to view the user interface as it is explained. Camera and projector must be synchronized. Audio and video files shall be combined and burned to DVD for distribution to each department. Provide professional DVD with searchable index of topics covered. Provide label with client's logo, room name/number, title, length and topics covered. Provide training on at least all system features as outlined in the Commissioning section plus basic troubleshooting.

C. Maintenance Training
   1. At least two 3-hour sessions of instruction will be given in order to learn how to maintain and troubleshoot the system. A maintenance binder shall be provided by the Contractor with all manufacturer-specific operating and maintenance information for each piece of equipment used. On large jobs, the binders will be sub-divided into individual audio, video and control binders. Provide training on at least the following system features:
      a. Firmware upgrades
      b. Helpdesk features
      c. Complete use of system as outlined in the Commissioning section plus advanced troubleshooting.

D. A training manual specific to this system will be written covering the basic and advanced functional techniques necessary to operate the system in a reliable and fully-functional condition. The Contractor will submit color copies of the training manual and a soft copy in PDF or DOC format. This manual will include:
   1. All contact information, including emergency and after hours phone and pager numbers, for requesting service assistance from the Contractor.
   2. A 11x17 set of as-built drawings of the completed project (a full-sized set will be issued to the client for their use, a half-size set will be attached to the inside back door of the main equipment rack).
   3. A table of contents at the beginning of the manual.
      a. The manual will begin by explaining basic information such as manual references, abbreviations, any assumptions made by the author, prerequisites required, numbering convection, etc.
      b. It will then proceed to the manual objectives.
      c. Explain what the end user should understand after reading the manual.
      d. It will cover the basics of the user interface including start up and shut down procedures, log on procedures, access privileges, operator password, levels of security, file structure, etc.
      e. The manual will proceed to describe each user interface and its function. It will cover every layer of the interface and how to navigate through them.
      f. Each of the system presets will be explained and the physical setup of the equipment and floor plan during presets will be illustrated. Source equipment such as CD players, Cassette, VCR, etc. shall have their routing scheme explained and illustrated. Portable equipment and its connection to the system shall be explained and illustrated.
      g. The manual will end by explaining basic troubleshooting procedures and equipment care instruction.
   4. The Contractor's maintenance instructions, which will include the manufacturer's maintenance instructions found on the factory manuals to keep the manufacturer's warranty in force.

5. A list of consumables (lamps, fuses, batteries, etc.) required to keep the system operating over time, along with sources of supply (if not readily available).
6. The Contractor will compile and submit all factory warranty registration forms or cards for each piece of equipment furnished for this project.
7. A form requesting feedback from the end user as to how the manual should be improved and a section to report errors discovered.
   a. The Contractor will make the corrections and improvement suggestions after receiving feedback from the users. This will be completed at no charge to the client. The manual will contain a date stamp and version number. Each feedback and error correction manual reissue will include a new version number.

E. Initial Use Support
   1. Provide standby trainer/system engineer during the first two public events.

1.13 MAINTENANCE

A. The Contractor shall, within the warranty period, schedule two visits to inspect and perform preventive maintenance on the system. The first visit shall be six months after the commencement of the warranty period. The last visit shall be just prior to the end of the warranty period.

B. Return 90 to 120 days after the system has been turned over to the Owner for additional programming, maintenance and system fine-tuning. Conduct interviews with the user group via telephone to acquire information needed to complete this task. Allow for one full day of programming in your initial bid to complete. Provide a per hour programming fee that will be charged if additional programming is needed.

C. Cache for event logging must be set to record unlimited events until the Contractor's first maintenance site visit. After the Contractor's first maintenance site visit, the cache can be limited to the Owner specified level.

D. The Contractor shall use qualified service personnel to conduct all maintenance work.

E. All maintenance work shall be performed during regular working hours unless the Owner agrees to pay the difference in labor rates for overtime or night time work.

F. Items furnished to the Owner by the Contractor for future maintenance and repair:
   1. Provide one spare lamp for video projectors.

PART 2 - PRODUCTS

2.1 GENERAL

A. Quality of Products
   1. Materials and equipment specified herein have been selected as the basis of acceptable quality and performance and have been coordinated to function as components of the specified systems.
   2. Where a particular material, device, piece of equipment or system is specified directly, the current manufacturer's specification for the same shall be considered to be a part of these specifications, as if completely contained herein in every detail.
   3. Each material, device or piece of equipment provided herein shall comply with all of the manufacturer's published specifications for that item.
   4. Equipment shall be from the manufacturers' current stock and shall not be stored longer than 1 year prior to installation, unless written approval to do otherwise is

provided by the manufacturer and submitted for review by the Owner.

5. All products will be a product of firms regularly engaged in the manufacturing of electrical, electronic or optical equipment. The equipment will be the latest model or type offered which meets the applicable specifications at the time of the submittal. Discontinued items replaced by newer models or versions are prohibited and should not be submitted for review.
6. Quality of workmanship and fabrication of all equipment and components, which are custom fabricated, shall be comparable to professional equipment produced by specialized manufacturers of the trade involved and will be verified by inspection. Only firms having 5 years of experience in all aspects of the fabrication and installation of similar systems will be allowed to perform the work.
7. All materials and products will be new and of professional quality. Unless specifically stated in the drawings or specifications, no existing or used materials will be installed.

B. Quantity
1. Provide the quantity of products as shown on the Contract Drawings, or as otherwise indicated herein.
2. The equipment listed in section 2.2 consists of all major equipment for the project. The Contractor will integrate into the system design and provide any additional components, wiring, programming, etc., to complete a functional system operating as described within the specifications and the category AV drawings.
3. Components or equipment not specified or indicated on the drawings that are required to make a fully functional systems per the Owner's requirements and the design intent, shall be furnished and installed by the Contractor, and shall be submitted for Owner review.

C. Preference
1. Where more than one manufacturer is listed herein as acceptable or equivalent, no preference is intended or implied by the order of listing.

D. In the event that a specified piece of equipment or product has been superceded, discontinued or is no longer available from the manufacturer, the Contractor shall submit a request for substitution of the originally specified product. The substitute product shall be the manufacturer's most current model of the specified product, or if the line has been discontinued, a product by the same manufacturer with specifications meeting or exceeding, and as close as possible to those of the originally specified product. Refer to Alternatives and Substitutes section for clarification.

E. Deferred purchase of equipment, including computers, touch panels, videoconferencing codecs, flat panel displays and video projectors with short market life expectancy
1. Applies to the installation of equipment that is scheduled to take place more than 8 months after the bid has been awarded.
2. Contractor shall, with his bid, breakout pricing for the above mentioned equipment and provide an allowance for these items.
3. Ninety Days prior to its purchase, the Contractor shall submit for the Consultant’s approval, a list of the equipment that has replaced or superseded the specified equipment.
4. The submittal will include the manufacturer’s specification sheets and other documentation to verify that the equipment meets the standards of the original specification.
5. In the event that the Contractor’s allowance for the equipment to be installed exceeds the current pricing, the price differential shall be returned to the Owner as a credit. The credit shall include the current price differential plus markups for overhead and profit and shall be documented in writing.
6. In the event that the current pricing exceeds the allowance, the Contractor shall submit a detailed cost breakdown clearly indicating the current pricing differential and all

markups requested.

F. Provide Complete
1. Provide all auxiliary and incidental materials and equipment necessary for the operation and protection of the Work of this Section as if specified in full herein.

G. Provide New
1. All materials provided under the Work of this Section shall be new, shall be the manufacturer's latest design/model, and shall be permanently labeled with the manufacturer's name, model number and serial number.
2. Products and materials shall be clean, free of defects, damage and corrosion.

H. Similar
1. Similar devices shall be of the same manufacturer, unless specifically noted otherwise in these specifications.

I. Safety Agency Listing
1. All devices provided under the Work of this Section that are connected to the Project electrical system shall be listed by Underwriters Laboratories (UL) or other Nationally Recognized Electrical Testing Laboratory acceptable to the Authorities having jurisdiction at the Project site, and shall be so labeled. Absent such listing, comply with Regulatory Requirements applicable to Unlisted Equipment.

J. Unlisted Equipment
1. Certain equipment specified herein may not bear listing by a Nationally Recognized Testing Laboratory. Such equipment is specified herein only where no equipment is known to exist bearing such listing which that perform the function required by the Owner. In such case, apply for field inspection of such equipment. The Contractor is responsible for the payment of such inspection costs.

K. Power Rating
1. All devices provided under the Work of this Section that are connected to the Project electrical system shall provide stable performance in full accordance with these specifications when operated on main service which complies with ANSI standard tolerances for voltage, frequency, transients and related parameters.

L. Circuit Protection
1. All active devices shall have integral fuse or circuit breaker protection.
2. All circuit breakers shall be fully magnetic.
3. Protection devices shall be located to facilitate examination, resetting and/or replacement without the need to disassemble or demount the associated device.
4. Contractor-fabricated items shall be provided with either indicating type circuit breakers or fuses of the clear glass cartridge type, mounted in fuse holders which will indicate a blown or defective fuse.

M. Continuous Use
1. All active circuitry shall be solid state and shall be rated for continuous use. All circuit components shall be operated in full compliance with the manufacturer's recommendations and shall contain sufficient permanent identification to facilitate replacement.

N. Construction
1. All electronic equipment shall be of the "dead-front" type and shall be designed for standard 19" EIA rack mounting, unless otherwise indicated.
2. Steel frames and enclosures shall be designed and wired to eliminate all induced currents within both the units and the systems.

3. All bolted connections shall be made with self-locking devices.
4. Coordinate all consoles and panels so that the general appearance is similar, or as directed by the Owner.
5. All operating panels shall be at least 1/8" thick aluminum.
6. Provide locking panel covers on all recessed, semi-recessed or surface mounted control panels not located in the equipment rooms, unless specifically noted otherwise. Panel locks shall be flush with no protrusions beyond the panel face when the door is closed. Recessed control panels shall be recessed within the back box to a depth sufficient to permit a locking hinged panel cover to completely close without affecting any device within the enclosed area.

O. Circuit Boards/Modules
1. All printed circuit boards or modules shall be mechanically secured by bolt or friction-loading guide, in addition to any electrical connector attachment, and shall include an integral extraction grip.
2. Printed circuit boards shall be connected to associated circuitry via soldered connections or precious metal positively keyed card edge connectors.
3. All Contractor-fabricated printed circuit boards shall be at least 1/16" thick G-10 glass fabric epoxy base, copper plated to a minimum density of 2.0 oz./sq. ft. on one or both sides, and finished with 60/40 tin/lead solder either hot rolled or plated over the copper. All holes through the boards shall be plated through and solder filled. All boards shall be permanently identified with a designation that matches that of the mating connector or board position in the assembly.

P. Identification
1. Provide permanent intelligible identification on, or adjacent to, all connectors, receptacles, controls, fuses, circuit breakers, patching jacks, and the like. This identification shall clearly and distinctly indicate the function of the item and shall be numbered or lettered to correspond with the function, circuit and location consistent with field and shop drawings. Refer to section 3.5 for clarification.

Q. Modular Products
1. The drawings show conventionally packaged components to convey design intent.
2. Card cages to have front and rear closure panels to provide a finished appearance.
3. Except as noted below, modules of different functional types are permitted to share the same card cage/mounting frame and/or power supplies as applicable and if mechanically and electrically compatible..
4. With amplifier input driven 10 dB beyond input level required to produce full rated output, amplifier shall withstand indefinitely any of the following load conditions without instability of operation of main over current protection (i.e. no blown fuses or circuit breakers).
   a. "Short" circuit of 0.1 ohm.
   b. Open circuit (no load).
   c. Rated load impedance.
5. Maintain sense of signal polarity from input to output.

R. Keys
1. Key all boxes, cabinets, enclosures, panels, controls, doors and related provided for similar usage within a system identically. For each unique key type, provide a quantity of ten. Stamp each key with a reference designation.
2. Submit a schedule of keying to the Owner. Where so noted, provide Project Standard lock cylinders and keys; coordinate with the work of other Sections.

S. Lectern Power Cord
1. The power outlet connecting the lectern to the floor box must be twist-lock type. The power cord connecting the podium to the floor box must be 12 inches shorter that the

low voltage cable connecting it. This will protect the low voltage cable from damage if the podium was to be moved inadvertently without disconnecting the cables. The power cable shall include a wire-rope strain relief to keep the power cord from damage. See cable detail on plan-set for more information.

T. Assistive Listening System (RF)

1. An assistive listening system using wireless radio frequency (RF) transmitter and headsets will allow personal monitoring of the audio program for the hearing impaired. The transmitter will be a frequency agile unit with no less than 30-channel capability and will broadcast the main audio program to personal headsets used by hearing impaired audience members. The system and quantity of headsets supplied shall conform to the ADA requirements (section 219 and 706) for the space. Stereo headset type and hearing aid compatible (T-Coil) listening devices are required; ear-bud type devices are not acceptable. Supply a drop-in type battery charging system capable of servicing multiple receivers, with sufficient charging capacity to charge each receiver simultaneously. Follow the table below for quantity requirements.

Capacity of Seating in Assembly Area	Minimum Number of Required Receivers	Minimum Number of Required Hearing Aid Compatible Receivers
50 or Less	2	2
51 to 200	2, plus 1 per 25 seats over 50 Seats	2
201 to 500	2, plus 1 per 25 seats over 50 Seats	1 per 4 Receivers
501 to 1000	20, plus 1 per 33 seats over 500	1 per 4 Receivers
1001 to 2000	35, plus 1 per 50 seats over 1000 seats	1 per 4 Receivers
2001 and over	55, plus 1 per 100 seats over 2000 seats	1 per 4 Receivers

U. Projection Screens

1. Provide extra screen material drop to locate the projection screen at the optimum viewing angle where required. Verify screen drop requirements with architectural sections and elevations.

~~V. Video Projector Lifts~~

~~1. Lifts are to be capable of dropping to a working position from the control system. A password protected page shall be programmed to allow the lift to drop to a maintenance position for servicing. This feature will time out after maintenance is complete.~~

~~W.~~V. Provide enclosure systems including, but not limited to racks, cabinets, cases and related panels and accessories as specified herein, or approved equivalent. Provide size and quantity as shown on drawings. Provide color as specified by Architect. If no color is shown on drawings, submit manufacturer's standard color chips for selection.

~~X.~~W. Cable Tray: Provide aluminum ladder style cable tray with flange in side rails where called out in drawings. Size the cable tray to accommodate all wire that must pass through it. Provide all supporting hardware and accessories.

1. Ladder Style Cable Tray
   a. P-W Industries.
   b. Equal by Hubbell.
   c. Approved equal.

~~Y.~~X. Floor Mounted Equipment Racks: Provide each bay with basic frame, vented locking rear door, top panel with single 10” fan, certified seismic floor anchor kit, ganging hardware, except where otherwise indicated, at each ensemble of bays, provide end (side) panels to provide

complete enclosure.

1. Rack cabinet, heavy duty welded 14ga. CRS, single bay of maximum dimensions 83-1/8"(H) x 24"(W) x 32.5"(D); floor supported with accessory louvered side rack side panel.
   a. Mid Atlantic WRK Series.
   b. Equal by Atlas/Soundolier.
   c. Approved equal.
2. Turret cabinet:
   a. Mid Atlantic Slim 2 Series.
   b. Equal by Atlas/Soundolier.
   c. Equal by Hammond Manufacturing.
3. Wall cabinet, tilt out:
   a. Atlas/Soundolier AWR Series.
   b. Mid Atlantic WRS Series.
   c. Equal by House of Metal Enclosures (HOME).
   d. Equal by Hammond Manufacturing.
4. Wall Mounted cabinet:
   a. Atlas/Soundolier 300 Series.
   b. Mid Atlantic DWR Series.
   c. Equal by Hammond Manufacturing.
5. Floor mounted pivoting rack:
   a. Mid Atlantic SR-40-22 Swing Rack.
   b. Equal by Atlas/Soundolier.

~~Z.~~Y. Rack Panels and Accessories: Rack Mounting Screws: Screws 10-32; length as required for at least 1/4" excess when fully seated; oval head with black plastic non marring cup washer or equivalent ornamental head; nickel, cadmium or black plated; Phillips, Allen Hex, Square-Tip or Torx drive. Slotted screws are not acceptable.

1. Blank Panels:
   a. Atlas/Soundolier S19 Series.
   b. Zero ZP112000 Series.
   c. House of Metal Enclosures (HOME) Series PM.
   d. Middle Atlantic Products BL, SB or HBL Series.
2. Vent Panels:
   a. Middle Atlantic ETF Series.
   b. Equal by Atlas/Soundolier.
   c. Equal by Zero.
   d. Equal by House of Metal Enclosures (HOME).
3. Shelf:
   a. Middle Atlantic Products U Series.
   b. Atlas/Soundolier SH19 Series.
   c. Zero A52 Series.
4. Drawer:
   a. Atlas/Soundolier SD Series.
   b. Middle Atlantic Products UD Series.
   c. House of Metal Enclosures (HOME) SD Series.
   d. Zero A43/A36 Series.
5. Cassette Holder: Middle Atlantic Products Model RSH-4A.
6. Compact Disc Holder: Middle Atlantic Products Model RSH-4A.
7. VCR Holder: Middle Atlantic Products Model RSH-4A.
8. LP/Laser Disc/Binder Holder: Middle Atlantic Products Model LP.
9. Rackmount Computer Keyboard: Middle Atlantic RM-KB.
10. Equipment Custom Rackmount Shelf: Middle Atlantic Products Model RSH-4A Series.
11. Rackmount Computer Keyboard.
    a. Mid Atlantic RM-KB series.
    b. Approved equal.

12. Computer Monitor Rackmount.
    a. Mid Atlantic RM-MM series.
    b. Approved equal.
13. Horizontal Lacer Bars
    a. Mid Atlantic LBP-IR4, LBP-1S, LBP-1P.
    b. Equal by Atlas/Soundolier.

~~AA.~~Z. Equipment Enclosure Ventilation: Provide UL Recognized devices. Connect to enclosure power, comply with applicable Codes.

1. Fan panel, 5 1/4" high painted steel rack panel with 4" diameter fans, each fan with chrome plated finger guard, low speed air flow, two fans per panel, total 120 CFM:
    a. Mid Atlantic QFP-2 Series.
    b. Atlas/Soundolier ES/IS Series.
    c. BGW Systems.
2. Thermostatic Fan control module, user definable temperature range with status LED's, temperature sensing probe.
    a. Middle Atlantic FC Series.
    b. Atlas/Soundolier CFT Series.

~~BB.~~AA. Equipment Enclosure Power and Signal Grounding: Comply with applicable Codes and applicable portions of Division 26. Provide UL Listed devices, Specification or Hospital Grade. Provide all junction boxes, raceway, fittings, wire, supports and fastenings as required for complete installation. Unless otherwise noted, provide receptacles of NEMA 5-15R configuration.

1. Full height receptacle strip, Isolated Ground:
    a. Wiremold 3000 Plugmold IG Series.
    b. Middle Atlantic PD series vertical power strips.
2. Full height receptacle strip, three or more circuits, Isolated Ground:
    a. Wiremold 3000 Series with Specification Grade IG 5262 Series receptacles.
    b. Middle Atlantic PD series vertical power strip.
3. Wireway, lay in, NEMA 1: Any meeting NEMA 1 and UL870. Size as required.
4. Flexible metal conduit: Comply with Division 26.
5. Sequencing Power System:
    a. The Contractor is to design and build power sequencing and surge suppression systems that will control and distribute power in the equipment racks. The system will be designed to sequentially connect power to all of the audio-visual equipment in the equipment racks. Outlets are mounted to the unit's back plate or on a remote strip. If the project utilizes a control system, the sequencing power system will be controlled by the software configurable control system. The touch panel's shut down button will prompt a second time asking "Are you sure you want to shut the system down?" A positive response will activate system shut down. A push button control station's shut down button will be pressed twice to shut down the system. If the project does not include a control system, the Contractor is to provide a dedicated sequential controller in the equipment racks.
        1) 15 amp or greater power capacity.
        2) 3-prong 15 amp 120VAC isolated ground outlets (provide required amount).
        3) Individual sequencing steps for each outlet.
        4) Adjustable power-up time delay and outlet sequencing intervals.
        5) Modular power raceway systems shall be constructed of 18-gauge min-spangle galvanized steel.
        6) Remote controllable via contact closures (if applicable).
        7) Status indicator on touch panel (if applicable).
    b. Approved subject to above:
        1) Middle Atlantic RLM-XX, RM-XX, R-XX or M-XX Modular Power Raceway

Series.
2) Middle Atlantic USC-6R Universal Sequencing Controller.
3) Equal by Atlas Soundolier.

6. Signal Grounding bus bar, insulated from enclosure frame:
   a. Atlas/Soundolier BBG Series mounted on standoff insulators.
   b. Zero A32 Series.
   c. Middle Atlantic.
   d. Panelboard Isolated Ground bus kit by manufacturer of Project Panelboards specified in Division 26.
7. Multi-Outlet Assembly, Surge Suppressing, UL Listed. Comply with ANSI/IEEE C62.41-1980. Provide at least six receptacles. Provide equivalent to:
   a. Surgex SX RT series.
   b. EFI Electronics Corporation Model 153.
   c. MCG Electronics, Inc. Model 296 (subject to UL Listing).
8. Computer Grade Uninterruptible Power System, UL Listed. Provide continuous, no-break power with sine wave output. Provide Transient Over-Voltage (TOV) Surge Suppression; comply with ANSI/IEEE C62.41-1980, Category A and Category B. Provide complete isolation from Line. Provide output voltage regulation to ANSI C84.1 for computing equipment. Provide output KVA, switch-mode power supply rated, not less than 150% of connected load indicated. Provide one for each Central Processing Unit, Digital Signal Processor and automated control console. Provide equivalent to:
   a. Best Power Technology, Inc. "Micro-Ferrups" Series.
   b. Best Power Technology, Inc. "Axxium" Series.

~~CC.~~BB. Audio Patching and Related:

1. Audio Patching Jack Assemblies; jackfield two times forty-eight (2x48) jacks: Factory pre-wired to insulation displacement connection system, normals brought out to connection system, connection system on backplane of jackfield chassis or a separate unit on cable harness, 2 row by two times forty-eight (2x48) jack array of Bantam Plugs:
   a. ADC Pro Patch Mark IV (Bantam).
   b. Bittree Audio TT (Bantam).
   c. Switchcraft TTP96FA (Bantam).
2. Audio Patching Jack Assemblies; jackfield 48 jacks: Factory pre-wired to insulation displacement connection system, normals brought out to connection system, connection system on backplane of jackfield chassis or a separate unit on cable harness, 2 row by 24 jack array of 1/4" tip-ring-sleeve Longframe pattern jacks:
   a. ADC Pro Patch Mark IV Long Frame.
   b. Bittree Audio Long Frame ¼".
3. Audio Patching Cords: Manufactured to match mechanically, electrically and materials with audio patching jack assemblies specified herein. Flexible shielded cable, length as required. Provide with non-corroding metal. Provide equivalent to:
   a. ADC Pro Patch ¼" Long Frame Patch Cords.
   b. ADC Pro Patch Bantam.
   c. Bittree ¼" Long Frame Patch Cords.
   d. Bittree Audio TT (Bantam) Patch Cords.
   e. Provide Quantity:
      1) Two foot: Eight for each 2x24 Audio Jackfield.
      2) Two foot: Sixteen for each 2x48 Audio Jackfield.
4. Audio Patching Cords, Adapter: Manufactured to match mechanically, electrically and materials with audio patching jack assemblies specified herein. Flexible shielded cable, length six feet. Provide with non-corroding metal 1/4" tip-ring-sleeve longframe pattern plug one end equivalent to Neutrik. Provide opposite end, Circular Audio Connector, Cord, as specified herein. Provide equivalent to:
   a. Patch to Male:
      1) Audio-Line 310 Series.
      2) Pro Co Sound C-PJ/MXB-B-6-P2H.

b. Patch to Female:
   1) Audio-Line 310 Series.
   2) Pro Co Sound C-PJ/FXB-B-6-P2H.
c. Provide Quantity:
   1) Patch to Male: Provide 12.
   2) Patch to Female: Provide 12.

5. Patching Cord Holders: Provide adjacent to each jackfield. Provide quantity as required to store patching cords specified herein:
   a. Audio Accessories Maxi Holder.
   b. Trompeter Electronics Model CH-50.
   c. Pomona Electronics 4408.

~~DD.~~CC. Video Patching and Related:

1. Video Patching Jack Assemblies; jackfield (2x32) isolated jacks: 75 Ohm digital and analog capable, ((2x32) jack array, 3GHz bandwidth, SMPTE 259M and 292M compliant:
   a. Canare (MD-Series)
   b. Bittree (Mini-WECO)
   c. ADC (PV-Series)
2. Video Patching Cords: Manufactured to match mechanically and electrically with video patching jack assemblies specified herein. Flexible shielded cable, length as required. Provide with non-corroding metal. Provide equivalent to:
   a. Canare (Mid-size Video Patch Cord)
   b. Bittree (Mini-WECO Patch Cord)
   c. ADC (ST series Patch Cord)
   d. Provide Quantity:
      1) Two foot: twelve for each 2x32 Video Jackfield.

~~EE.~~DD. Data Patching and Related:

1. Data Patching Jack Assemblies; jackfield two times twenty four (2x24) jacks. Meet or exceed Category 6 requirements described in TIA/EIA-568-C.2-1 as well as the Class E requirements described in ISO/IEC 11801-B.:
   a. Leviton eXtreme 6+ Quickport Patch Panel (or equal).
2. Provide patch cords for patch points as required.

2.2 PRODUCTS

A. Major System Components

DEVICE ID	DESCRIPTION	MANUFACTURER	MODEL	ACCESSORIES
ALA	ASSISTIVE LISTENING ANTENNA	LISTEN	LA-122	
ALR	ASSISTIVE LISTENING RECEIVER	LISTEN TECH	LR-400	
ALT	ASSISTIVE LISTENING TRANSMITTER	LISTEN TECH	LT-800-216	
BP1	BELTPACK	SHURE	ULX1	
CCB	CABLE CUBBY	EXTRON	CABLE CUBBY 200	
DVD	DVD PLAYER	PANASONIC	DMP-BD70V	
ERK1	EQUIPMENT RACK	MIDDLE ATLANTIC	DWR-21-22	
LEC	LECTERN	FORBES AV	8524	LOCKING CASTERS, GOOSENECK LIGHT, DOCUMENT CAMERA TRAY.
M1	MICROPHONE INPUT	FSR	T3-MJ	
MIC1	MICROPHONE	COUNTRYMAN	ISOMAX 4	
MIC2	MICROPHONE	SHURE	WL183	
NWS1	NETWORK SWITCH	CISCO	3560C-8PC-S	
PA1	POWER AMPLIFIER	QSC	CX302	
PA120	POWER AMPLIFIER	TOA	BG-2120	
PJS	PROJECTION SCREEN	DRAPER	SILHOUETTE/SERIES V	TAB TENSIONED, HI-DEF GREY SCREEN MATERIAL
SC1	CEILING SPEAKER	QSC	AD-CI52ST	
SIW1	IN-WALL SPEAKER	TANNOY	iw62 TDC	BACK CAN
SIW2	IN-WALL SPEAKER	TANNOY	iw4 DC	BACK CAN W/ TRANSFORMER
SYSW	SYSTEM SWITCHER	CRESTRON	DMPS-300-C	
TAM	TELEPHONE ACCESS MODULE	BOGEN	TAMB2	
TCR1	TRANSCODER	CRESTRON	DM-TX-200-C-2G	
TCR2	TRANSCODER	CRESTRON	DM-RMC-100-C	
TPC1	TOUCH PANEL CONTROL	CRESTRON	TPMC-8X-GA	DOCKING STATION TPMC-8X-DSW
VPJ1	VIDEO PROJECTOR	NEC	NP-PA500U	NEC NP14ZL LENS, PEERLESS PWA-14 WALL MOUNT, EXT### EXTENTION POLE AND PAG-UNV-MU PROJECTOR MOUNT
WAP	WIRELESS ACCESS POINT	CRESTRON	CEN-WAP-ABG-1G	
WMAA	WIRELESS MIC ANTENNA AMP	SHURE	UA830WB	
WMR	WIRELESS MIC RECEIVER	SHURE	ULXP4	

~~DEVICE ID~~	~~DESCRIPTION~~	~~MANUFACTURER~~	~~MODEL~~	~~MISCELLANEOUS PARTS~~
~~ALR~~	~~ASSISTIVE LISTENING RECEIVER~~	~~LISTEN TECH~~	~~LR-400~~	~~-~~
~~ALT~~	~~ASSISTIVE LISTENING TRANSMITTER~~	~~LISTEN TECH~~	~~LT-800~~	~~-~~
~~BP1~~	~~BELTPACK~~	~~SHURE~~	~~ULX1~~	~~-~~

~~CCB~~	~~CABLE CUBBY~~	~~EXTRON~~	~~CABLE CUBBY 200~~	~~-~~
~~DVD~~	~~DVD PLAYER~~	~~PANASONIC~~	~~DMP-BD70V~~	~~-~~
~~ERK1~~	~~EQUIPMENT RACK~~	~~MIDDLE ATLANTIC~~	~~DWR-21-22~~	~~-~~
~~LEC~~	~~LECTERN~~	~~FORBES AV~~	~~8524~~	~~LOCKING CASTERS, GOOSENECK LIGHT~~
~~M1~~	~~MICROPHONE INPUT~~	~~FSR~~	~~T3-MJ~~	~~-~~
~~MIC1~~	~~MICROPHONE~~	~~COUNTRYMAN~~	~~ISOMAX 4~~	~~-~~
~~MIC2~~	~~MICROPHONE~~	~~SHURE~~	~~WL183~~	~~-~~
~~NWS1~~	~~NETWORK SWITCH~~	~~CISCO~~	~~3560C-8PC-S~~	~~-~~
~~PA1~~	~~POWER AMPLIFIER~~	~~QSC~~	~~CX502~~	~~-~~
~~PA120~~	~~POWER AMPLIFIER~~	~~TOA~~	~~BG-2120~~	~~-~~
~~PA2~~	~~POWER AMPLIFIER~~	~~QSC~~	~~CX302~~	~~-~~
~~PJS~~	~~PROJECTION SCREEN~~	~~DRAPER~~	~~SILHOUETTE/SERIES V-94" DIA. 16:10~~	~~TAB TENSIONED, MATTE WHITE SCREEN MATERIAL~~
~~SC1~~	~~CEILING SPEAKER~~	~~QSC~~	~~AD-CI52ST~~	~~-~~
~~SIW1~~	~~IN-WALL SPEAKER~~	~~BG RADIA PRO~~	~~SA-500~~	~~BACKCAN~~
~~SIW2~~	~~IN-WALL SPEAKER~~	~~TANNOY~~	~~IW4-DC~~	~~BACKCAN W/ TRANSFORMER~~
~~SUB~~	~~SUBWOOFER~~	~~TANNOY~~	~~IW62-TS~~	~~BACKCAN~~
~~SYSW~~	~~SYSTEM SWITCHER~~	~~CRESTRON~~	~~DMPS-300-C~~	~~-~~
~~TAM~~	~~TELEPHONE ACCESS MODULE~~	~~BOGEN~~	~~TAMB2~~	~~-~~
~~TCR1~~	~~TRANSCODER~~	~~CRESTRON~~	~~DM-TX-200-C-2G~~	~~-~~
~~TCR2~~	~~TRANSCODER~~	~~CRESTRON~~	~~DM-RMC-100-C~~	~~-~~
~~TPC1~~	~~TOUCH PANEL CONTROL~~	~~CRESTRON~~	~~TPMC-8X-GA~~	~~DOCKING STATION TPMC-8X-DSW~~
~~VPJ1~~	~~VIDEO PROJECTOR~~	~~PANASONIC~~	~~PT-FW430U~~	~~-~~

~~VPJL~~	~~VIDEO PROJECTOR LIFT~~	~~DRAPER~~	~~SL6~~	~~-~~
~~WAP~~	~~WIRELESS ACCESS POINT~~	~~CRESTRON~~	~~CEN-WAP-ABG-1G~~	~~-~~
~~WMAA~~	~~WIRELESS MIC ANTENNA AMP~~	~~SHURE~~	~~UA830WB~~	~~-~~
~~WMR~~	~~WIRELESS MIC RECEIVER~~	~~SHURE~~	~~ULXP4~~	~~-~~

B. The above list of Major System Components only outlines the major items necessary to allow the system to function as designed. It lists no power supplies, balancing transformers, power splitters, modular cards or other auxiliary components required to achieve a functioning system. Contractor is required to supply all components needed to provide a complete and operable system as outlined in the contract documents. The full set of construction documents are to be used when preparing a bid. This list is not intended to provide a full bill of materials.

2.3 FINISHES

A. Any item or component of the Work of this Section which is visible shall comply with the following. Finishes noted or scheduled on the Contract Drawings shall take precedence. Submit all color samples of all items visible to public for approval.
   1. Where finishes are not noted or otherwise defined in the Contract Documents, submit manufacturer's standard finish samples for selection by the Owner.
   2. Paint loudspeaker cabinets to match exactly the surrounding and adjacent surfaces. Submit paint sample to Owner’s representative for approval.
   3. Unless otherwise noted, receptacle or device plates subject to connection or operating force shall be stainless steel or hard anodized aluminum. Provide plates which generally match the appearance of project standard receptacle or device plates in view in the same area. For anodized aluminum, submit samples of standard colors for selection by Owner.
   4. Operating panels shall be steel, primed, painted with thermosetting epoxy paint, with legends silk-screened in contrasting color, and coated with clear epoxy thermosetting coating; or aluminum, hard anodized, with legends engraved and filled with contrasting color, all coated with clear epoxy thermosetting coating.
   5. All steel surfaces shall be treated with primer equivalent to zinc phosphate and finish painted with baked enamel or painted with a thermo setting epoxy paint.
   6. All aluminum surfaces, except those used as operating surfaces, shall be anodized and then painted with a thermo setting epoxy paint.

B. Custom Fabricated Plate Screws
   1. Match the finish of the screws used to mount the custom fabricated plates with the finish of the custom fabricated plate.

C. Ceiling Loudspeaker Grilles
   1. Paint loudspeaker grilles to match exactly the surrounding and adjacent surfaces (when speakers are recessed). Apply paint to permit servicing of loudspeakers without damage to finish of adjacent or adjoining surfaces. Provide uniform appearance. Do not obstruct grille openings with paint. Submit paint sample to Owner’s representative for approval.

D. Manufacturer’s logos
   1. Remove all manufacturers’ names, logos, or other symbols from speakers or other objects placed in view of the public.

2.4 ALTERNATIVES AND SUBSTITUTES

A. Substitutions of equal equipment beyond the alternatives listed will be permitted only in accordance with Division 1. If a requested substitution requires a change in any of the contract drawings, a revised drawing must be submitted as part of the substitution request. The Owner's Representative will be the final judge of the acceptability of substitutions. The burden of proof of equivalence is the responsibility of the Contractor.

B. Acceptance of a product shall not, in any form or manner, relax the system performance requirements of this Specification and the performance characteristics of the product.

C. The Contractor shall submit for review a complete list of proposed substitutions for approved equipment listed in Part 2.

D. For all substitutions, the Contractor shall provide the manufacturer's independent test data to demonstrate that the proposed alternatives to the approved equipment comply with the specifications. Specifications shall contain at least all information available for the specified product.

E. The Contractor shall submit a description and drawings showing all changes to the Contract Documents that the proposed substitution will require for proper functionality and operation.

F. Proposed substitutions shall not affect dimensions shown on the Contract Document except as submitted for review and approved by the Owner.

G. Any redesign or construction costs required to integrate the proposed substitution shall be the responsibility of the Contractor. Any costs incurred by the Owner, Owner's representatives, Architect, Engineers or Consultants attributable to the integration of a proposed substitution shall be borne by the Contractor.

H. Any proposed substitution shall have no adverse affect on other trades, the construction schedule or specified warranty requirements.

I. The functionality, performance, general appearance and quality of the proposed substitution are equivalent to or superior to those of the specified item.

J. Any change to the Contract (deductive or additive cost) associated with a proposed substitution shall be submitted to the Owner for review at the time the substitution is proposed and accompanying a substitution request documentation.

K. The Contractor will provide the same warranty for the substitution that the Contractor would for the specified product.

L. The Contractor will coordinate the installation of the accepted substitute, making such changes as may be required for the Work to be complete in all respects equal to the designed system before the substitution was made. In the event that the substituted material or equipment fails to meet performance testing standards after installed, the Contractor will replace substituted material or equipment with those initially specified.

PART 3 - EXECUTION

3.1 GENERAL

A. Perform the Work of this Section in accordance with acknowledged industry and professional standards and practices, and the procedures specified herein.

B. Furnish and install (herein, "provide") all materials, devices, components, and equipment required for complete, operational systems.

C. Contractor is to supervise the installation of back boxes and terminal cabinets installed by the Division 26 Contractor. Contractor is to verify that correct boxes are installed in their proper locations before any drywall has been installed.

3.2 EXAMINATION

A. Immediately report to the Consultant any discrepancies between the specifications and drawings. This includes discrepancies between the technical specification documents and actual field dimensions or findings that may hinder installation work, conflict with other trades, or cause delays.

B. Carefully examine all details that affect all aspects of the systems described in the specifications and drawings.
   1. Examine, coordinate and confirm all drawings and details.
   2. Examine, coordinate and confirm all electrical power requirements, conduits, raceways, boxes, and etc.
   3. Examine, coordinate and confirm work of other trades that may influence the outcome of the design, specification, and performance of the systems.

3.3 PREPARATION

A. This installation section is only meant as a guideline for the Contractor. The Contractor shall be responsible for executing all installation work in a manner that is in accordance to industry-accepted standards or governing codes, whichever is more stringent. Installation activities shall be executed in an organized and orderly manner. These steps include, but are not limited to, pre-delivery testing, delivery, unloading, installation, equipment / cable labeling, programming, set-up / calibration / alignment / adjustment, testing, commissioning, training, and documentation.

B. Protect all existing work surfaces, furniture, equipment, fixtures and etc. before commencing installation work. Any damage to the existing physical and electrical property due to installation work shall be the responsibility of the Contractor.

C. Immediately hand over any de-installed equipment to the Owner for disposal or safe-keeping.

D. Carefully remove any obstructions such as fixed seating, ceiling tiles, furniture, equipment and etc. that would obstruct or hinder the installation work. Damage caused by undue care in moving these items shall be responsibility of the Contractor.

E. Examine, coordinate, and confirm the cleanliness of the work site before commencing the portion the installation work that involves dust-sensitive electronic or electrical equipment such as audio mixers, switchers, projectors, control processors, computers, cameras, etc. Dust-sensitive equipment that is installed in a work site with a lot of air borne dust and dirt shall be properly protected. For example, a video camera on a wall-mounted bracket is protected by a clean plastic bag to prevent dust from contaminating it. Seal the bag's opening using adhesive tape.

F. Prior to commencing installation work, ensure that the surrounding areas are clean and promote ease of installation work.

G. Ensure that all equipment rack and equipment locations are clean before commencing installation work.

H. Unless specified otherwise, furnished products / equipment shall be tested, delivered and installed. And, all systems shall be tested and commissioned to fully operational and properly configured condition.

I. All electrical equipment shall be burned-in or tested at the Contractor's shop before delivery. This pre-installation test shall reveal any equipment that is faulty, malfunctioning or dead out of the box ahead of time.

J. All radio frequency (RF) operated devices shall be tested on-site prior to installation to determine blind spots, RF interference, or any other transmission / reception problems. The Contractor shall be responsible for costs associated with providing additional support or accessory equipment (antennas, amplifiers, cables, etc.) and / or services to improve signal transmission / reception.

K. Provide all support equipment (ladders, man-lifts, tools, etc.) required to complete the installation work in a safe and expeditious manner.

L. Obtain any plan approvals, permits and licenses required by inspection authorities prior to execution of any installation work. The Contractor shall be responsible for all associated fees and costs incurred while fulfilling this requirement.

M. Ensure that all equipment is accessible for operation and maintenance work. Under no circumstance shall equipment be inaccessible or inconveniently located.

N. Aside from the systems' operational features, provide equal attention to the overall aesthetics of the installed equipment and cabling. Special attention to aesthetics shall be extended to equipment or cabling in public spaces.

O. Firmly secure all fixed equipment and hardware in place and ensure that they are plumb and / or square. An exception to this shall be portable or movable equipment.

P. Structurally mounted equipment: All equipment shall be mounted in accordance to all applicable safety codes, standards and practices. The one that provides for the most stringent rule shall prevail. All mounting hardware shall have a load rating by, at least, a factor of 5 (500% or greater) in reference to the weight of the equipment to be mounted or suspended. An exception to the rule shall be existing local safety codes or standards requiring greater load capacities.

Q. Seismic restraints: Abide by all the seismic restraint requirements described in all applicable building codes in force at the work site. If no provisions exist for a particular situation, follow these minimal recommendations.
   1. Fixed equipment: Mount and brace to the building structure to minimize potential hazards to personnel and damage to property during any kind of seismic event.
   2. Floor mounted equipment: Bolt equipment securely to the floor to prevent from toppling during any kind of seismic event
   3. Vertical-mounted columns: Apply braces to the vertical column in four opposing directions back to the mounting surface. This will minimize sway in any direction. Provide a separate, flexible restraint (e.g. aluminum braided aircraft cable) with a capacity of 5 times the weight of the total mounting system. The same applies to the anchor to which the flexible restraint is attached and the method of attachment to the structure.
   4. No equipment, equipment supports, or mounts must fail before the structure fails.
   5. Seismic restraint measure must not interfere with fire stopping.
   6. Notwithstanding compliance with these minimum recommendations, it is the Contractor's responsibility to ensure that the seismic restraint measures taken are

adequate for the circumstances, including, if required, verification by an independent structural engineer. The cost of all such engineering shall be the responsibility of the Contractor.

7. Penetration of the Slab: Verify that any mounting or restraint work that requires deep or thorough penetration of the slab shall not damage embedded materials including, but not limited to, slab tensioning devices or conduit. Verify the slab by X-ray or other method before proceeding. The Contractor shall be responsible for all costs associated with this investigation.

3.4 INSTALLATION

A. Follow manufacturer's instructions for installing, operating, configuring, and programming their equipment. Do not perform modifications to equipment that would void its warranty.

B. Pull and terminate all cables, and interconnect all equipment and components in accordance with approved drawings. Install audio-visual cover plates and faceplates onto all boxes.

C. Loudspeaker Assembly Installation

1. Loudspeakers:
   a. Verify proper installation of loudspeaker enclosures and related support.
   b. Verify that no loudspeaker assembly is subjected to stresses or loading effects in any way contributing to possible extraordinary failure.
   c. Connect loudspeaker assemblies to the appropriate 70 volt-line transformer tap as applies. Verify specified polarity. Use insulated crimp connectors or insulated "bobtail" splices applied with manufacturer's recommended ratchet tooling. Wago Wall-Nuts 773 Series or equal are acceptable. Wire nuts or "Scotchlock" connectors shall not be acceptable.
   d. Verify that loudspeaker grille openings and loudspeaker components are clear of paint after finishing.
   e. Perform preliminary loudspeaker tests specified herein. Correct non-conforming conditions.
   f. Adjust 70 volt-line transformer taps as required to realize uniform sound pressure level as specified herein. Document final 70 volt-line transformer taps on the Record Drawings.
   g. Correct all conditions giving rise to noise, rattle or other extraneous sounds owing to operation of a loudspeaker assembly under any specified operating condition.
2. Packaged Loudspeakers:
   a. Design, engineer and provide complete, all means of support, suspension, attachment, fastening, bracing, and restraint (hereinafter "support") of packaged loudspeakers. Provide engineering of such support by parties licensed to perform work of this type in the Project jurisdiction. Submit in timely manner.
      1) Comply with applicable Code and the requirements of the Authorities having jurisdiction.
      2) Provide safety factor greater than six or as required by Code, whichever is greater.
   b. Mounting shall:
      1) Permit each packaged loudspeaker to be re-oriented at least plus or minus 5° from angles shown on the Contract Drawings for optimum coverage.
      2) Maintain precise location and orientation of each packaged loudspeaker component after such adjustment when subject to vibration of loudspeaker components due to operation at full specified system output level, and when subject to normal building motion and Code defined seismic induced building motion.
      3) Use rigid metal support members, such as threaded rod with locking nuts.

c. Test each packaged loudspeaker prior to installation at design locations. Test at least polarity and freedom from buzzes, rattles and objectionable distortion, using procedures specified herein. Correct non-conforming conditions.
d. Do not apply any load to building structure without first obtaining written approval of the Owner. Obtain per Project procedures.
e. During Acceptance Testing, adjust orientation of packaged loudspeakers as directed to achieve optimum coverage. Provide workers and ladders as required. Perform such adjustment with no claim for additional cost or time.
f. Do not suspend or orient the loudspeaker cluster prior to verification by the Owner or Owner's representative, that the intended location is correct with respect to as-built conditions such as the final dimensions of the space.

D. Video Projectors
1. Projectors shall be centered laterally to the projection screens.
2. Projectors shall be mounted such that digital keystone compensation shall not be required.
3. Selected projectors shall have lamp replacement and filter cleaning doors located in such a way that these items may be serviced while the projector is installed.
4. Projectors shall be mounted such that their optical zoom settings shall not be set at either their widest nor narrowest extreme, but shall be used in their mid-range.

3.5 LABELING AND IDENTIFICATION

A. All cables and connecting blocks shall be clearly, logically and permanently marked and identified by the following means:
1. Use cable labels similar to the Panduit Polyolefin Self-laminating Labels for inkjet or laserjet printers or any other means acceptable to the Consultant. Cable labels should be machine printed and not handwritten.
2. Cable labels should be placed approximately 12 cm. from each end of the cable.
3. Labeling conventions shall be clear, logical, and must be acceptable to the Consultant.
4. Include all cable identification numbers on all wiring diagrams and cable schedules.
5. For fiber optic cables, use cable identification products such as the Panduit Labelcore series or any other means acceptable to the Consultant.
6. For connector and terminal blocks, label using any means acceptable to the Consultant.

B. All cover plate, switches, panels, outlets, etc. labeling shall be engraved and filled, or silk-screened or by any other means acceptable to the Consultant. Do not use Dymo, Brother, or other similar labeling products.

C. Protective Devices
1. Identification of fuses and circuit breakers shall indicate protected circuitry, rating of protective device and voltage across open circuited protected device.

D. Panels and Receptacles
1. Panel surfaces shall be engraved and filled or silk screened with identification, or shall be provided with 1/16 inch (minimum) thick laminated plastic labels with engraved block characters at least 1/8 inch high fastened to the equipment by stainless steel screws or rivets. Provide white characters on black background unless otherwise noted. Embossed plastic (Dymo) labels shall not be acceptable.

E. All equipment shall be labeled in a clear, logical manner or by any other means acceptable to the Consultant.
1. For Control Knobs and Sliders: Use 6mm (1/4") round labels, such as the Avery 057xx series, to indicate level settings. Neatly draw an arrow on the label using a fine tip permanent marker to accurately indicate the position of the control knob. If a control

knob or slider has multiple level settings, use a logical and consistent color scheme to identify each setting. Illustrate all equipment settings in the Operation Manual.

2. For equipment identification, use 'badges' made of aluminum or plastic or any other acceptable material with engraved and filled, or silk-screened labeling. Stick these badges using industrial-strength doubled-sided 3M adhesive tape. Note: Labels made using Brother-type label maker or similar machines can be used as long as industrial-strength double-sided tape is used to hold the label in place. Label schemes should be clear, logical, and simple or by any other means acceptable to the Consultant. Indicate equipment labeling schemes on all elevation and plan drawings showing the front and / or rear of the equipment racks. The reader should be able to easily reference the label description to specific equipment in the Operation and / or Maintenance Manuals.

3.6 WIRING

A. General
1. This section does not apply if the drawings incorporate a wire schedule.

B. Audio Signal Wiring Classification:
1. Type A-l: Microphone level wiring less than -30 dBu, 20 Hz to 20 kHz.
2. Type A-2: Line level wiring -30 dBu to +24 dBu, 20 Hz to 20 kHz.
3. Type A-3: Loudspeaker level or circuit wiring greater than +24 dBu, from 20 Hz to 20 kHz.

C. Video/Graphics and Related Signal Wiring Classification:
1. Type V-1: Baseband and composite video wiring 1 volt peak-to-peak into 75 ohms, 0 to 100.0 MHz.
2. Type V-2: Synchronization and switching pulse wiring 4 volts peak-to-peak into 75 ohms, 15.62 to 15.75 kHz.
3. Type V-3: Color subcarrier wiring 0 to 4 volts peak-to-peak into 75 ohms, 3.57 to 4.43 MHz.

D. Control Signal Wiring Classifications:
1. Type C-1: DC control wiring 0 to 50 volts.
2. Type C-2: Synchronous control or data wiring 0 to 40 volts, peak-to-peak.
3. Type C-3: AC control wiring 0 to 48 volts, 60 Hz.

E. Additional Wiring Classifications:
1. Type M-1: DC power wiring 0 to 48 volts.
2. Type M-2: AC power wiring greater than 50 volts, 60 Hz.

F. Wiring Combinations: Except as indicated herein, conduit, wire ways and cable bundles shall contain only wiring of a single classification. The following combinations are acceptable in conduit, or cable harnesses. Additional acceptable combinations may be indicated on the Contract Drawings.
1. Types A-1, C-1, and M-1.
2. Types A-2, C-l, C-2, and M-l, runs less than 20 feet.
3. Types A-2, C-1, and M-1.
4. Types A-3, C-1, C-2, and M-1.
5. Types A-2, V-1, and V-3.
6. Types V-1, V-2, V-3, and C-1.
7. Types M-2 and C-3.

3.7 WIRE AND CABLE INSTALLATION

A. Provide permanent identification of run destination at all raceway terminations.

B. All wire and cable shall be continuous and splice-free for the entire length of run between designated connections or terminations.

C. All shielded cables shall be insulated. Do not permit shields to contact conduit, raceway, boxes, panels, connector shell or equipment enclosures.

D. Within buildings, make splices only in designated terminal cabinets and/or on designated equipment backboards. Outside buildings, make splices only in designated manholes and/or hand holes. Protect splices outside of buildings with splicing kits equivalent to Scotch-cast Re-enterable. Make splices only with connectors or terminal devices specified herein. Document all splices on Record Drawings.

E. Verify that all raceway has been de-burred and properly joined, coupled, and terminated prior to installation of cables. Verify that all raceway is clear of foreign matter and substances prior to installation of wire or cable.

F. Inspect all conduit bends to verify proper radius. Comply with Code for minimum permissible radius and maximum permissible deformation.

G. Apply a chemically inert lubricant to all wire and cable prior to pulling in conduit. Do not subject wire and cable to tension greater than that recommended by the manufacturer. Use multi-spool rollers where cable is pulled in place around bends. Do not pull reverse bends.

H. Provide a box loop for all wire and cable routed through junction boxes or distribution panels. Provide tool formed thermal expansion loops at cable at manholes, handholes and at both sides of all fixed mounted equipment. Cable loops and bends shall not be bent at a radius greater than that recommended by the manufacturer.

I. Secure all wire and cable run vertically for continuous distances greater than 30 feet. Secure robust non-coaxial cables with screw-flange nylon cable ties or similar approved devices appropriate to weight of cable. For all other cables, provide symmetrical conforming nonmetallic bushings or woven cable grips appropriate to weight of cable.

J. All Category type cable, connectors and plugs shall be color coded for easy visual distinction. Color coded insert type boots shall be installed on all Category type plugs. A colored coded ring will be provided on all chassis connectors (i.e. Neutrik ACRF-#). Cable connecters shall be equipped with Neutrik BSE-# color coded bushings. The Color code shall be as follows:

1.	Digital Video / AV UTP	=Green
2.	LAN	=Yellow
3.	AV Local Area Network	=Orange
4.	Quick Media	=Blue
5.	AV UTP	=White

3.8 CONNECTOR AND SIGNAL POLARITY CONVENTION

A. Maintain consistent absolute signal polarity at all connectors, patch points and connection points accessible in the system. Where applicable, a positive polarity electrical signal shall yield positive acoustic pressure from the loudspeakers.

B. Audio signal connector convention: AES14-1992 (ANSI S4.48-1992) AES standard for professional audio equipment - Application of connectors, Part 1, XLR-type polarity and gender.

Signal	Connector	Wire

Signal Phase	Pin 2	Red or White
Signal Anti-Phase	Pin 3	Black
Signal Ground	Pin 1	Drain Wire

C. Video and RF/MATV Connector Convention:

Signal	Connector	Wire
Signal Phase	Center Pin	Center conductor
Signal Anti-Phase	Shell	Shield
Signal Ground	Shell	Shield

D. Voice/Data Connector Convention: Comply with EIA/TIA-568C.

3.9 WIRING PRACTICE

A. Land all non-coaxial field wiring entering each equipment rack at specified terminal devices prior to connection to any equipment or devices within racks. At Contractor's option, such terminals may be located in the equipment racks or at backboards provided. Coordinate such selection with Project construction sequence and test procedures specified herein.

B. Identify all wire and cable clearly with permanent labels wrapped about the full circumference within one inch of each connection. Indicate the number designated on the associated field or shop drawing or run sheet, as applies. Assign wire or cable designations consistently throughout a given system. Each wire or cable shall carry the same labeled designation over its entire run, regardless of intermediate terminations. Provide any of the following:
1. Continuous permanent imprint; equivalent to Clifford of Vermont, Inc. "Quik-Pull".
2. Direct hot stamp.
3. Heat shrinkable factory hot stamped; equivalent to Brady sleeve Heat shrink.
4. Adhesive strip printed labels wrapped the full circumference of the wire and sealed with clear heat shrink tubing; equivalent to Thomas and Betts or Panduit Insta-code with clear heat-shrunk tubing equivalent to Alpha.

C. Apply all crimp connectors only with manufacturer's recommended ratchet type tooling and correct crimp dies for connector and wire size. Plier type crimp tooling shall not be acceptable.

D. Coordinate insulation displacement (quick connect) terminal devices with wire size and type. Comply with manufacturer's recommendations. Make connections with automatic impact type tooling set to recommended force.

E. Make all connections to screw-type barrier blocks with insulated crimp-type spade lugs. Lugs are not required at captive compression terminal type blocks. Provide permanent designation strips designed for use with the terminal blocks provided. Make neat, intelligible markings with indelible markers equivalent to "Sharpie".

F. Tin terminated shield drain wires and insulate with heat shrinkable tubing.

G. Use only rosin core 60/40 tin/lead solder for all solder connections.

H. Dress, lace or harness all wire and cable to prevent mechanical stress on electrical connections. No wire or cable shall be supported by a connection point. Provide service loops where harnesses of different classes cross, or where hinged panels are to be interconnected.

I. Termination and build out resistors and related circuit correction components shall be visible. Do not install in connector shells or internally modify equipment. Show locations on Record Drawings.

J. Correct any and all of the following unacceptable wiring conditions:
1. Deformed, brittle or cracked insulation.
2. Insulation shrunken or stripped further than 1/8-inch away from the actual point of connection within a connector, or on a punch block.
3. Cold solder joints.
4. Flux joints.
5. Solder splatter.
6. Non-grommet, non-bushed, or non-insulated wire or cable entries.
7. Deformation or improper radius of wire or cable

3.10 SIGNAL GROUNDING PROCEDURES

A. Comply with National Electrical Code.

B. Unless otherwise noted maintain a unipoint ground scheme.

C. Signal and electrical system grounds shall be isolated except at the Project ground field connection.

D. Equipment enclosures shall not be permitted to touch each other unless bolted together and electrically bonded.

E. Ground and bond equipment racks and similar equipment enclosures containing powered equipment exclusively via the Isolated Ground conductors provided under Division 26. INSULATE RACK MOUNTING, ANCHORAGE, AND RACEWAY CONNECTIONS.

F. At each rack, provide an Isolated Ground bus within the rack. At each rack, provide a lug bonded to the rack frame with a #8 TW stranded wire to the rack Isolated Ground bus.

G. At each ensemble of racks, provide a single labeled Isolated Ground tubular-clamp bus bar terminal strip to land the individual rack Isolated Ground bus ground conductors. Connect the main Isolated Ground conductor from the Technical Power panel board at this point.

H. Equipment signal ground shall be to the Isolated Ground System via the green wire of the equipment power cord. Where equipment uses two wire power cord, provide #12 green bond wire to rack IG bus bar. At equipment, provide crimp lug and suitable hardware for bonding.

I. Shielded cables of this section shall be grounded exclusively to Isolated Ground by a single path. Shield shall be tied to Isolated Ground at one end only, i.e., at the low potential (receiving) end of run, unless otherwise noted.

J. Unless otherwise noted, at audio jackfields, tie source shield at jackbay frame. Float shields at connections to output jacks. Bus each row of jack frames and run individual #12 green ground wire for each row to rack IG bus bar.

K. Signal Ground provisions shall realize less than 0.15 ohms to the primary ground connection.

3.11 EQUIPMENT ENCLOSURE (RACK) AND EQUIPMENT BACKBOARD FABRICATION

A. Combustible material, other than incidental trim of indicated equipment, is prohibited within equipment racks.

B. Within each equipment enclosure, provide a full-height multi-circuit ISOLATED GROUND outlet strip with branch circuit count as shown on drawings; locate on the left side of the equipment enclosure, as viewed from the rear. In each enclosure provide number of receptacles required by present and future equipment indicated on drawings, plus at least two spare receptacles. Provide flexible steel raceway and junction box for connection of power service. Bond internal raceway to rack frame.

C. Provide a permanent label on the front of each equipment rack including the rack designation, and the circuit breaker number and associated electrical distribution panel designation servicing same.

D. Maintain separation of wiring classifications as specified herein. Separately dress, route and land microphone and line level cables and related on the right side of the equipment enclosure, as viewed from the rear; dress, route, and land loudspeaker level and control cables on the left side of the equipment enclosure, as viewed from the rear.

E. Access shall not require demounting or de-energizing of equipment. Install access covers, hinged panels, or pull-out drawers to insure complete access to terminals and interior components.

F. Fasten removable covers containing any wired component with a continuous hinge along one side, with associated wiring secured and dressed to provide an adequate service loop. Provide an appropriate stop locks to hold all hinged panels and drawers in a serviceable position.

G. Provide permanent labels for all equipment and devices. Where possible, fasten such labels to the rack frame or to blank or vent panels which will remain in place when active equipment is removed for possible service.

H. At jackfields, provide service loop to permit removal of jackfields from rack sufficient to conveniently access all jack contacts for routine cleaning and maintenance. Organize the service loop and harness such that reasonable reconnection of jacks and jack normals is possible without cutting apart the harness.

I. Coordinate the design and execution of wire harnessing of multi-bay rack ensembles with conditions of delivery to installation locations at Project Site, and with the requirement herein for test of the completely wired system in the shop prior to delivery to the Project Site. Organize the wiring harnesses such that they will fold within one shippable unit without risk of damage, or provide polarized multipin connectors and related interconnect systems as specified elsewhere herein.

J. At each equipment backboard, provide UL Listed surge suppressing multi-outlet assembly with at least six receptacles.

3.12 ADJUSTING AND TESTING

A. Test Equipment

1. Furnish, store and maintain test equipment at the fabrication shop and the job site for both routine and Acceptance Testing of the Work of this Section. Maintain all test equipment at the job site while work is in progress from installation of equipment racks until Owner Acceptance of this Work; thereafter remove all of this test equipment from the job site. Provide all required test cables, jigs and adapters. Provide at least one of the following items or approved functional equivalents:

2. Audio Systems:
   a. Wide Band Oscilloscope (Tektronix THS700 Series).
   b. True RMS Analog / Digital Volt-Ohm Multimeter (Fluke 187 Series or equal).
   c. Low Distortion Audio Frequency Sine Wave Oscillator (Gold Line TS1).
   d. Measurement Microphones (Earthworks M30, Bruel & Kjaer 4007, Josephson 550).
   e. Sound System Optimization and Acoustic Measurement Analyzer (Goldline TEF, Meyers SIM, SIA Smaart, WinMLS, EASERA).
   f. Harmonic Distortion Analyzer (Sound Technology or Tektronix AA 501A) or Swept Spectrum Analyzer, HP 3580A, or Swept Test System, Audio Precision or Neutrik).
3. Video Systems:
   a. Wide Band Oscilloscope (Tektronix THS700 Series).
   b. Sync & Test Generator (Tektronix 1470).
   c. Waveform/Vector Monitor (Tektronix 1740).
   d. Color Picture Monitor, Precision.
4. Communications and Related:
   a. Level II, Cat5e Cable Pair Tester (Microtest, HP, Scope, Fluke or Siemons set up to meet Category 5e parameters).
   b. Outside Plant Voice Cabling Plant Tester – capable of detecting shorts, opens, reversals, mis-wiring and crosstwists (Siemon STM-8 or equal by Mod-Tap).
   c. Metallic cable pair tester (Wavetek Corporation, Instruments Division, model LANTech 100).
   d. Tone Test Set.
   e. Optical Time Domain Reflectometer (OTDR) for fiber optics.
   f. Any other items of equipment or materials required to demonstrate conformance with the Contract Documents.

B. System Performance Testing and Adjusting Procedures
1. Upon completion of the installation of all equipment in an area, perform the following tests and record results. Verify safe and proper operation of all components, devices, or equipment, establish nominal signal levels within the systems and verify the absence of extraneous or degrading signals. Make all preliminary adjustments and document the setting of all controls, parameters of all corrective networks, voltages at key system interconnection points, gains and losses, as applicable. Submit test report. Correct all non-conforming conditions prior to requesting Acceptance Review and Testing. Perform at least the following procedures:
2. Mechanical: Verify:
   a. Integrity of all support provisions.
   b. Absence of debris of any kind, tools, etc.
3. Power and Isolated Ground: Verify:
   a. Isolation of Isolated Ground system from raceway and related ground.
   b. Grounding of devices and equipment. Integrity of signal and technical power system ground connections.
   c. Proper provision of power to devices and equipment.
4. Signal Wiring: Verify:
   a. Integrity of all insulation, shield terminations and connections.
   b. Integrity of soldered connections. Absence of solder splatter, solder bridges.
   c. Routing and dressing of wire and cable.
   d. Continuity, including conformance with wire designations on running sheets, field and shop drawings.
   e. Absence of ground faults.
   f. Polarity.
5. Use the proper sequence of energizing systems to minimize the risk of damage.
6. Audio Systems:
   a. Electronic Tests; confirm:

1) Gain at 1 kHz.
2) Maximum output.
3) Input clipping level.
4) Frequency response.
5) Total harmonic distortion.
6) Signal-to-Noise ratio.
7) Signal-to-Crosstalk ratio.

b. Electro/Acoustic Tests:
1) Uniformity of coverage.
2) Electronic and acoustic frequency response/one-third octave equalization. Measure at ear level. Comply with applicable portions of SMPTE 202, "Motion-Pictures – Dubbing Theaters, Review Rooms, and Indoor Theaters – B-Chain Electroacoustic Response." Adjust to "curve X of B chain characteristic". Representative of the Owner will direct final adjustment.
3) Maximum continuous sound pressure level (in the reverberant field). Drive systems with broadband pink noise. Sustain for at least five minutes with no system damage. Measure for "A" and "C" weightings at ear level on loudspeaker axis. Turn off noise.
4) Acoustic signal-to-noise ratio referenced to the specified maximum continuous sound pressure level in the reverberant field. Measure for "A" and "C" weightings at ear level on loudspeaker axis with mechanical systems operating. Present comparison with previous measurement.
5) Acoustic gain before feedback. Locate acoustic source (4 inch loudspeaker/pink noise generator) two feet from system microphone. Measure at system microphone position and at most distant listener position at ear level. Present comparison.

7. Video Systems:
a. Video Monitors:
1) Apply crosshatch. Verify linearity.
2) Apply red field. Adjust purity.
3) Apply SMPTE bars and PLUGE. Adjust to standards.

b. Video Path Test: Use NTC-7 procedures. Use full field or line signals. Alternately, conduct copper time domain reflectometer test.

8. Diagnostic Monitoring System:
a. Demonstrate complete operation.

9. System Overall:
a. Verify levels.
b. Provide permanent "wedge" type labels on all controls, as applies, to indicate correct settings after systems performance testing and adjustment procedures have been successfully completed.

C. Loudspeaker Assembly Testing and Adjusting Procedures
1. Upon completion of the installation of all loudspeakers in an area, perform the following tests and record results. Correct non-conforming conditions, unless the cause is clearly outside the Work of this Section, in which case submit the apparent cause to the Owner.
2. Loudspeaker Line Impedance: At terminal cabinets at equipment rooms, measure the impedance of each loudspeaker line. Sweep from at least 20 Hz to at least 16 kHz.
3. Loudspeaker Polarity: Test the acoustic polarity of all loudspeakers using an Acoustic Polarity Tester.
4. Freedom From Buzzes, Rattles and Objectionable Distortion: Individually apply to each loudspeaker line a slow sine wave sweep from 50 Hz to 5 kHz at a level of 6 dB below rated power amplifier output voltage. Listen carefully for buzzes, rattles and objectionable distortion.

5. Uniformity of Coverage: Apply broadband Pink Noise. Adjust level to approximately 70-80 dBA at measurement locations. Measure in 4 kHz octave band at ear level. Adjust loudspeaker aiming and 70 Volt loudspeaker taps for uniformity of coverage.

D. Equipment Rack and Equipment Testing and Adjusting Procedures
1. Conduct procedures in fabrication shop. Verify safe and proper operation of all components, devices, or equipment, establish nominal signal levels within the systems and verify the absence of extraneous or degrading signals. Make all preliminary adjustments and document the setting of all controls, parameters of all corrective networks, voltages at key system interconnection points, gains and losses, as applicable. Submit test report with color photographs of each equipment rack, front and back. Perform at least the following procedures:
2. Preliminary: Verify:
   a. Grounding of devices and equipment. Integrity of signal and electrical system ground connections.
   b. Proper provision of power to devices and equipment.
   c. Integrity of all insulation, shield terminations and connections.
   d. Integrity of soldered connections. Absence of solder splatter, solder bridges.
   e. Absence of debris of any kind, tools, etc.
   f. Routing and dressing of wire and cable.
   g. All wiring, including polarity and continuity, including conformance with wire designations on running sheets, field and shop drawings.
   h. Mechanical integrity of all support provisions.
3. Rig temporary power and grounding: Comply with all applicable Codes, regulations and ordinances.
4. Determine the proper sequence of energizing systems to minimize the risk of damage. Energize. Burn in for at least 120 hours.

3.13 CLEANING

A. Clean each section or area of where the work was conducted after completion to permit immediate use of the area. Remove and discard all refuse, rubbish, and debris.

B. The Contractor shall ensure that all recyclable and environmentally-hazardous waste materials are disposed properly.

C. Make good all existing structures, surfaces, and utilities affected by cutting, coring, mounting, drilling, or other new work.

D. Clean all furnished equipment of dust, dirt, finger prints, smudge, and other material prior to calling for a Substantial Performance of Work Review or Completion of Work Review.

3.14 PROTECTION

A. During the installation phase and up to the date of achieving Substantial Performance of Work, protect finished or unfinished work against damage or loss. In the event of such damage or loss, immediately replace or repair such work or equipment at no cost to the Owner.

3.15 ACCEPTANCE REVIEW AND TESTING PROCEDURES

A. Complete all Work of this Section. Submit Test Report. Submit review copies of Operating and Maintenance Manuals, less reduced set of Record Drawings. Notify the Owner in writing that the Work of this Section is complete and fully complies with the Contract Documents. Request Acceptance Review and Testing by returning Attachment “A” to the Design Consultant. The representative of the Owner will conduct Verification of Submitted

Test Data, and otherwise direct testing and adjustment of this Work. These Procedures may be performed at any hour of the day or night as required by the representative of the Owner to comply with the Project Schedule and avoid conflict with these procedures from possible ongoing work of other Separate Contracts and/or the Owner's operations. Provide all specified personnel and equipment at any time without claim for additional cost or time.

B. Personnel: Provide services of the designated supervisor and additional technicians familiar with work of this Section. Provide quantity of technicians as required to comply with Project Schedule.

C. In Addition, Provide:
1. Set of hand and power tools appropriate for performance of adjustment of and corrections to this Work.
2. Include spare wire and connectors and specified tooling for application.
3. Ladders, scaffolding and/or lifts as required to access loudspeakers and other high devices.
4. Test equipment to include but not limited to:
   a. Dual channel FFT-based audio analyzer
   b. Video test generator with color bars, grayscale, alternating pixel, multi-burst, crosshatch and % windows.
   c. InfoComm Projection Shoot-Out DVD
   d. Digital Video Essential Professional DVD
   e. Category cable tester, cable length, short, open and miswire test.
5. Complete set of latest stamped, actioned submittals of record for reference.
6. Complete set of Shop and Project Site Test Reports.
7. Complete set of manufacturer's original operation, instruction and service manuals for each equipment item for reference.

D. Demonstrate: Complete operation of all systems and equipment, including Portable Equipment.
1. General
   a. Configure room for each type of event and demonstrate audio-visual system.
   b. Connection of portable equipment. (Laptop, document camera, etc.)
   c. Demonstrate to the Consultant that all functions and equipment for the system work properly when installed as a complete system.
   d. The Contractor shall demonstrate the satisfactory operation of all controls and adjustment circuits of the system.
   e. Demonstrate system startup and shut down procedures.
2. Audio
   a. Route audio to program speakers.
   b. Connect microphone to each panel input and route through system.
   c. Demonstrate and document gain structure through the system.
   d. Audio routed to ceiling speakers.
   e. Wireless microphones.
   f. Assistive listening system.
3. Video
   a. Route source equipment (DVD, VCR, TV tuner, test generators, etc.) to video displays and projector.
   b. Set up rooms for each type of event that may take place and demo each.
4. Control
   a. Communication between control system and AV equipment, including feedback if device supports 2-way communication
   b. User interface operation.
   c. Password protection of user interface.
   d. Touch panel features and each page of control.
   e. Touch panel help file.

f. Help desk features.
g. All programmed presets.

5. The Contractor 's personnel and test equipment shall be made available to the Consultant in order that:
   a. Selected tests and measurements previously made by the Contractor can re-run.
   b. Other tests may be made at Consultant's discretion.
   c. Additional tests or measurements may be made due to changes in field conditions.
6. It is estimated that the acceptance tests and demonstrations will require approximately two hours, unless construction or installation problems or deviations from the specifications are discovered.

E. Adjust: As directed by the representative of the Owner.

F. Correct: In timely manner, failure to comply with the Contract Documents, as reasonably determined by the representative of the Owner.

G. Acceptance Documentation
1. Official acceptance of the system covered by this specification will occur when the Design-Builder receives the following written documents:
   a. A letter from the Consultant to the Architect acknowledging Final Acceptance of the system stating compliance with all articles of the specifications.
   b. A letter from the Architect to the Contractor stating that all related work has been completed to his satisfaction. Until these documents are received, the installation is not formally complete. The official date of acceptance shall be the date of the letter from the Architect to the Contractor described above.

3.16 CLOSEOUT

A. Punch List: Perform any and all remedial work, at no claim for additional cost or time. Where required, retest and submit Test Report. Notify Owner of completion of Punch List.

B. Portable Equipment: Furnish all portable equipment and spares to the designated representative of the Owner, along with complete documentation of the materials presented. Where applicable, furnish portable equipment in the original manufacturer's packing.

C. Operating and Maintenance Data: Install framed operating and maintenance instructions. Submit Manuals.

D. Project Record Documents: Submit.

E. Keys: If applicable, replace construction locks with permanent locks. Transmit keys to Owner.

F. Training: Conduct specified training and submit training manuals.

G. Warranty: Submit Warranty dated to run from date of Acceptance of the Work of this Section.

3.17 OWNER’S RIGHT TO USE EQUIPMENT

A. Acceptance of the Work of this Section will be after completion of corrections and adjustments required by the "Punch List" which results from Acceptance Review and Testing of the completed installation. The Owner reserves the right to use equipment, material and services provided as part of the Work of this Section prior to Acceptance without incurring any

obligation to Accept any equipment or completed systems until all Punch List work is complete and all systems comply with the Contract Documents; or accept any claim for additional cost or time.

Attachment "A"

NOTICE OF COMPLETION
&
REQUEST FOR FINAL INSPECTION

We hereby give notice that the work associated with the Audio-Visual system, at the project named below, is completed and fully complies with the contract documents issued to the Contractor. The required submittals below have been marked as completed.

- ☐ Programming
- ☐ Test Reports
- ☐ Operation Manual
- ☐ Maintenance Manual
- ☐ Training Manual
- ☐ Training
- ☐ Warranty Certificates
- ☐ Record Drawings

We request commissioning and verification testing be scheduled with the Owner's Representative for final system sign off. Attached is a list of test equipment for review and acceptance.

PROJECT INFORMATION

Project Name:	Project Phase:
Project Address:	

CONTRACTOR INFORMATION

Name:	Company:
Address:	
Signature:	Date:

Note to Contractor: Provide all test equipment for final inspection as described in the specification.

Please complete and fax or email this form to Veneklasen Associates attention AV Department
Fax (310) 396-3424 Email dyoung@veneklasen.com

END OF SECTION

SECTION 32 12 17 - RESIN PAVING

PART 1 - GENERAL

1.1 SUMMARY

A. Section Includes:

1. Resin Pavement Surface Course

2. Fog Seal

3. Tack Coat

4. Edge Restraints

B. Related Sections:

1. Section 01 10 10 - Sustainable Design Requirements.

2. Division 03 Section "Cast-In-Place Concrete" for formwork; material, fabrication, and installation requirements for steel reinforcement; and field quality control.

3. Division 03 Section "Landscape Architectural Concrete" for formwork; material, fabrication, and installation requirements for steel reinforcement; and field quality control.

4. Division 05 Section “Pipe and Tube Railings” for fabrication and installation requirements for pipe and tube railings.

5. Division 31 Section "Site Clearing" for removal limits of trees, shrubs, and other plantings affected by new construction.

6. Division 31 Section "Earth Moving" for building and utility trench excavation, backfilling, compacting and grading requirements, and soil materials.

7. Division 32 Section "Concrete Paving Joint Sealants" for joint sealants in contraction and other joints in cast-in-place Landscape Architectural concrete.

8. Division 32 Section “Plants” and “Turf and Grasses” for coordination with adjacent planting areas.

9. Division 32 Section “Planting Irrigation” for coordination with adjacent irrigation systems.

10. Division 32 Section “Decorative Concrete Paving”

11. Division 32 Section “Lithocrete Architectural Concrete Paving”

12. Section 01 81 13, “SUSTAINABLE DESIGN REQUIREMENTS”: LEED Requirements.

1.2 REFERENCES

A. ASTM — American Society for Testing and Materials:

1. 1. ASTM D 698 — Standard Test Methods for Laboratory Compaction Characteristics of Soil Using Standard Effort (12,400 ft-lbf/ft3 (600 kN-m/m3))

2. 2. ASTM D 1557 — Standard Test Methods for Laboratory Compaction Characteristics of Soil Using Modified Effort (56,000 ft-lbf/ft3 (2,700 kN-m/m3))

3. 3. ASTM D 1559-89 — Test Method for Resistance to Plastic Flow of Bituminous Mixtures Using Marshall Apparatus.

4. 4. ASTM D-6931 — Test Method for Indirect Tensile (IDT) Strength of Bituminous Mixtures.

5. 5. ASTM D-4123 — Test Method for Indirect Tension Test for Resilient Modulus of Bituminous Mixtures

B. US Green Building Council (USGBC), www.usgbc.org

1.3 DEFINITIONS

A. Resin Pavement: Pavement utilizing Resin Modified Emulsion and specified aggregate.

B. Finished Surface: The required final surface grade elevations of Resin Pavement indicated on the Drawings.

C. RPBE: Resin Pavement Binder Emulsion

D. RPM: Resin Pavement Mixture

E. RP: Resin Pavement

F. RPTC: Resin Pavement Tack Coat

G. RPFS: Resin Pavement Fog Seal

1.4 SUBMITTALS

A. Product Data: For each type of product indicated. Include technical data and tested physical and performance properties.

B. Samples for Verification: For each of the following:

1. Resin Paving: Manufacturer's sample, to verify color selected

2. Edging Materials and Accessories: Manufacturer's standard size, to verify color selected

C. Qualification Data: For qualified manufacturer and ~~Installer~~Contractor.

D. LEED certification product data as specified in Division 1, Section 01 81 13, “SUSTAINABLE DESIGN REQUIREMENTS”, for the following LEED credits:

1. Credit MR 4.1 & 4.2, Recycled Content

2. Credit MR 5.1 & 5.2, Regional Materials, Manufactured & Harvested / Extracted Locally

1.5 QUALITY ASSURANCE

A. Regulatory Requirements: Meet requirements of applicable laws, codes, and regulations required by authorities having jurisdiction over such work.

B. Pavement Performance: Upon request, RPM manufacturer shall submit for reference the information and contacts for no fewer than three public agency projects where the manufacturer's paving mix material has been installed and in service for a period of not less than five years, and which has a proven wear resistance surface without the continuing generation of fine particle material from the full surface of the pavement installation and does not need ongoing or regular application of additional seal coat treatments in order to preserve the integrity of the pavement.

C. Contractor~~Installer~~: The RPM is installed in a manner similar to that for hot mix asphalt mixtures using asphalt paving equipment and tools. Contractor~~Installer~~ shall be a professional paving company with appropriate equipment and personnel previously experienced in placement of asphalt pavement materials and with not less than three previous installations of the RPM product.

D. Pavement Mix Production: Pavement mix production shall be under the direction of an RPM manufacturer with not less than five years' experience in the production of RPM product. RPM shall be prepared with RPM manufacturer's mixing plant dedicated to the production of RPM product and equipped with metering controls for accurate proportioning of RPM ingredients.

E. Mockups:

1. Mock-ups shall be reviewed and approved by the Design Consultant before proceeding with the work.

2. Cast mockups of sections approximately 6'x6' section of Resin pavement to demonstrate finish, color, and standard of workmanship.

3. Use equipment to be used on remainder of work represented by the work.

4. Perform initial compaction and final compaction as would be performed for full-scale construction.

5. The Contractor shall be back charged for the costs of the Design Consultant to review more than two mock-up attempts.

6. Demolish and remove mock-ups at the completion of the project.

1.6 DELIVERY, STORAGE, AND HANDLING

A. RPM: Transport, deliver and handle RPM so as to prevent drying, moisture damage, overexposure, contamination, or freezing prior to installation.

PART 2 - PRODUCTS

2.1 MATERIALS

A. RPBE: RPM using the RPBE shall have a record of Marshall Stability test results where mixtures exceeded 10,000 pound stabilities when tested at 140°F (60°C) temperature, TSRST test results where finished mixtures demonstrated all of the low temperature performance criteria down to a temperature of -18.4°F (-28°C), and Resilient Modulus test results in accordance with ASTM D-4123 test methods demonstrating layer equivalency equal or better than conventional hot mix asphalt.

B. The RPM shall be cold-applied, display the natural coloration and texture of the aggregate material used in the mix formulation, and be suitable for vehicular and pedestrian traffic and with high strength such as that exhibited by hot mix asphaltic concrete mixtures. The RPM shall have a documented record of having performed as well or better than asphalt pavement in both wet and dry Rotational Penetrometer test evaluation of Firmness and Stability for use as an accessible outdoor surface.

C. RPM shall be sampled for testing at time of delivery to RPM Contractor~~installer~~, prior to installation of the RPM material by the Contractor~~installer~~. RPM sample shall be compacted to appropriate dimensions with specified compactive effort in laboratory Marshall Test molds while placed on top of solid metal base. Marshall Test for stability of the finished RPM mixture to be conducted in laboratory controlled conditions after a minimum of thirty (30) days curing and two hours of heating in air bath at 140°F temperature in accordance with ASTM D 1559 test requirements by an independent pavement materials testing laboratory previously experienced in testing Resin Pavement materials. These laboratory test specimens shall meet the following requirements:

Test Properties	
Property	*Value*
Stability Minimum (lbs.):	6,000

D. Stability requirements listed above are specific to the finished RPM mixture as delivered to the Contractor~~installer~~ and are not intended as a quality control standard for the installed pavement, which is the product of the work of the Contractor~~installer~~, the firmness of the base course, weather conditions during and after installation, adherence to traffic and irrigation water restrictions during pavement curing, and other variables affecting the performance of the constructed product.

E. The RPM shall have a demonstrated record of Solar Reflectance Test results where a pavement specimen constructed with the mixture exceeds the minimum reflectance of 0.3 and qualifies as a high-albedo material that reduces heat absorption as required for a LEED™ Rating System Point toward “Green Building” Certification from the U.S. Green Building Council (USGBC) as a per Credit 7.1 (Heat Island Effect) for light-colored/high albedo pavement.

F. RPTC: Same as Resin Pavement Binder Emulsion for RPM. Uniformly mix 1 part RPTC with 1 part water.

G. RPFS: Same as Resin Pavement Binder Emulsion for RPM. Uniformly mix 1 part RPSF with 4 parts water.

2.2 MANUFACTURERS

A. Basis-of-Design Product: Subject to compliance with requirements, provide "Resin Pavement"; or a comparable product by one of the following:

1. "Natural Pave XL resin Pavement" by Soil Stabilization Products Company, Inc., PO Box 2779 Merced, CA 99344-0779. (209) 383-3296 or (800) 523-9992, www.sspco.org

2. Or equal.

2.3 EDGING

A. As indicated on drawings. Adjacent paving detail to serve as an edge for the Resin Pavement

PART 3 - EXECUTION

3.1 PREPARATION OF SUBGRADE

A. Prepare subgrade per Design Consultant~~Project Engineer~~'s direction and compaction specification requirements, but in no case shall the subgrade for a RPM installation be compacted to less than 95 percent of the optimum density determined by Test Method ASTM D 698. Compaction testing to be provided by ~~project owner~~the City at a frequency of not less than one test per one hundred (100) lineal feet of RPM subgrade or not less than one test per 2,000 square feet of RPM subgrade.

3.2 INSTALLATION OF BASE COURSE FOR PAVING

A. Prepare base layer per specification requirements to provide a firm, stable and dry platform for surface course paving operations. The base layer for the RPM should be compacted uniformly to the extent necessary to provide not less than 95 percent of the optimum density as determined by Test Method ASTM D 1557. Compaction testing to be provided by ~~project owner~~the City at a frequency of not less than one test per one hundred (100) lineal feet of pavement base layer or not less than one test per 2,000 square feet of pavement base layer.

3.3 EXAMINATION

A. RPM Contractor~~Installer~~ Verification of General Conditions: Examine site and verify that conditions are suitable to proceed with the RPM installation and that no defects or errors are present which would cause a defective installation of the pavement or cause latent defects in function.

B. RPM Contractor~~Installer~~ Verification of Base Course: Verify that base course has been constructed according to directions and compaction specification requirements to the correct grades and slopes and that it is free of cracking or other damage that could reflect upward through the RP. Proof roll base course prior to paving with equipment of weight similar or heavier than the loaded delivery trucks and paving equipment and rollers that will operate on the base during pavement operations. Areas of base course that rut, crack or deflect in any manner under proof rolling should be replaced full depth and retested for compaction.

C. Verify that positive drainage conditions have been established at all locations where the RPM will be installed so that the RPM installation is protected from water ponded on the pavement surface or against the edge of the pavement or pavement base course.

D. Unsuitable Conditions: Before proceeding with work, notify the ~~owner's~~ Design Consultant representative in writing of unsuitable conditions and conflicts.

3.4 WEATHER LIMITATIONS

A. General: RPM shall not be applied when it is raining or when rain is expected. Weather forecasts should indicate no rain during application procedures and for at least 24 hours following application. The ambient temperature must be above 16 degrees C (60 degrees F) for application of RPM unless otherwise approved in writing by the RPM manufacturer. The same weather limitations apply to the application of fog seal.

3.5 EQUIPMENT FOR PLACEMENT

A. For areas accessible by paving machine, the RPM shall be placed using a self-propelled mechanized spreading and finishing machine equipped with a screed or strike off assembly capable of being accurately regulated and adjusted to a uniform depth to provide a structural section of compacted Design Thickness upon completion of final compaction. The equipment shall be inspected and cleaned prior to use to ensure that no residue from previous hot mix asphalt or other pavement placement operations will contaminate the RPM.

B. The RPM shall be compacted with a self-propelled tandem smooth drum roller of 2,400 to 3,200 pounds, capable of operation in both static and vibratory compaction modes, such as a BOMAG BW900, a MULTIQUIP VR36H or a WACKER RD11A or RD15, and a vibratory plate for areas that are inaccessible to rollers. Hand tamping equipment shall be provided for compaction in areas immediately adjacent to walls and other structures where asphalt rollers and vibratory plates cannot be operated without risk of damage to wall or structure. In combination with the self-propelled tandem smooth drum rollers described above, which must be used to compact ~~all~~ areas of pavement accessible to rollers of this size, other equipment may be used during final compaction such as self-propelled tandem smooth drum rollers of less than 1,500 pounds (such as the MULTIQUIP R-2000H), and beveled edge polypropylene lawn rollers. It is the responsibility of the Contractor~~installer~~ to review the suitability of ~~all~~ compaction equipment for project specific requirements and to operate the equipment so as not to damage the pavement mat during installation procedures.

C. During initial and final compaction operations the self-propelled tandem smooth drum roller should be parked, when not in use, upon a sheet of ¾" plywood that is placed on the pavement mat, rather than being left parked directly on the pavement surface.

D. Steel rollers and vibratory plate surfaces should ~~all~~ be inspected and cleaned of debris, grease and oil prior to use.

E. The fog seal shall be applied by pressurized equipment capable of applying the RPFS in a uniform manner at the specified application rate.

3.6 INSTALLATION OF RPM

A. Placement of RPM:

1. Do not place RPM without enough time to complete placement and initial compaction during daylight hours. RPM mix delivered to the project site should be placed in a timely manner to ensure that the mix retains its moisture content as delivered. Contractor~~Installer~~ is fully responsible to retain RPM in suitable condition for placement and measures should be taken to cover mix and protect it against drying in the case that temporary delays are encountered during the placement operation. Mix delivered should be protected against drying until placed and compacted, and ~~all~~ mix should be placed and compacted on the day of delivery.

2. RPM delivered to stockpile for paving of walkways inaccessible to delivery trucks will require additional measures to be taken by Contractor~~installer~~ to maintain mix moisture content as delivered. The stockpile should be placed on a clean paved surface to avoid contamination of RPM material. The stockpiled RPM shall be fully covered immediately following delivery with a waterproof tarp secured with sandbags or other means that effectively seal the mix from air contact and desiccation. As RPM is moved from stockpile to the placement location, the stockpile should be recovered. Stockpiled RPM in the area of the stockpile being uncovered during the placement operations should be periodically remixed with the loader bucket to maintain the proper and homogeneous mix moisture content. In special circumstances where walkway-paving work is not completed the same day as RPM delivery to stockpile, the RPM should be placed no later than the following day after remixing the full RPM stockpile with the loader bucket to maintain the proper and homogeneous mix moisture content.

3. RPM to be retained for small scale touch up work should be obtained at the time of delivery from within the RPM material in the delivery truck or from the stockpiled RPM and stored in sealed 5 gallon plastic pails and used within five days of RPM delivery.

4. Regardless of method of storage or length of storage, RPM Contractor~~installer~~ is fully responsible for protecting the quality of the RPM as delivered and for the installed pavement product.

5. For areas inaccessible by paving machine, the RPM may be installed by hand and must be placed in two lifts of equal depth. Important: Care should be taken to place the mix by raking or spreading with shovels rather than ‘dropping’ the mix when shoveling from any height. The goal is to position the mix in a manner that facilitates as uniform density as possible. Spreading the mix in this manner will result in a smoother finish after compaction with less undulation in the final surface. Immediately after the first lift of one-half the total loose thickness is placed and evenly distributed, compact the lift with the roller, applying one forward pass in vibratory mode and one reverse pass in non-vibratory mode. Compact with a minimum of five passes of a vibratory plate those areas inaccessible to the roller. Install the second lift to a depth that upon final compaction meets the specified Design Thickness and the Finished Surface Smoothness requirements (See Section 3.8 TOLERANCES). For those areas inaccessible to the roller, compact the second lift with a minimum of five passes of a vibratory plate. Go to Section 3.6.B. for Initial and Final Compaction procedures.

6. For areas where the finished compacted depth of the RP is 3 inches or less, place RPM via a single, continuous operation using a self-propelled mechanized spreading and finishing machine designed specifically for that purpose, equipped with a screen or strike-off assembly capable of being accurately regulated and adjusted to distribute a predetermined uniform depth.

7. If there are areas where the finished compacted depth of the RP is greater than 3 inches, install the RPM in two lifts

8. In areas where two lifts are required, the second and final lift of RPM may be placed without application of Tack Coat if surface of first lift is clean and restricted to traffic and second and final lift is placed within no more than 7 days following final compaction of the first RPM lift.

9. If tack coat is required, clean surface of first RPM or hot mix asphalt placement lift of debris or track on and apply tack coat no more than 10 minutes ahead of RPM placement operations.

10. Apply tack coat at rate of 0.05 gallon RPTC per square yard.

11. The second and final lift should be installed to provide a compacted depth that upon final compaction meets the specified Design Thickness and the Finished Surface Smoothness requirements (See Section 3.8 TOLERANCES).

B. Compaction: Similar to procedures used during rolling and compaction of hot mix asphalt pavement, vibratory plates and rollers should be operated by skilled roller operators taking precautions to avoid damage to the freshly placed pavement mixture. When operating vibratory plates, each vibratory compaction pass should be ended at a different location on the pavement mat and turning action directed accordingly to avoid marking pavement surface by continued turning of vibratory plate. When operating rollers in vibratory mode, the vibrators should be shut off before coming to a stop or a change of direction. Rollers should be started and stopped slowly and smoothly, coming to a complete stop before reversing direction. Rolling passes should not end at the same spot. Turning or articulation during rolling operations should be modified accordingly to avoid tearing or stress cracking the pavement mat. When rolling corners or turns, reduce the rolling speed and make multiple passes with very gradual turning action, moving over no more than 3 to 4 inches per pass, until the full area of pavement has been rolled. Changes of direction, turning or articulation of the roller should only take place when rollers are moving and should be done in a very deliberate and cautious manner.

1. Initial Compaction:

a. Begin initial rolling as soon after RPM placement as RPM will bear roller without undue displacement.

b. If RPM will not support compaction equipment, delay initial compaction until RPM achieves adequate stability to support compaction equipment but not to the point where the moisture content in the surface mat is lost which is essential to effective bonding of surface aggregates.

c. Perform initial compaction with self-propelled tandem smooth drum rollers of 1 to 2 tons capable of operation in both static and vibratory modes.

d. When working on grades 4 percent or steeper, operate equipment at slow speeds and with the drive wheel forward to the uphill direction of work progress.

e. Make three complete passes with the roller during initial compaction, forwards and backwards, while moving continuously across and overlapping each previous pass by three to five inches.

f. Test pavement surface for slope, smoothness and review surface finish after initial rolling, and correct deficiencies immediately so that finished surface will meet specified tolerances and requirements for slope, smoothness, and surface finish upon final compaction.

g. Furnish and maintain at site a clean, 10-foot long aluminum straightedge having blades of box or box-girder section with a flat bottom reinforced to ensure rigidity and accuracy available for use by the ~~owner's representative.~~Design Consultant.

2. Final Compaction

a. Begin final compaction as soon as possible once initial compaction has been completed and the specified preliminary tests of slope and smoothness completed and deficiencies are corrected.

b. Perform final compaction with self-propelled tandem smooth drum rollers and for areas inaccessible to the self-propelled tandem smooth drum rollers with the beveled edge polypropylene lawn rollers. Make no less than 5 complete rolling passes, forwards and backwards on ~~all~~ areas of pavement installation, while moving continuously across and overlapping each previous pass. The lawn rollers should be used to roll out roller marks and surface irregularities left by the smooth drum roller.

c. Do not over roll the pavement installation. Once final compaction effort has produced a pavement mat that is compressed, uniformly shaped and textured, free of roller marks and surface deformities, and meeting grade and smoothness specifications, no further compaction is required. The minimum number of compaction passes to achieve these goals is specified.

d. There may be circumstances when rolling passes will be required the day following placement and compaction in order to address roller marks and surface irregularities that remain at that time. This would be in addition to the Initial Compaction and Final Compaction specified for the day of placement. The Contractor~~installer~~ should plan for this possibility and schedule availability of roller equipment and the roller operator for the day following placement in the event that additional rolling is required.

3.7 FOG SEAL

A. Application:

1. Apply fog seal to surface of completed RP surface course not earlier than 24 hours and not later than 7 days following final compaction. The Contractor~~installer~~ is responsible for verifying that the newly placed pavement is adequately cured to support the fog seal distribution equipment before commencing the fog seal application.

2. Protect pavement surface against track on of dirt and mud until fog coat application has been completed.

3. Apply fog seal at rate of 0.02 to 0.04-gallon of RPFS per square yard.

4. Apply fog seal using pressurized distribution equipment that is designed, equipped, maintained, and operated in such a manner that RPFS may be applied uniformly at variable widths.

5. Provide a verifiable application method that will reliably place the product at controlled rates with uniform pressure.

6. Make applications in multiple passes of the distribution equipment if necessary to avoid loss of the material from run-off.

B. Curing of Fog Seal:

1. Allow fog sealed surface to dry for at least 48 hours prior to allowing traffic on pavement. Wind, temperature, humidity, and pavement surface absorbency affect drying and curing rates.

2. Restrict access following fog seal application until pick-up on tires will not occur.

3. Requirements for curing of fog seal as described above do not supercede curing time and traffic restriction requirements for the RP installation itself.

3.8 TOLERANCES

A. In-Place Compacted Thickness Variation from Design Thickness: Maximum ¼ -inch plus, minus 0 inch.

B. Finished Surface Smoothness of RP surface course: Maximum ¼ - inch variation from a 10-foot long straight edge laid parallel to the road center lines, except at intersections, grade breaks and tie-in points to adjacent pavements and hard surfaced pedestrian walking paths.

3.9 FIELD QUALITY CONTROL

A. RP Finished Surface Smoothness:

1. Test pavement continuously following initial compaction for smoothness and correct profile by laying a 10-foot straightedge on the paving finished surface parallel to road or path centerline.

2. Surface shall not vary more than ¼-inch, except at intersections, grade breaks, and tie-in points to adjacent pavements.

3. Correct areas not meeting specified surface tolerance immediately after initial compaction.

B. B. RP Course Thickness:

1. In-Place Compacted Thickness Variation from Design Thickness: Maximum ¼-inch plus/minus 0-inch.

C. If verification tests are to be conducted by ~~Project Engineer~~Contractor for In-Place Compacted Thickness, tests should be conducted immediately following final compaction. ~~Installer~~ Contractor should be previously notified to store appropriate quantity of touch-up mix in sealed container to provide for the required repairs of test areas. This test will require removal of pavement and a patch repair that will be visible as a patch in the final pavement product. Concerns of the ~~project owner~~Design Consultant regarding the appearance and location of test patches, beyond thickness and smoothness tolerances specified, will be the responsibility of the ~~Project Engineer~~design Consultant. To conduct the thickness test, remove a small section of pavement to expose base course. Measure from bottom of straight edge placed across excavation to surface of base and record distance to nearest 0.01 foot. Contractor~~Installer~~ should immediately proceed with pavement repair once measurements are taken.

3.10 REPLACEMENT OF DEFICIENT OR DAMAGED RP

A. Areas to be Replaced:

1. Replace full depth of RP thickness if RPM is contaminated or if paving work is defective.

B. Edges of Replaced Pavement:

1. Cut edges of RP to be removed so that sides are vertical and oriented perpendicular and parallel to direction of traffic.

2. Spray edges with a tack coat of RPTC.

C. Installation:

1. After applying tack coat, place RPM in areas where paving was removed in sufficient quantity that will allow finished surface to conform to elevation and tolerance requirements after final compaction.

2. Thoroughly compact RPM so that cured patch meets requirements specified herein.

3.11 PROTECTION

A. Traffic Restriction:

1. Do not permit traffic on pavement surface until curing is complete. Protect pavement surface against traffic until pavement has cured sufficiently to support traffic without marring, rutting, tearing, distressing, or damaging the pavement. Utilize warning signs, barricades, and protection fencing to protect pavement from traffic. If the pavement structural section design and edge design are for pedestrian and bicycle traffic only, then restoration of traffic applies to pedestrian and bicycle traffic only. If the pavement structural section design and edge design are for light duty vehicular traffic use only, then restoration of traffic applies to light duty vehicular traffic only. Damage to the pavement by contractor construction equipment and construction truck traffic will be the responsibility of the contractor to repair.

2. The general guidance in regards to traffic restriction requirements below in Item 3 (Section 3.11.A.3) does not supercede the responsibilities of the ~~Installer~~Contracto and Design Consultant~~, Project Engineer and Project Owner~~ to protect the newly installed pavement as addressed above in Item 1 (Section 3.11.A.1), and to make the final determination in regards to the status of the curing pavement layer for restoration of traffic. As further addressed in Item 3 below (Section 3.11.A.3), shaded areas will cure more slowly and may require more lengthy traffic restriction than areas receiving full sun exposure.

3. The curing rates of RP installations are greatly influenced by temperature conditions during and subsequent to installation, but many other variables come in to play such as base course moisture conditions, humidity, rainfall interruptions during the curing period, wind velocity, day length, sunlight angle, and degree of shading. Lower sun angles create increased shading and shorter day lengths further limit the amount of sun exposure, typically resulting in the need to extend traffic restrictions beyond the following temperature related guidelines. The combination of cooler weather and a high degree of shading greatly slows RP curing and may require localized traffic restriction, while RP receiving full sun exposure will no longer need to be protected. Periods of rainfall during the curing period can add extra days to the minimum number of dry weather curing days required, particularly if the base course underneath the pavement becomes saturated by water ponded against the edge of pavement by heavy rainfall or other sources of water. Additional traffic restrictions may be required until excess water evaporates out of the base course and permits the lower portion of the pavement to dry back and cure.

   a. For RP placed in temperatures of 70°F (21.1°C) or warmer, traffic should be restricted following final compaction for a minimum of 5 days of dry weather curing with temperatures of 70°F (21.1°C) or warmer.

   b. For RP placed in temperatures of 60°F (15.55°C) to 70°F (21.1°C), traffic should be restricted following final compaction for a minimum of 7 days of dry weather curing with temperatures of 60°F (15.55°C) or warmer.

B. Drainage and Irrigation Water Restriction:

1. Provide drainage during construction to prevent water from collecting or standing on or adjacent to areas to be paved or areas of freshly placed pavement.

2. ~~Installer~~ Contractor shall notify ~~Project Engineer~~Design Consultant and require notification of ~~project owner~~the City, facility manager and landscape maintenance staff that landscape irrigation water is to be absolutely restricted from the pavement surface or from ponding near pavement edges during the full period of traffic restriction as required above in Item 1 (Section 3.11.B.1). Landscape watering in the vicinity of the newly installed RP during the traffic restriction period should be conducted by hand watering and timers for automatic sprinkler and watering systems should be shut off with explanatory written notices attached.

END OF SECTION

SECTION 32 13 16 - DECORATIVE CONCRETE PAVEMENT

PART 1.0 - GENERAL

1.1 SUMMARY

A. Section Includes: Furnishing of services, labor, materials, transportation, tools and equipment necessary to perform the work indicated on the Drawings and specified herein as required to properly complete the work in this contract.

B. This Section includes the following:

1. Cement concrete pavement.

C. Related Sections include the following:

1. Section 01 10 10 - Sustainable Design Requirements.
2. Division 03 Section "Cast-In-Place Concrete" for formwork; material, fabrication, and installation requirements for steel reinforcement; and field quality control.
3. Division 03 Section "Landscape Architectural Concrete" for formwork; material, fabrication, and installation requirements for steel reinforcement; and field quality control.
4. Division 05 Section “Pipe and Tube Railings” for fabrication and installation requirements for pipe and tube railings.
5. Division 31 Section "Site Clearing" for removal limits of trees, shrubs, and other plantings affected by new construction.
6. Division 31 Section "Earth Moving" for building and utility trench excavation, backfilling, compacting and grading requirements, and soil materials.
7. Division 32 Section "Concrete Paving Joint Sealants" for joint sealants in contraction and other joints in cast-in-place Landscape Architectural concrete.
8. Division 32 Section “Plants” and “Turf and Grasses” for coordination with adjacent planting areas.
9. Division 32 Section “Planting Irrigation” for coordination with adjacent irrigation systems.
10. Division 32 Section “Decorative Concrete Paving”
11. Division 32 Section “Lithocrete Architectural Concrete Paving”
12. Section 01 81 13, “SUSTAINABLE DESIGN REQUIREMENTS”: LEED Requirements.

1.2 REFERENCES

A. Conform to the following codes and standards:

1. Section 01 10 10 - Sustainable Design Requirements.
2. American Concrete Institute (ACI)

3. American Society" for Testing and Materials (ASTM): The specifications and standards hereinafter referred.

4. Standard Specifications for Public Works Construction 2000

B. US Green Building Council (USGBC), www.usgbc.org

1.3 DEFINITIONS

A. Cementitious Materials: Portland cement alone or in combination with one or more of blended hydraulic cement, fly ash and other pozzolans, and ground granulated blast-furnace slag.

1.4 SUBMITTALS

A. Comply with Section 01330 Submittal Procedures and Section 01 10 10 - Sustainable Design Requirements.

B. Product Data: Furnish manufacturer's product specifications and installation instructions for the following and for each type of product indicated.

1. Clear sealer
2. Curing agents
3. Dowels
4. Expansion joint filler material
5. Fiber reinforcement
6. Finish retardant
7. Form release agent
8. Integral color/ color admixture
9. Joint sealant

C. Products; Submit one pound samples, clearly identified, for each component used to prepare each paving type, including but not limited to:

1. Coarse Aggregate

D. Design Mixtures: Furnish certified reports of proposed mix design for each type of concrete installation. For each decorative cement concrete pavement mixture. Include alternate mixture designs when characteristics of materials, Project conditions, weather, test results, or other circumstances warrant adjustments.

1. Provide documentation for each paving type specified on Drawings that will enable Design Consultant's to better match replaced concrete:

2. Submit laboratory test reports for concrete materials and a certificate with each concrete mixer truck, stating mix design, PSI, rating, slump, water and cement quantity, cement/water ration, fine and coarse aggregate and color additives.

a. Cement:

i. Manufacturer and plant location.

ii. Cement type, i.e. Type I, II, III, or V.

b. Admixtures:

i. Manufacturer and plant location.

c. Sand:

i. Source and Type.

d. Aggregates:

i. Source and Type.

3. Signed certification from a licensed structural engineer.

E. Coordinate paragraph below with qualification requirements in Division 1 Section "Quality Control" and as supplemented in "Quality Assurance" Article.

1. Qualification Data: For ~~Installer~~Contractor.

a. Contractor~~Installer~~: Provide evidence to indicate successful experience in providing decorative concrete work similar to that specified herein and can demonstrate successful experience through past Project documentation and references.

b. Experience: Minimum 5 years experience in the installation of patterned concrete paving.

c. Demonstration of Experience: 10 Projects which have been completed within the past 36 months utilizing similar products, scope and complexity.

d. Supervision: Perform placement and finishing of concrete work under supervision of a person having a minimum of 5 years of experience in placement and finishing of products specified herein.

2. Submit qualifications to Design Consultant for information purposes. Submit a resume of Project Manager and Superintendent who will be overseeing the Work.

3. Minutes of preinstallation conference.

4. Delivery slips.

F. Certification that Design Consultant's sample panels (if provided) have been reviewed and that materials and processes provided will achieve intended effects indicated on Design Consultant's sample panel.

G. Submittals for above items shall be made in one package. If submittals are judged incomplete or non-responsive to the directions of the Design Consultant after three submissions the Contractor shall be back charged for the Design Consultants costs to process additional Submittals. Additional Submittal Procedures are specified in Section 01300.

H. LEED certification product data as specified in Division 1, Section 01 81 13, "SUSTAINABLE DESIGN REQUIREMENTS", for the following LEED credits:

1. Credit MR 4.1 & 4.2, Recycled Content
2. Credit MR 5.1 & 5.2, Regional Materials, Manufactured & Harvested / Extracted Locally

1.5 QUALITY ASSURANCE

A. Contractor~~Installer~~ Qualifications: An employer of workers trained and approved by manufacturer of decorative cement concrete pavement systems.

B. Pre-Bid Conference: Prior to submitting bid, attend pre-bid conference with Design Consultant to review Design Consultant's production run quality samples of specified concrete colors and finishes and to review requirements and artistic effect desired.

C. Slip Resistance: Provide a finish surface slip resistance coefficient of friction equal or greater than 0.6 for flat surfaces and 0.8 for ramps, when tested in accordance with ASTM F 489.

D. Ready-Mix-Concrete Producer Qualifications: A firm experienced in manufacturing ready-mixed concrete products and that complies with ASTM C 94/C 94M requirements for production facilities and equipment.

1. Producer certified according to NRMCA's "Certification of Ready Mixed Concrete Production Facilities."

E. Testing Agency Qualifications: An independent agency qualified according to ASTM C 1077 and ASTM E 329 for testing indicated, as documented according to ASTM E 548.

1. Personnel conducting field tests shall be qualified as ACI Concrete Field Testing Technician, Grade 1, according to ACI CP-01 or an equivalent certification program.

F. Source Limitations: Obtain decorative cement concrete pavement products and each type or class of cementitious material of the same brand from the same manufacturer's plant and each aggregate through one source.

G. ACI Publications: Comply with ACI 301, "Specification for Structural Concrete," unless modified by requirements in the Contract Documents.

H. Concrete Testing Service: Engage a qualified independent testing agency to perform

material evaluation tests and to design concrete mixtures.

I. Referee Panels: The Design Consultant will provide production run quality samples of specified concrete paving colors and finishes to be used as Referee Panels to judge the Field Mock-ups. The Design Consultant will provide information and assist the Contractor on the mix design components used to achieve the Referee Panels.

J. Mockups:

1. Cast mockups of sections approximately 60inches by 60-inches of decorative cement concrete pavement to demonstrate typical pattern, texture, surface finish, color, joints, caulking, sealer and standard of workmanship.

2. Build mockups in the location and of the size indicated or, if not indicated, as directed by Design Consultant. Include joints and joint materials, caulking, sealer and scoring treatments specified on the plans.

3. If multiple colors and finishes are specified, samples are required for each paving type and mock ups shall be prepared for review at the same time.

4. In presence of Design Consultant, damage part of the exposed surface of decorative cement concrete pavement for each finish, color, and texture required, and demonstrate materials and techniques proposed for repair to match adjacent undamaged surfaces.

5. The Mock-ups shall be reviewed and approved by the Design Consultant before proceeding with the work. Mock-ups will be judged against the appearance of the Referee Panels. Mock-ups that do not match the Referee Panels and do not demonstrate all specified joints and joint materials, caulking, and scoring treatments will be rejected. Remove and reconstruct the mock-ups until approved. The Contractor shall be back charged for the costs of the Design Consultant to review more than two mock-up attempts. Approved mock-ups shall serve as standard of acceptance for paving work and remain available for the duration of the project.

6. Demolish and remove mock-ups at the completion of the project.

K. Preinstallation Conference: Conduct conference at Project site to comply with requirements in Division 1 Section "Project Meetings" and Quality Control."

1. Before submitting design mixtures, review decorative cement concrete pavement mixture design and examine procedures for ensuring quality of concrete materials and decorative cement concrete pavement construction practices. Require representatives of each entity directly concerned with decorative cement concrete pavement to attend, including the following:

a. Contractor's superintendent.

b. Independent testing agency responsible for concrete design mixes.

c. Ready-mix concrete producer.

d. Decorative cement concrete pavement Contractor~~Installer~~.

2. Manufacturer's representative of decorative cement concrete pavement system.

L. Formwork: Comply with Recommended Practice for Concrete Formwork, ACI 347.

1.6 PROJECT CONDITIONS

A. Traffic Control: Maintain access for vehicular and pedestrian traffic as required for other construction activities.

1.7 DELIVERY AND HANDLING

A. Conform to Section 01600 Product Requirements.

B. Deliver, store, and handle reinforcement to prevent damage.

1.8 REGULATORY REQUIREMENTS

A. Testing: Slump tests shall be taken to certify compliance with mix design. Slump shall be in accordance

B. Mix design shall be in accordance with ACI 211-6.with ASTM C 143.

C. Conform to applicable laws, codes, and regulations required by authorities having jurisdiction over the work.

1.9 SITE CONDITIONS

A. Do not place concrete when subbase surface temperature is less than 40 degrees F, nor when surface is wet.

1.10 COORDINATION

A. In accordance with Section 03 20 03.

B. Ensure that irrigation sleeves, electrical conduit, food cart outlets, and other utility elements are accommodated and as-built located prior to pouring concrete.

1.11 INSPECTION OF SITE

A. Verify conditions at site affect Work of this Section, and take field measurements as requires. Report major discrepancies between Drawings and field dimensions to Design Consultant prior to commencing work.

PART 2.0 - PRODUCTS

2.1 MANUFACTURERS

A. In other Part 2 articles where titles below introduce lists, the following requirements apply to product selection:

B. Products: Subject to compliance with requirements, provide one of the products specified.

C. Manufacturers: Subject to compliance with requirements, provide products by one of the manufacturers specified.

2.2 FORMS

A. Form Materials: Either steel or wood, of size and strength to resist movement during concrete placement and to retain horizontal and vertical alignment until removal. Use forms that are free of distortion and defects.

B. Plywood, metal, metal-framed plywood, or other approved panel-type materials to provide full-depth, continuous, straight, and smooth exposed surfaces.

1. Use flexible or curved forms for curves of a radius 100 feet or less.

2. Flexible spring steel forms, laminated boards, or bender boards to form radius bends as required.

C. Forms for Textured Finish Concrete: Units of face design, size, arrangement, and configuration indicated. Provide solid backing and form supports to ensure stability of textured form liners.

1. Form work to be new, #2 grade Douglas Fir, free of knots, checks, bows, and cracks.

D. Form-Release Agent: A non-staining form release compound that will not discolor or deface the surface of the concrete. Commercially formulated form-release agent that will not bond with, stain, or adversely affect concrete surfaces and will not impair subsequent treatments of concrete surfaces.

1. Formulate form-release agent with rust inhibitor for steel form-facing materials.

2. Final acceptance of form release agent depends on proven performance on mock up panels.

3. Acceptable Manufacturers:

a. Atlas Release (858) 277-2100

2.3 STEEL REINFORCEMENT

A. Plain-Steel Welded Wire Fabric Reinforcement: ASTM A 185, fabricated from as-drawn steel wire into flat sheets. 6 x 6 x W4.0 x W4.0 conforming to ASTM A 185. Furnished in flat sheets, not rolls, unless otherwise accepted by the Design Consultant.

B. Reinforcing Bars: ASTM A 615/A 615M, Grade 60; deformed.

1. Grade 40 or 60 billet steel conforming to ASTM A 626/615M. Bending process shall conform to the Manual of Standard Practice of the Concrete Reinforcing Steel Institute. Kinked bars shall not be used.

2. Reinforcing Steel: Conforming to ASTM A 615, clean and free of rust, dirt, grease or oils.

C. Steel Bar Mats: ASTM A 184/A 184M; with ASTM A 615/A 615M, Grade 60, deformed bars; assembled with clips.

D. Plain Steel Wire: ASTM A 82, as drawn.

E. Joint Dowel Bars: Plain steel bars, ASTM A 615/A 615M, Grade 60. Cut bars true to length with ends square and free of burrs.

F. Plastic dowel alignment sleeves Products:

1. Speed Dowel or equal (no known equal).

G. Bar Supports: Bolsters, chairs, spacers, and other devices for spacing, supporting, and fastening reinforcing bars, welded wire reinforcement, and dowels in place. Manufacture bar supports according to CRSI's "Manual of Standard Practice" from steel wire, plastic, or precast concrete or fiber-reinforced concrete of greater compressive strength than concrete, and as follows:

H. Equip wire bar supports with sand plates or horizontal runners where base material will not support chair legs.

I. Polypropylene Fiber Reinforcement: 100% virgin multifilament polypropylene fibers, engineered and designed for secondary reinforcement of concrete slabs, complying with ASTM C 1116 - Type III.

1. Acceptable Manufacturers:

a. Fibermix®; Stealth® Fibers – 1/4” long (423)892-8080 or www.fibermesh.com.

b. Forta Fiber; Microfiber (800)245-0306.

c. Grace Construction Products; MicrofiberTM (800)433-0020 or www.grace.com.

2. Application Rate: 1/2 lb./cy of mix.

2.4 CONCRETE MATERIALS

A. Cementitious Material: Use one of the following cementitious materials, of the same type, brand, and source, throughout Project:

1. Gray Portland Cement: ASTM C 150, Type II

B. Refer to Drawings for specific paving finishes requiring different cement types, to include Type II cements (unless otherwise identified in the Drawings) conforming to ASTM C 150.

C. Use same brand of cement from single source throughout entire Project for each paving type.

D. Refer to Statement of Mix Design for cement type used.

E. Fly Ash: ASTM C 618, Class F.

F. Ground Granulated Blast-Furnace Slag: ASTM C 989, Grade 100 or 120.

G. Normal-Weight Aggregates: ASTM C 33, uniformly graded. Provide aggregates from a single source with documented service record data of at least 10 years' satisfactory service in similar pavement applications and service conditions using similar aggregates and cementitious materials.

H. Maximum Aggregate Size: Refer to Drawings for maximum aggregate size.

I. Coarse Aggregate: Aggregate composed of gravel, crushed rock, or a blended mixture conforming to Standard Specifications Section 200-1.4. Aggregates shall be washed clean, uniformly screen graded, and contain not more than 2% by weight of deleterious materials such as shale, schist, alkali, clay lumps, earth loam, mica, or similar materials.

J. Clean, hard, and durable coarse aggregate, conforming to ASTM C 33.

K. Use same coarse aggregate from single source throughout entire Project.

L. Refer to Statement of Mix Design for coarse aggregate type used.

M. Aggregates shall be washed clean, uniformly screen graded, and contain not more than 2% by weight of deleterious materials such as shale, schist, alkali, clay lumps, earth loam, mica, or similar materials.

N. Fine Aggregate: Free of materials with deleterious reactivity to alkali in cement.

1. Sand shall consist of a natural or manufactured granular material, or combination thereof, free of deleterious amounts of organic material, mica, loam, clay and other substances not suitable for the purpose intended. Sand shall be washed and conform to Standard Specifications Section 200-1.5.3.

O. Clean, hard, and durable washed concrete sand, conforming to ASTM C 33.

P. Use same fine aggregate from single source throughout the entire Project.

Q. Refer to Statement of Mix Design for fine aggregate type used.

R. Sand shall be free of deleterious amounts of organic material, mica, loam, clay and other substances not suitable for the purpose intended.

S. Base Material: Washed concrete sand, uniformly graded and meeting the requirements of Standard Specifications Section 200-2.2. At the time of spreading, the material shall have a moisture content sufficient to obtain the required compaction.

T. Structural Soil Base: Structural “CU” soil base material available through Hanson Aggregates (refer to Structural Soil specification Division 32. Refer to drawings for extend of concrete paving on structural soil.

U. Water: Potable and complying with ASTM C 94/C 94M. Free from deleterious materials such as oils, acids, and organic matter.

V. Air-Entraining Admixture: ASTM C 260.

W. Chemical Admixtures: Provide admixtures certified by manufacturer to be compatible with other admixtures and to contain not more than 0.1 percent water-soluble chloride ions by mass of cementitious material.

1. Water-Reducing Admixture: ASTM C 494/C 494M, Type A.

2. Water-Reducing and Retarding Admixture: ASTM C 494/C 494M, Type D.

3. Water-Reducing and Accelerating Admixture: ASTM C 494/C 494M, Type E.

2.5 ADMIXTURES

A. Provide concrete admixtures that contain not more that 1 percent chloride ions and no calcium chloride.

B. Water-Reducing Admixture: ASTM 4 94, Type A.

C. High-Range Water-Reducing Admixture: ASTM C 494, Type F or Type G.

D. Water-Reducing and Retarding Admixture: ASTM C 494, Type D or E.

E. Acceptable Manufacturers:

1. Water-Reducing Admixtures:

a. ChemMasters Corp; Chemtard.

b. Cormix Construction Chemicals: Type A Series.

c. Euclid Chemical Company; Eucon WR-75.

2. High-Range Water-reducing Admixtures:

a. Anti-Hydro Co. Inc.: super P.

b. Cormix Construction Chemicals: Cormix 2000, PSI Super.

c. Euclid Chemical Company; Eucon 37.

3. Water-Reducing and Acceleration Admixtures:

a. Conspec Marketing & Manufacturing Company; Q-Set.

b. Cormix Construction Chemicals; Gilco Accelerator or Lub NCR.

c. Euclid Chemical Company; Lithochrome Surface Retarder.

2.6 COLOR MATERIALS

A. Color Pigment: ASTM C 979, synthetic mineral-oxide pigments or colored water-reducing admixtures; color stable,[free of carbon black, nonfading, and resistant to lime and other alkalis.

B. Integral Color: Integrally color concrete in colors, blending mixtures and application rates necessary to create colors, gradations, and variations to match Design Consultant's mock-up.

C. Manufacturers:

1. As listed on the Drawings or As selected by the Design Consultant.

2.7 CURING MATERIALS

A. Absorptive Cover: Burlap cloth made from jute or kenaf, weighing approximately 9 oz. per square yard, complying with AASHTO M 182, Class 2.

B. Moisture-Retaining Cover: One of the following complying with ASTM C 171:

1. Waterproofing paper.

2. Polyethylene film.

3. White burlap-polyethylene sheeting.

C. Clear, Waterborne Membrane-Forming Curing Compounds:

1. Provide curing materials that have a maximum volatile organic compound (VOC) rating of 350 g/l.

D. Evaporation Control: Monomolecular film-forming compound applied to exposed concrete

slab surfaces for temporary protection from rapid moisture loss.

1. Clear, Waterborne Membrane-Forming Curing Compounds Acceptable Manufacturers:
   a. Anti-Hydro Company; Clear Cure Water Base.
   b. The Burke Company; Spartan Cote WB.
   c. Cormix Construction Chemicals; Sealco VOC.

2. Acceptable Evaporation Control Manufacturers:
   a. Conspec Marketing and MFG. Company; Aquafilm.
   b. Euclid Chemical Company; Eucobar.
   c. L&M Construction Chemicals; E-Con.

E. Curing Paper: Nonstaining, waterproof paper, consisting of two layers of kraft paper cemented together and reinforced with fiber, complying with ASTM C 171.

F. Surface Retarder: Waterborne, monomolecular film forming, manufactured for application to fresh concrete.

1. Products:
   a. Top Cast/Top Face by Grace Products
   b. Rugasol

G. Sealer: Waterbased Clear siloxane or silane penetrating sealer. Acceptable products include, but not limited to:
   a. Prosoco SLX100 Stand Off
   b. Aquapel Plus, L&M Construction Chemicals.(800) 362-3331
   c. Glaze n' Seal, Natural Look or Wet Look
   d. Colorcure Curing Agent and Concrete sealer with integral color, L.M.Scofield Company;
   e. CureSeal Curing Agent and Clear Sealer. L.M. Scofield Company
   f. Cementone Clear Sealer. L.M.Scofield Company;
   g. Baracade WB ORS The Euclid Chemical Company
   h. VOCOMP – 20R, WR Meadows Sealtight
   i. Superstone; Clear Sealer.
   j. Lambert; Clear Sealer.
   k. Weather Worker J-26 WB

H. Clear, Waterborne, Membrane-Forming Curing and Sealing Compound: ASTM C 1315, Type 1, Class A, specifically manufactured for use with colored concrete.

1. Products:
   a. Cureseal, Scofield

2.8 JOINT MATERIALS

A. Expansion- and Isolation-Joint Materials: -

1. Filler Strips: Premoulded material, 3/8” thick, depth as required by slab, of resilient, non-bituminous material, depth as required by slab.

2.9 RELATED MATERIALS

A. Bonding Agent: ASTM C 1059, Type II, non-redispersible, acrylic emulsion or styrene butadiene.

B. Epoxy Bonding Adhesive: ASTM C 881, two-component epoxy resin, capable of humid curing and bonding to damp surfaces, of class suitable for application temperature and of grade to requirements, and as follows:

2.10 CONCRETE MIXTURES

A. Prepare design mixtures, proportioned according to ACI 301and ACI 318, for each type and strength of normal-weight concrete determined by either laboratory trial mixes or field experience.

1. Mix design shall be the responsibility of the Contractor.
2. Contractor shall employ a Testing Laboratory approved by the Design Consultant under the active direction of the Design Consultant, who shall determine mix designs to fulfill the specified requirements for strength, aggregate size and workability of concrete, and such designs shall be used in proportioning structural concrete.
3. Mix designs shall be submitted to the Design Consultant for review at least 10 days prior to scheduled concrete pour.
4. Review by the Design Consultant shall not be considered unqualified approval, and shall not relieve the Contractor of his responsibility to furnish concrete of proper consistency and specified strengths.
5. Provide concrete of the strengths indicated in the structural general notes
6. Use a qualified independent testing agency for preparing and reporting proposed concrete mixture designs for the trial batch method.

B. Proportion mixtures to provide normal-weight concrete with the following properties:

1. Compressive Strength (28 Days): As indicated in the Drawings or 2500 psi.
2. Maximum Water-Cementitious Materials Ratio at Point of Placement: 0.61
3. Slump Limit: 5 inches.

C. Add air-entraining admixture at manufacturer's prescribed rate to result in normal-weight concrete at point of placement having an air content as follows:

1. Air Content: 2 percent

D. Chemical Admixtures: Use admixtures according to manufacturer's written instructions.

1. Use water reducing admixture and retarding admixture [and accelerating admix-

ture in concrete, as required, for placement and workability.

2. Use water-reducing and retarding admixture when required by high temperatures, low humidity, or other adverse placement conditions.

2.11 PAVING TYPES

A. Concrete Paving Types 1: Refer to landscape drawings for concrete paing types and finishes

B. Color Pigment: Add color pigment or colored water-reducing admixture to concrete mixture according to manufacturer's written instructions and to result in hardened concrete color consistent with approved mockup.

2.12 CONCRETE MIXING

A. Ready-Mixed Concrete: Measure, batch, and mix concrete materials and concrete according to ASTM C 94/C 94M.Furnish batch certificates for each batch discharged and used in the Work.

1. When air temperature is between 85 deg F and 90 deg F, reduce mixing and delivery time from 1-1/2 hours to 75 minutes; when air temperature is above 90 deg F, reduce mixing and delivery time to 60 minutes.

PART 3.0 - EXECUTION

3.1 EXAMINATION

A. Examine the site and verify that no defects or errors are present that would cause defective installation or latent defects in the workmanship and function. Report unsatisfactory conditions to the Design Consultant. Do not begin paving work until unsatisfactory conditions have been corrected and the area is ready to receive the work. Continuing with the installation constitutes acceptance of the unsatisfactory conditions and responsibility for satisfactory performance.

B. Verify that paving subgrade consists of a minimum of 4-inches of compacted washed concrete sand, passes less than 7% through a #200 sieve, and is compacted to at least 95% of the materials ASTM D 1557 maximum dry density for its full depth.

C. Verify that paving subgrade extends 1-foot beyond the outside edge of paving or curbing and has positive outfall for trapped water.

D. Proof-roll prepared subbase surface to check for unstable areas and verify need for additional compaction. Do not begin paving work until such conditions have been corrected and are ready to receive paving.

E. Remove loose material from compacted subbase immediately before placing concrete.

F. Provide necessary chairs or supports, and maintain position of reinforcing bars.

G. Wet surface of sand subgrade prior to placing concrete.

H. Examine exposed subgrades and subbase surfaces for compliance with tolerances for dimensional, grading, and elevation tolerances.

I. Proof-roll prepared subbase surface with heavy pneumatic-tired equipment to identify soft pockets and areas of excess yielding.

J. Completely proof-roll subbase in one direction[and repeat in perpendicular direction]. Limit vehicle speed to 3 mph.

K. Proof-roll with a loaded 10-wheel, tandem-axle dump truck weighing not less than 15 tons.

L. Subbase with soft spots and areas of pumping or rutting exceeding depth of 1/4 inch require correction according to requirements in Division 2 Section "Earthwork."

M. Proceed with decorative cement concrete pavement operations only after nonconforming conditions have been corrected and subgrade is ready to receive pavement.

N. Synthetic Fiber reinforcement; ½ lb. per cubic yard of mix added at batch plant.

O. Adjustment to Concrete Mixes: Mix design adjustments may be required by Contractor when characteristics of material, Project conditions, weather, test results, or other circumstances warrant.

P. Coordinate with other trades, placement of accessories, chases, and other embedded items. Provide sufficient time to complete installation of their work.

3.2 SURFACE PREPARATION

A. Remove loose material from compacted subbase surface immediately before placing concrete.

B. Protect adjacent construction from discoloration and spillage during application of color hardeners, release agents, stains, curing compounds, and sealers.

C. Subgrade Preparation: Unless noted otherwise, subgrades shall be compacted to a relative density as specified in the soils report, and to elevations necessary to achieve the finished surface indicated. Semi-porous subgrades shall be sprinkled sufficiently with water to eliminate suction and extremely porous subgrades shall be sealed in an approved manner.

D. Base Preparation: Where indicated, washed concrete sand or structural “CU soil base material shall be deposited at a uniform quantity that will provide the required compacted thickness within ¼” above or below the grade determined from the Drawings. The relative compaction of the base material shall not be less than specified in the soils report. Compacted areas that do not conform to the requirements specified, shall be reworked,

watered, and thoroughly re-compacted to conform to the specified requirements.

3.3 EDGE FORMS AND SCREED CONSTRUCTION

A. Shall conform to the shape, lines, and dimensions as called for on the Drawings.

B. Completed formwork shall be free of hardened concrete, washed clean and shall have excess water removed, reinforcement secured in place, expansion joint material and other embedded items positioned, forms shall be thoroughly cleaned, washed out with water, and made tight. Before reinforcing steel is placed on top of or adjacent to forms that have been sealed, the surface sealer shall be wiped off so that none may be tracked over or come in contact with the reinforcing steel. Bottoms of forms shall be cleaned and wet down before placing concrete.

C. Set, brace, and secure edge forms, bulkheads, and intermediate screed guides for pavement to required lines, grades, and elevations. Install forms to allow continuous progress of work and so forms can remain in place at least 24 hours after concrete placement.

D. Clean forms after each use and coat with form-release agent to ensure separation from concrete without damage

E. Check completed formwork and screeds for grade and alignment to following tolerances:

1. Top of Forms: Not more that 1/8-inch in 10-feet.

2. Vertical Face on Longitudinal Axis: Not more that ¼-inch in 10-feet.

3. Joints and Corners: Construct forms such that joints occur at approved locations. Form intersecting planes to provide true, crisp corner with no edge grain of forms exposed to the face of the concrete. Construct exposed corners to produce smooth, solid, unbroken lines.

3.4 STEEL REINFORCEMENT

A. General: Comply with CRSI's "Manual of Standard Practice" for fabricating, placing, and supporting reinforcement.

B. Sized and placed where indicated on the Drawings.

C. The complete work shall be in place and approved a minimum of one working day prior to placing of concrete.

D. Clean reinforcement of loose rust and mill scale, earth, ice, or other bond-reducing materials.

E. Arrange, space, and securely tie bars and bar supports to hold reinforcement in position during concrete placement. Maintain minimum cover to reinforcement.

F. Wire Mesh: Panels shall be spliced not less than two mesh openings, and shall be in placed one working day prior to placing concrete. While the concrete is still plastic, the mesh shall be carefully lifted into position as specified on the Drawings.

G. Install welded wire reinforcement in lengths as long as practicable. Flat sheets, not rolls unless otherwise accepted by Design Consultant. Lap adjoining pieces at least one full mesh, and lace splices with wire. Offset laps of adjoining widths to prevent continuous laps in either direction.

H. Reinforcing Bars: Bars shall be place in accordance with the size and spacing shown of the Drawings. The bars shall be firmly and securely wired together and held in place with concrete or metal chairs. The complete work shall be in place and approve a minimum of one working day prior to placing of concrete.

I. Install fabricated bar mats in lengths as long as practicable. Handle units to keep them flat and free of distortions. Straighten bends, kinks, and other irregularities, or replace units as required before placement. Set mats for a 2-inch overlap to adjacent mats.

J. Dowel: Speed Dowels, or equal (no known equal). Before reinforcing steel is placed on top of or adjacent to forms that have been sealed, the surface sealer shall be wiped off so that none may be tracked over or come in contact with the reinforcing steel. Bottoms of forms shall be cleaned and wet down before placing concrete.

3.5 JOINTS

A. General: Construct construction, isolation, and contraction joints and tool edgings true to line with faces perpendicular to surface plane of concrete. Construct transverse joints at right angles to centerline, unless otherwise indicated.

1. When joining existing pavement, place transverse joints to align with previously placed joints, unless otherwise indicated.

2. Locate as indicated on the Drawings.

B. Construction Joints or Expansion Joints: Set construction joints at side and end terminations of pavement and at locations where pavement operations are stopped for more than one-half hour, unless pavement terminates at isolation joints.

1. Continue steel reinforcement across construction joints, unless otherwise indicated. Do not continue reinforcement through sides of pavement strips, unless otherwise indicated.

2. Provide tie bars at sides of pavement strips where indicated.

3. Dowels: Provide steel dowels across construction joints to reduce differential movement across the joint. Utilize steel dowels based upon the following:

a. 6-inch Thick Pavement:

Diameter: ½-inch.

Length: 24-inch.

On-center Spacing: Per reinforcing schedule.

b. 4-inch Thick Pavement:

Diameter: ½-inch.

Length: 24-inch.

On-center Spacing: Per reinforcing schedule.

4. To assist in correct alignment of steel dowels along construction joints use Speed Dowel™ plastic dowel alignment sleeves:

   a. Insure that wood edge forms are true to line ands grade prior to installing plastic dowel alignment sleeves.

   b. Install plastic dowel sleeves on wood forms at the specified on-center dowel spacing, centered between top and bottom of wood farm.

C. Expansion/ Isolation Joints: Form isolation joints of preformed joint-filler strips abutting concrete curbs, catch basins, manholes, inlets, structures, walks, other fixed objects, and where indicated.

1. Expansion material shall be placed at the appropriate elevation to achieve the depth of the sealant indicated on the Drawings. The top of the finished sealant shall be between 1/8” and 1/4” below the finished surface.
2. Locate expansion joints at intervals as indicated on drawings, unless otherwise indicated.
3. Extend joint fillers full width and depth of joint.
4. Terminate joint filler, as indicated on drawings, below finished surface if joint sealant is indicated.
5. Place top of joint filler flush with finished concrete surface if joint sealant is not indicated.
6. Furnish joint fillers in one-piece lengths. Where more than one length is required, lace or clip joint-filler sections together.
7. Protect top edge of joint filler during concrete placement with metal, plastic, or other temporary preformed cap. Remove protective cap after concrete has been placed on both sides of joint.

D. Contraction Joints or Scorelines: Form weakened-plane contraction joints, sectioning concrete into areas as indicated. Construct contraction joints for a depth equal to at least one-fourth of the concrete thickness, as follows as indicated in the Drawings.

1. Sawed Joints: Form contraction joints with power saws equipped with shatter-proof abrasive or diamond-rimmed blades. Cut 1/8-inch- wide joints into concrete when cutting action will not tear, abrade, or otherwise damage surface and before developing random contraction cracks.
2. Provide machine-sawn Contraction joints as soon as concrete has sufficient strength to support sawing equipment.
3. Joints shall meet the size and depth indicated on the drawings. Joints shall be true to lines and shapes shown on the Drawings and not vary from true. Grooves

shall be smooth and uniform.

4. The completed groove at the finished surface shall not vary more than 1/32” of the width indicated.

E. Edging: Tool edges of pavement, gutters, curbs, and joints in concrete after initial floating with an edging tool to a 1/4-inch radius. Repeat tooling of edges after applying surface finishes. Eliminate tool marks on concrete surfaces.

3.6 CONCRETE PLACEMENT

A. Inspection: Before placing concrete, inspect and complete formwork installation, reinforcement steel, and items to be embedded or cast in. Notify other trades to permit installation of their work.

B. Moisten subbase to provide a uniform dampened condition at time concrete is placed. Do not place concrete around manholes or other structures until they are at required finish elevation and alignment.

C. Comply with ACI 301 requirements for measuring, mixing, transporting, and placing concrete.

D. Do not add water to concrete during delivery or at Project site.

E. Do not add water to fresh concrete after testing.

F. Deposit and spread concrete in a continuous operation between transverse joints. Do not push or drag concrete into place or use vibrators to move concrete into place.

G. Consolidate concrete according to ACI 301 by mechanical vibrating equipment supplemented by hand spading, rodding, or tamping.

1. Consolidate concrete along face of forms and adjacent to transverse joints with an internal vibrator. Keep vibrator away from joint assemblies, reinforcement, or side forms. Use only square-faced shovels for hand spreading and consolidation. Consolidate with care to prevent dislocating reinforcement, dowels, and joint devices.

H. Screed pavement surfaces with a straightedge and strike off.

I. Commence initial floating using bull floats or darbies to impart an open textured and uniform surface plane before excess moisture or bleed water appears on the surface. Do not further disturb concrete surfaces before beginning finishing operations or spreading surface treatments.

J. When adjoining pavement lanes are placed in separate pours, do not operate equipment on concrete until pavement has attained 85 percent of its 28-day compressive strength.

K. Cold-Weather Placement: Comply with ACI 306.1 and as follows. Protect concrete work

from physical damage or reduced strength that could be caused by low temperatures.

1. When air temperature has fallen to or is expected to fall below 40 deg F, uniformly heat water and aggregates before mixing to obtain a concrete mixture temperature of not less than 50 deg F and not more than 80 deg F at point of placement.

L. Hot-Weather Placement: Comply with ACI 301 and as follows when hot-weather conditions exist:

1. Cool ingredients before mixing to maintain concrete temperature at time of placement below 90 deg F. Chilled mixing water or chopped ice may be used to control temperature, provided water equivalent of ice is calculated to total amount of mixing water. Using liquid nitrogen to cool concrete is Contractor's option.
2. Cover reinforcement steel with water-soaked burlap so steel temperature will not exceed ambient air temperature immediately before embedding in concrete.
3. Fog spray forms, reinforcement steel, and subgrade just before placing concrete. Keep subgrade moisture uniform without standing water, soft spots, or dry areas.

M. At the end of a work day, or when more than two hours may elapse between concrete pours, installation shall terminate at an expansion joint or other transition as shown on the Drawings.

N. Removal of Forms: The supporting forms shall not be disturbed until the concrete has hardened sufficiently to permit their removal with safety.

3.7 CONCRETE FINISHING

A. General: Paving finishes to match approved mock-up finishes.

3.8 WASH SAND FINISH:

A. After placing concrete, tamp with heavy grille tamper until at least 3/8" of mortar has been brought to the surface, as soon as the surface becomes workable, push down coarse aggregate, filling each hole and leveling surface to a true and even surface

B. Finish paving to match approved mock-up and have a uniform color and texture over the entire area.

C. Surfaces shall be free of ruts, grooves, dimples.

D. Edges shall be crisp and true to lines, and have finishes consistent with the field area. Float surfaces to required surfaces and planes. Finish to etch surface so that fines are exposed (no aggregate exposed.)

E. Ensure that paving surfaces receiving the finish are hand-troweled before final concrete set.

F. Match approved paving sample. It is recommended that a 2-foot x 2-foot test sample be poured from the same field mix and finished as same for each finish specified.

G. Sand Wash Finishes:

1. Light:

a. Light finish paving to match approved mock-up.

b. Thoroughly clean field pour and allow to dry.

c. Check for “hard spots”.

2. Heavy:

a. Follow steps as outlined above for a light finish.

3.9 EXPOSED AGGREGATE:

A. After placing concrete, tamp with heavy grille tamper until at least 3/8" of mortar has been brought to the surface, as soon as the surface becomes workable, push down coarse aggregate, filling each hole and leveling surface to a true and even surface

B. Exposed aggregate finish paving to match approved mock-up and have a uniform color and texture over the entire area.

C. Surfaces shall be free of ruts, grooves, dimples.

D. Edges shall be crisp and true to lines, and have finishes consistent with the field area. Float surfaces to required surfaces and planes. Finish to etch surface so that fines are exposed (no aggregate exposed.)

E. Immediately after concrete has been screeded and darbied, apply specified surface aggregate (if specified in the Drawings), evenly over entire surface, allowing no voids in coverage.

F. After seeding aggregate (if specified in the Drawings), embed the aggregate by hand-floating, so that top of aggregate is just below the surface.

G. As soon as the concrete has achieved a firm set, begin simultaneously brushing and hosting the surface with water so as to achieve a clean, uniform surface with no aggregate exposed more than 1/8-inch.

H. Do not dislodge or unevenly expose the surface so as to take on a “bald” spot appearance. Doing so may lead to paving rejection.

3.10 FLOAT FINISHING

A. General: Do not add water to concrete surfaces during finishing operations.

B. Edge forms and intermediate screed strips shall be set accurately to produce the elevations and contours in the finished surface.

C. After placing concrete, tamp with heavy grille tamper until at least 3/8" of mortar has been brought to the surface, as soon as the surface becomes workable, push down coarse aggregate, filling each hole and leveling surface to a true and even surface.

3.11 SANDBLAST FINISHES:

A. Finishes shall match the approved mock-up panels, and have a uniform color and texture over the entire area. Surfaces shall be free of ruts, grooves, dimples, or swirl marks resulting from the sandblast operations. Edges shall be crisp and true to lines, and have finishes consistent with the field.

B. Sandblast finish paving to match approved mock-up.

C. Perform sandblasting in as continuous an operation as possible, utilizing same work crew to maintain finish continuity.

D. Provide sandblasting to a finish as indicated on Drawings.

E. Depth of Etch: Use an abrasive sand of the required gradation and grit to expose paving surface to achieve specified etch:

1. Light Sand Blast: Approximately 1/32 to 3/32-inches deep.

2. Medium Sand Blast: Approximately 1/16 to 1/8-inches deep.

3. Heavy Sand Blast: Approximately 3/32 to 5/32-inches deep.

F. Carefully blast corners and edges of paving using appropriate backup boards, in order to maintain a uniform corner or edge finish as well as prevent blast damage to adjacent surfaces and landscaping.

G. Use same nozzle, nozzle pressure and blasting technique as used to prepare initial paving mock-ups. Exercise care to provide even and consistent strokes with air nozzle to minimize pockmarking of paving surface.

H. Cleanup and remove expended sand particles, concrete dust, loose aggregate, and other work-related debris at end of each day's blasting operations.

3.12 SEEDED WASHED AGGREGATE FINISH:

A. Finished surface shall match the approved mock-up panel in color and texture. Surfaces shall be free of ruts, grooves, dimples and have a uniform distribution of exposed coarse and fine aggregate over the entire surface area. Edges shall be crisp and true to lines, and have a finish consistent with the field area.

3.13 BROOM

A. After final floating, apply a hand-trowel finish followed by a broom finish to concrete.

B. Medium-to-Fine-Textured Broom Finish:

1. Draw a soft bristle broom across float-finished concrete surface, perpendicular to line of traffic, to provide a uniform, fine-line texture.

C. Medium-to-Coarse-Textured Broom Finish:

1. Provide a coarse finish by striating float-finished concrete surface 1/16 to 1/8 inch deep with a stiff-bristled broom, perpendicular to line of traffic.

3.14 QUARRY STONE FINISHES:

A. Finished surface shall match the approved mock-up panel in color and texture. Surfaces shall be free of ruts, grooves, dimples and have a uniform distribution of exposed coarse and fine aggregate over the entire surface area. Edges shall be crisp and true to lines, and have a finish consistent with the field area.

1. Light:

a. Light Quarry Stone finish paving to match approved mock-up.

2. Medium:

a. Medium Quarry Stone finish paving to match approved mock-up.

3. Heavy:

a. Heavy Quarry Stone finish paving to match approved mock-up.

3.15 CONCRETE PROTECTION AND CURING

A. Protect freshly placed concrete from premature drying and excessive cold or hot temperatures. Comply with the recommendations of ACI 305R for hot weather and ACI 306R for cold weather protection during curing.

B. Evaporation Control: In hot, dry, and windy weather, protect concrete from rapid moisture loss before and during finishing operations with an evaporation-control material. Apply according to manufacturer's instructions after screeding and bull floating, but before floating.

C. Begin curing after finishing concrete but not before free water has disappeared from concrete surface.

D. Curing Methods: Cure concrete by moisture curing, moisture retaining cover, curing compound, or combination of following:

1. Moisture Curing: Keep surfaces continuously moist for not less than 7 days with following materials:

a. Water.

b. Continuous water fog spray.

c. Absorptive cover, water saturated, kept continuously wet.

2. Cover concrete surfaces and edges with a 12-inch lap over adjacent absorptive covers.

3. Curing Compound:

a. Apply uniformly in continuous operation by power spray or roller according to manufacturer's directions.

b. Recoat areas subjected to heavy rainfall within three hours of initial application.

c. Maintain continuity of coating and repair damage during curing period.

E. General: Protect freshly placed concrete from premature drying and excessive cold or hot temperatures.

F. Comply with ACI 306.1 for cold-weather protection.

G. Protection and Curing: Provide and apply a sheet curing material that conforms to ASTM C 171, Standard Specifications for Sheet Material Curing Concrete. Protect concrete from defacement. Defaced concrete shall be replaced between expansion joints at no additional expense to the ~~Owner~~City.

H. Evaporation Retarder: Apply evaporation retarder to concrete surfaces if hot, dry, or windy conditions cause moisture loss approaching 0.2 lb/sq. ft. x h before and during finishing operations. Apply according to manufacturer's written instructions after placing, screeding, and bull floating or darbying concrete but before float finishing.

I. Begin curing after finishing concrete but not before free water has disappeared from concrete surface.

J. Curing Compound: Apply curing compound immediately after final finishing. Apply uniformly in continuous operation by power spray or roller according to manufacturer's written instructions. Recoat areas that have been subjected to heavy rainfall within three hours after application. Maintain continuity of coating and repair damage during curing period.

1. Cure integrally colored concrete with a pigmented curing compound.

2. Cure concrete finished with pigmented mineral dry-shake hardener with a pigmented curing compound.

K. Sealers: Prepare the finished surface and apply the penetrating sealer as recommended by the manufacturer.

L. Curing and Sealing Compound: Apply uniformly in continuous operation by power spray or roller according to manufacturer's written instructions. Recoat areas subjected to heavy rainfall within three hours after initial application. Repeat process 24 hours later and apply a second coat. Maintain continuity of coating and repair damage during curing

period.

M. Curing Paper: Cure with unwrinkled curing paper in pieces large enough to cover the entire width and edges of slab. Do not lap sheets. Fold curing paper down over pavement edges and secure with continuous banks of earth to prevent displacement or billowing due to wind. Immediately repair holes or tears in paper.

3.16 SEALER

A. Sealer: Apply uniformly in two coats in continuous operations according to manufacturer's written instructions. Allow first coat to dry before applying second coat, at 90-degrees to the direction of the first coat using same application methods and rates.

1. Begin sealing dry surface no sooner than 14 days after concrete placement or per the manufacturer’s recommendations.

2. Allow stained concrete surfaces to dry before applying sealer.

B. Mix slip-resistant additive thoroughly in sealer before application according to manufacturer's written instructions. Stir sealer occasionally during application to joint sealant.

C. Prior to applying the sealant, the joints shall be cleaned of all mortar, laitance, scale, dirt, dust, oil, curing compound, and other foreign materials. The joints and adjacent surfaces shall be dry and where called for by the manufacturer, prepared with a primer. The joints shall be filled from bottom to top without voids. Adjoining surfaces shall be protected during the sealing operations and stains, marks, or damage resulting from the sealant operations shall be corrected.

3.17 PAVEMENT TOLERANCES

A. Comply with tolerances of ACI 117 and as follows:

1. Elevation: 1/4 inch.
2. Thickness: Plus 3/8 inch, minus 1/4 inch.
3. Surface: Gap below 10-foot- long, unleveled straightedge not to exceed 1/4 inch.
4. Lateral Alignment and Spacing of Dowels: 1 inch.
5. Vertical Alignment of Dowels: 1/4 inch.
6. Alignment of Dowel-Bar End Relative to Line Perpendicular to Pavement Edge: Length of dowel 1/4 inch per 12 inches.
7. Joint Spacing: 3 inches.
8. Contraction Joint Depth: Plus 1/4 inch, no minus.
9. Joint Width: Plus 1/8 inch, no minus.

3.18 FIELD QUALITY CONTROL

A. Testing Agency: Engage a qualified independent testing and inspecting agency to perform field tests and inspections and prepare test reports.

B. Testing Services: Testing of composite samples of fresh concrete obtained according to ASTM C 172 shall be performed according to the following requirements:

C. Testing Frequency: Obtain at least 1 composite sample for each 5000 sq. ft. or fraction thereof of each concrete mix placed each day.

1. When frequency of testing will provide fewer than five compressive-strength tests for each concrete mixture, testing shall be conducted from at least five randomly selected batches or from each batch if fewer than five are used.

D. Slump: ASTM C 143/C 143M; one test at point of placement for each composite sample, but not less than one test for each day's pour of each concrete mix. Perform additional tests when concrete consistency appears to change.

E. Air Content: ASTM C 231, pressure method; one test for each composite sample, but not less than one test for each day's pour of each concrete mix.

F. Concrete Temperature: ASTM C 1064/C 1064M; 1 test hourly when air temperature is 40 deg F and below and when 80 deg F and above, and 1 test for each composite sample.

G. Compression Test Specimens: ASTM C 31/C 31M; cast and laboratory cure one set of three standard cylinder specimens for each composite sample.

H. Compressive-Strength Tests: ASTM C 39/C 39M; test 1 specimen at 7 days for information and 2 specimens at 28 days.

1. A compressive-strength test shall be the average compressive strength from 2 specimens obtained from same composite sample and tested at 28 days.

I. Strength of each concrete mix will be satisfactory if every average of three consecutive compressive-strength tests equals or exceeds specified compressive strength and no compressive-strength test value falls below specified compressive strength by more than 500 psi.

J. Test results shall be reported in writing to Design Consultant, concrete manufacturer, and Contractor within 48 hours of testing. Reports of compressive-strength tests shall contain Project identification name and number, date of concrete placement, name of concrete testing and inspecting agency, location of concrete batch in Work, design compressive strength at 28 days, concrete mixture proportions and materials, compressive breaking strength, and type of break for both 7- and 28-day tests.

K. Nondestructive Testing: Impact hammer, sonoscope, or other nondestructive device may be permitted by Design Consultant but will not be used as sole basis for approval or rejection of concrete.

L. Additional Tests: Testing and inspecting agency shall make additional tests of concrete when test results indicate that slump, air entrainment, compressive strengths, or other requirements have not been met, as directed by Design Consultant.

M. Remove and replace decorative cement concrete pavement where test results indicate that it does not comply with specified requirements.

N. Additional testing and inspecting, at Contractor's expense, will be performed to determine compliance of replaced or additional work with specified requirements.

3.19 REPAIRS AND PROTECTION

A. Remove and replace decorative cement concrete pavement that is broken, damaged, or does not comply with requirements in this Section in complete sections from joint to joint, unless otherwise approved by Design Consultant.

B. Detailing: Grind concrete "squeeze" left from tool placement. Color ground areas with slurry of color hardener mixed with water and bonding agent. Remove excess release agent with high-velocity blower.

C. Protect concrete from damage. Exclude traffic from pavement for at least 14 days after placement. When construction traffic is permitted, maintain pavement as clean as possible by removing surface stains and spillage of materials as they occur.

D. Maintain decorative cement concrete pavement free of stains, discoloration, dirt, and other foreign material. Sweep decorative cement concrete pavement not more than two days before date scheduled for Substantial Completion inspections.

END OF SECTION

SECTION 32 13 17 - LITHOCRETE© ARCHITECTURAL CONCRETE PAVING

PART 1 - GENERAL

1.1 SUMMARY

A. Drawings and general provisions of the Contract, including General and Supplementary Conditions and Division 01 Specification Sections, apply to this Section.

B. Include services, labor, materials, transportation, tools and equipment necessary to perform the work indicated on the Drawings and specified herein as required to properly complete the work in this contract.

C. Related Sections:

1. Section 01 10 10 - Sustainable Design Requirements.

2. Division 03 Section "Cast-In-Place Concrete" for formwork; material, fabrication, and installation requirements for steel reinforcement; and field quality control.

3. Division 03 Section "Landscape Architectural Concrete" for formwork; material, fabrication, and installation requirements for steel reinforcement; and field quality control.

4. Division 05 Section “Pipe and Tube Railings” for fabrication and installation requirements for pipe and tube railings.

5. Division 31 Section "Site Clearing" for removal limits of trees, shrubs, and other plantings affected by new construction.

6. Division 31 Section "Earth Moving" for building and utility trench excavation, backfilling, compacting and grading requirements, and soil materials.

7. Division 32 Section "Concrete Paving Joint Sealants" for joint sealants in contraction and other joints in cast-in-place Landscape Architectural concrete.

8. Division 32 Section “Plants” and “Turf and Grasses” for coordination with adjacent planting areas.

9. Division 32 Section “Planting Irrigation” for coordination with adjacent irrigation systems.

10. Division 32 Section "Pavement Joint Sealants" for joint sealants within decorative cement concrete pavement and at isolation joints of decorative cement concrete pavement with adjacent construction.

11. Division 32 Section “Decorative Concrete Paving”

12. Section 01 81 13, “SUSTAINABLE DESIGN REQUIREMENTS”: LEED Requirements.

D. Work included in this Section:

1. Installation of sand subbase

2. Installation of formwork, jointing and reinforcing.

3. Installation of Lithocrete architectural concrete installed under U.S. Patents #4,748,788 and #6,016,635 per Shaw and Sons (949) 642-0660. Contact Paul Taylor.

1.2 REFERENCES AND STANDARDS

A. American Concrete Institute (ACI) - 2001 Edition.

B. American Society of Testing Materials (ASTM).

C. Lithocrete Personnel Training Manual, latest revision February 1998.

D. Portland Cement Association - "Design and Control of Concrete Mixtures", 13th Edition.

E. Concrete Reinforcing Steel Institute's recommended practice "Placing Reinforcing Bars" for placing and supporting reinforcement.

F. US Green Building Council (USGBC), www.usgbc.org

1.3 QUALITY ASSURANCE

A. Finish Samples: Finish samples for finished are in City possession and are available for inspection. Finish samples shall remain as City property.

1. Prior to paving installation, provide one 4-foot x 4-foot x 4-inch mock-up of each Lithocrete paving type specified on Drawings, based on finish samples.

2. Ensure that at least one of the mock-ups contain each joint type indicated on Drawings, i.e. construction, contraction, and isolation. Install caulking if specified on Drawings.

3. Approved mock-ups will be standard for future paving review and approval.

4. Remove mock-ups from site upon completion of Work.

B. Testing:

1. Testing Agency: ~~Owner's Authorized Representative~~Design Consultant may designate a qualified testing agency. Testing personnel to meet ASTM E329 requirements.

2. Analyses: Samples of materials may be taken and analyzed for conformity to this Section. Furnish samples to ~~Owner's Authorized Representative~~design Consultant as requested.

3. Cost of Testing: Contractor shall pay costs associated with testing of materials not conforming to this Section.

C. Requirements of Regulatory Agencies: Federal, State and local laws and regulations governing this Work are hereby incorporated into and made part of this Section. When this Section calls for certain materials, workmanship, or a level of construction that exceeds the level of Federal, State or local requirements, provisions of this Section take precedence.

D. Inspections and Permits: Provide for inspections and permits required by Federal, State and Local authorities in furnishing, transporting, and installing materials.

E. Allowable Tolerances:

1. Concrete to be installed true to line and grade and as indicated on Drawings. Ensure that finish surface of concrete paving does not vary more than 1/4-inch per foot except at grade breaks. No "birdbaths" or other surface irregularities will be permitted. Correct identified irregularities to the satisfaction of the Design Consultant~~Owner's Authorized Representative~~.

2. Exercise car in placing, forming and doweling, lacing reinforcing, mixing and placing concrete to obtain smooth and even surfaces.

3. Be responsible for providing proper drainage with out "birdbaths" on paving surfaces. Discrepancies or omissions on Drawings, or on-site conditions, which prevent proper drainage, should be brought to ~~Owner's Authorized Representative's~~ Design Consultant's attention for direction prior to beginning work.

F. ~~Paving Subcontractor~~Contractor's Qualifications: Provide evidence to indicate successful experience in providing Lithocrete concrete paving similar to that specified herein and demonstrate successful experience through past project documentation and references.

1. Licensed Experience: Minimum 3 years experience as a licensed Lithocrete installer with combined installation of not less than 200,000 of Lithocrete paving.

2. Demonstration of Experience : Provide a minimum of three local projects within a 100 mile radius of project site installed with Lithocrete architectural concrete paving, complete with reference list containing following contact people and current telephone numbers:
   1) Owner.
   2) Architect
   3) Design Consultant
   4) Property Maintenance Company

3. Supervision: Perform placement and finishing of concrete work under supervision of a person having a minimum of 3 years experience in placement and finishing of products specified herein.

4. Submit qualification to Design Consultant ~~Owner's Authorized Representative~~ for information purposes. Submit a resume of Project Manager and Superintendent who will be overseeing the Work.

G. Ready-Mix Concrete Batch Plant Qualifications: Manufacturer of ready-mixed concrete products complying with ASTM C 94 requirements for production facilities and equipment.

H. Slip Resistance: Provide a finish surface slip resistance coefficient of friction equal or greater than finish samples (test results available).

I. Material selection: Select materials that have the highest possible recycled content while still meeting performance criteria. Select materials from local manufacturers wherever possible.

1.4 SUBMITTALS

A. Product Data: Submit no later than 10 days after contract award, one booklet containing a list of products specified in this Section. Include product "cut sheets" used under this Section to include but not be limited to the following - integral color, plastic dowel sleeves, curing agents, and sealer.

B. Certificates:

1. Provide certified mill test reports as to chemical and physical properties of reinforcing bars furnished.

a. Provide submittals to document material selection as follows:

b. Complete Materials Cost Tracking Sheet.

c. Data from manufacturer to certify recycled content, manufacture location and harvest location (i.e. cut sheets and/or manufacturer certification letters).

2. Provide submittals to document material selection:

a. Complete Materials Cost Tracking Sheet for concrete.

b. Data from manufacturer/batch plant to certify fly ash content in concrete mix.

C. Statement of Mix Design: Submit one copy to the Statement of Mix Design prepared by batch plant servicing Project for each concrete type delivered to Project. Statement of Mix Design to contain following information:

1. Name, address, and telephone number of batch plant preparing statement of mix design.

2. Date of Mix Design.

3. Project location.

4. Contractor requesting load delivery.

5. Mix Design Number.

6. Integral color used.

7. Gradations for sand and aggregate.

8. Material weights, specific gravity, and absolute volumes.

9. Basis of testing, i.e. UBC 2605 D4 and Title 24 2604 D4.

10. Water /cement ratio.

11. Admixtures.

12. PSI rating at 28 days.

13. Signature of testing laboratory manager.

14. Signed stamp from registered Project structural engineer or architect.

15. Include the highest percentage of fly ash in concrete mix that will meet the specified performance criteria.

D. Extra Stock:

1. Provide one 50-pound sealed bag of each Lithocrete aggregate installed for future repair work.

E. Submittals shall be in accordance with section 01330.

F. LEED certification product data as specified in Division 1, Section 01 81 13, "SUSTAINABLE DESIGN REQUIREMENTS", for the following LEED credits:

1. Credit MR 4.1 & 4.2, Recycled Content

2. Credit MR 5.1 & 5.2, Regional Materials, Manufactured & Harvested / Extracted Locally

1.5 DELIVERY, STORAGE AND HANDLING

A. Store materials in a dry and protected location. Protect reinforcing steel and dowels from rusting, staining and moisture damage.

B. Keep Lithocrete aggregates clean and dry prior to installation.

1.6 PROJECT CONDITIONS

A. Ensure that substrate conditions set to receive concrete paving are acceptable before beginning work. Do not begin work until unsatisfactory conditions have been resolved to Design Consultant and Contractor's satisfaction.

B. Sequencing and Scheduling of Work:

1. Other Trades Work:

a. Coordinate with other trades items that need to be furnished and set in place prior to beginning work. Portions of other trades work to be executed by them so as not to delay progress of ~~Paving Subcontractors~~Contractor's work.

b. Be responsible for proper installation of accessories embedded in concrete for provision of holes, vaults, and openings, necessary to execution of other trades work.

c. After wood forms have been placed and approved by Design Consultant, ensure that other trades have been notified and given sufficient times to complete their portion of work.

C. Do not place concrete when subbase temperature is less than 40 degrees F, nor when surface is wet.

1.7 COORDINATION

A. Ensure that utility and irrigation sleeves, utility covers, and other surface elements are accommodated and locations approved by Design Consultant prior to installing concrete paving.

1.8 SUBSTITUTIONS

A. No other alternative paving finishes to Lithocrete will be allowed which include but are not limited to:

1. Monolithic Concrete Paving Finishes:

a. Exposed surface-seeded glass aggregate by means of washing or brushing ("sand finish").

1.9 INSPECTION OF SITE

A. Verify conditions at site that affect Work of this Section, and take field measurements as required. Report major discrepancies between Drawings and field dimensions to Design Consultant ~~Owner's Authorized Representative~~ prior to commencing work.

1.10 PROTECTION OF LITHOCRETE CONCRETE PAVING

A. Do not permit trade equipment or vehicular traffic on finished Lithocrete paving for the duration of the project; to include but not to be limited to the following - manlifts, forklifts, skip loaders, Bobcats, generators, welders, backhoes, rolling scaffolding, pallet jacks, and scissor lifts.

B. Do not permit pedestrian traffic on finished concrete paving within 14 days of pour.

C. Contractor Work Access Pathways: General Contractor to provide 1/2 inch thick plywood pathways (minimum 8-feet wide) connected with Tico panel clips and 3/8" screws. Plywood to rest on 1/4" polyform sheeting or virgin milled (unstained) carpeting for protection pathways.

D. General Contractor to be responsible for damage and related repair efforts resulting from trade damage to installed finished concrete paving.

1.11 WARRANTY

A. In addition to manufacturer's guarantees for products installed in conjunction with this section, concrete work will be warranted for one year from date of Final Acceptance by ~~Owner~~ the City against defects in materials, workmanship, and damage caused by ~~Paving Subcontractor's~~Contractor's employees.

B. ~~Paving Subcontractor will not be held responsible for failure caused to install Lithocrete concrete paving due to neglect or damage caused by General Contractor, Project subcontractors, vandalism, or Acts of God during stated paving warranty period.~~

PART 2 - PRODUCTS

2.1 FORMS

A. Form work to be new, #2 grade Douglas Fir, free of knots, checks, bows and cracks.

B. "Keykold" joint per Drawings.

2.2 READY MIX CONCRETE

A. Batched, mixed and transported in accordance with ASTM C94 - "Specifications for Ready Mixed Concrete".

2.3 PORTLAND CEMENT

A. Refer to Drawings for specific paving finishes requiring different cement types, to include Type I, II, III, or II/V cements conforming to ASTM C150.

B. Use same brand of cement from single source throughout entire project for each paving type.

C. Refer to Statement of Mix Design for cement type used.

2.4 FINE AGGREGATE

A. Clean, hard, and durable washed concrete sand, conforming to ASTM C33.

B. Use same fine aggregate from single source throughout entire project.

C. Refer to Statement of Mix Design for fine aggregate type used.

2.5 COARSE AGGREGATE

A. Clean, hard, and durable coarse aggregate, conforming to ASTM C33.

B. Use same fine aggregate from single source throughout entire project.

C. Refer to Statement of Mix Design for fine aggregate type used.

2.6 WATER

A. Free from deleterious materials such as oils, acids, and organic matter.

2.7 LITHOCRETE AGGREGATE

A. Refer to Drawings for specified Lithocrete glass aggregate type, size, color and distribution percentage.

B. Use same Lithocrete glass aggregate from same source for each paving type specified throughout entire project.

C. Keep Lithocrete glass aggregates clean and dry prior to broadcasting.

2.8 ADMIXTURES

A. Integral Coloring Admixture (dry pigment): Refer to Drawings for color type and manufacturer.

1. Acceptable Manufacturer: L.M. Scofield; (800) 800-9900.

B. Set Retarders: Conforming to ASTM C494, Type B and D.

1. Acceptable Manufacturers:

a. Grace Construction Products; Daratard 17 Set Retarder (800) 433-0020

b. Master Builders, Inc.; Pozzolith Retarder, (800) 628-9990

C. Shrinkage Reducing Admixtures: Conforming to ASTM C157.

1. Acceptable Manufacturers:

a. Grace Construction Products; Eclipse, (800) 433-0020

D. Air Enhancement Admixtures: Conforming to ASTM C260.

1. Acceptable Manufacturers:

a. Grace Construction Products; Daravair, (800) 433-0020

b. Master Builders, Inc.; Micro-Air, (800) 628-9990

E. Water Reducing Admixtures: Conforming to ASTM C494, Type A.

1. Acceptable Manufacturers:

a. Grace Construction Products; WRDA, (800) 433-0020

b. Master Builders, Inc.; Micro-Air, (800) 628-9990

F. Fly Ash: Conforming to ASTM C 618 - Type F. To be used only in Lithocrete aggregate paving finishes. Combined weight of fly ash conforming to ASTM C618 to not exceed 25% of total weight of cementious materials.

2.9 REINFORCING

A. Reinforcing Steel: Conforming to ASTM A615, clean and free of rust, dirt, grease or oils.

B. Tie Wire: 16 1/2 gauge annealed steel wire conforming to ASTM A82, clean, and free of rust, dirt, grease, and oils.

C. Supports for Reinforcement:

1. Provide supports for reinforcement including bolsters, chairs, spacers and other devices for spacing, supporting and fastening reinforcing bars in place.

D. Polypropylene Fiber Reinforcement: 100% virgin multifilament polypropylene fibers, complying with ASTM C1116 - Type III.

1. Acceptable Manufacturers:

a. Fibermesh; Fibermix Stealth - 1/4" long (423) 892-8080

b. Grace Construction Products; MicroFiber, (800) 433-0020

2. Application Rate: 1/2 lb./cy of mix.

2.10 JOINT MATERIALS

A. Construction Joints:

1. Steel Dowels: 1/2-inch-diameter smooth steel bars, free of dirt, grease, and oils.

2. Plastic Dowel Sleeves: Encase 50 percent of each dowel in a Speed Dowel plastic sleeve to allow parallel lateral movement of each dowel. Greenstreak, (800) 325-9504.

B. Isolation Joints:

1. See Drawings

C. Other Joints:

1. Refer to Section 02520

2.11 CURING MATERIALS

A. Absorptive Cover. Burlap cloth made from jute or kenaf, weighing approximately 9 oz. per sq. yd., complying with AASHTO M 182, Class 2.

B. Moisture Retaining Cover: One of the following complying with ASTM C 171:

1. Water proof paper

2. Polyethylene film.

3. White Burlap-polyethylene sheeting.

C. Clear, Waterborne Membrane-Forming Curing Compounds:

1. Provide curing materials that have a maximum volatile organic compound (VOC) rating of 350 g/l.

D. Evaporation Control: Monomolecular film-forming compound applied to exposed concrete slab surfaces for temporary protection from rapid moisture loss.

1. Clear, Waterborne Membrane-Forming Curing Compounds Acceptable Manufacturers:

a. Anti-Hydor Company; Clear Cure Water Base.

b. The Burke Company; Spartan Cote WB.

c. Cormix Construction Chemicals; Sealco VOC.

2. Acceptable Evaporation Control Manufacturers:

a. Conspec Marketing and MFG, Company; Aquafilm.

b. Euclid Chemical Company; Eucobar.

c. L&M Construction Chemicals; E-Con.

PART 3 - EXECUTION

3.1 SUBGRADE PREPARATION

A. Subgrade to meet requirements of project's soils report.

B. Verify that paving subgrade consists of a minimum of 4-inches of compacted washed concrete sand, passes less than 7% through a #200 sieve, and is compacted to at least 95% of the materials ASTM D 1557 maximum dry density for it's full depth.

C. Verify that paving subgrade extends 1-foot beyond the outside edge of paving of curbing and has a positive outfall for trapped water.

D. Ensure that utilities, including irrigation lines are buried and compacted below bottom of sand subbase.

E. Screed sand to a smooth and level plane.

F. Proof-roll prepared sand subbase to check for unstable areas and verify need for additional compaction. Do not begin paving work until such conditions have been corrected and are ready to receive concrete paving.

G. Remove loose material from compacted sand base prior to placing concrete.

H. Provide necessary chairs or supports, and maintain position of reinforcing bars.

I. Dampen sand subbase prior to placing concrete, ensure that no standing water exists.

3.2 FORM WORK

A. Be responsible for design and engineering of formwork as well as it's construction.

B. Construct forms accurately to dimensions, plumb and true to line grade. Set formwork tight and braced so as to maintain position and shape during placement of reinforcing steel and concrete.

C. Carefully examine Drawings and provide necessary recesses and openings of proper sizes and shapes. Secure anchor plates, inserts, and other items to be embedded in concrete accurately so that they will not be displaced during concrete placement.

D. Ensure that form lumbar is new #2 or better grade wood, free of splits, knotholes, and true to line both horizontally and vertically.

E. Set formwork where both horizontal and vertical planes are straight and plumb.

F. Construct forms in such a manner that construction joints occur at locations indicated on Drawings. Do not exceed 20-feet by 20-feet in formed construction area.

G. Observe formwork carefully and check for alignment and level as work proceeds. Perform adjustments and add additional staking, if necessary.

H. Obtain Design Consultant 's~~Owner's Authorized Representative's~~ approval of formwork before placing concrete.

I. Wets side of wood in contact with concrete prior to pour.

J. Allow formwork to remain in place long enough for concrete to set properly. Do not remove supporting forms until concrete has sufficient strength to support its own weight without deflection.

K. Remove forms when appropriate and discard offsite.

3.3 REINFORCEMENT

A. Place reinforcement as indicated on Drawings.

B. Clean reinforcement of loose rust and mill scale, earth, ice, and other bond-reducing materials.

C. Arrange space and securely tie bars and bar supports to hold reinforcement in position during concrete placement. Maintain minimum cover over reinforcement.

D. Wet to cool steel bars prior to placement of concrete.

3.4 DESIGN OF MIXES AND PROPORTIONING

A. Proportion and mix of cement, aggregate, admixture and water to attain required plasticity and strength in accordance with current edition of ACI Manual of Concrete Practice and PCA " Design and Control of Concrete Mixtures".

B. Concrete Mixtures to be designed by an approved commercial testing laboratory, using approved materials to obtain specified minimum compressive strength.

C. Concrete Mix Criteria:

1. Slump:

a. Maximum: 5-inches

b. Minimum: 3-inches

2. PSI Rating (minimums):

a. At 7 days: minimum of 3,000.

b. At 28 days; minimum of 4,500.

3. Cement:

a. Type: as noted on Drawings

b. Quantity per yard of mix :

1. Minimum: 6 1/2 sacks

2. Maximum: 7 sacks

4. Water / cement ratio: 0.62 -0.67

5. Fine aggregate (washed concrete sand): 70% of total

6. Coarse aggregate: 30% of total

7. Admixtures:

   a. Air entrainment: Do not exceed 2%.

   b. Shrinkage Reducing: Do not exceed 2% by weight of cement.

8. Fly Ash: Use only when seeding glass Lithocrete aggregates.

9. Accelerators: Do not use corrosive accelerators such as calcium chloride.

10. Concrete Delivery: Do not use concrete loads exceeding 90 minutes from the time of batching.

11. Ensure that batch plant guarantees single source supply for cement, fine aggregate, and coarse aggregate for entire length of project.

3.5 CONCRETE PLACEMENT

A. Inspection: Before placing concrete, inspect and complete formwork, installation of their steel, and items to be embedded or cast in. Notify other trades to facilitate installation of their work.

B. Moisten sand subbase to provide a uniform dampened condition at the time it is placed. Do not place concrete around manholes and other utility structures until they are at the required finish elevation and alignment.

C. Comply with requirements and with ACI 304R for measuring, transporting and placing concrete.

D. Deposit and spread concrete in a continuous operation between construction joints.

E. Consolidate concrete by mechanical vibrating equipment supplemented by hand spreading, rodding, or ramping. Use equipment and procedures to consolidate concrete complying with ACI 309R.

   1. Consolidate concrete along face of forms with an internal vibrator. Keep vibrator away from joint assemblies, reinforcement or side forms. Use only square faced shovels for hand spreading and consolidation. Prevent dislocating reinforcing and dowels.

F. Screed paved surfaces with a straight edge and strike off. Use bull floats to form a smooth surface plane before excess moisture or bleed appears on surface. Do not further disturb concrete surfaces prior to beginning finishing operations.

G. Hot weather Placement: Place concrete complying with ACI 305R when hot weather conditions exist.

   1. Cool ingredients before mixing to maintain concrete temperature at time of placement 90 degrees F and below. Mixing water may be chilled or chopped ice may be used to control temperature, provided water equivalent of ice is calculated to total amount of mixing water.

2. Cover reinforcing steel with water soaked burlap if it becomes too hot, so that steel temperature will not exceed the ambient air temperature immediately before embedding in concrete.

3. Fog Spray forms, reinforcing steel, and subgrade just before placing concrete. Keep subgrade moisture uniform without standing water, or soft dry areas.

3.6 LITHOCRETE AGGREGATE APPLICATION

A. Broadcasting of Lithocrete glass aggregates to be performed only through a licensed Lithocrete installer.

B. Lithocrete process of embedding surface-seeded aggregates incorporates, but is not limited to the following propriety products:

1. Lithocrete conditioner

2. Lithocrete Etch-Retarder

3. Lithocrete paving surface sealer.

3.7 JOINTING

A. Refer to ACI 302 "guide for Concrete Floor and Slab Construction" for work under this section.

B. Contraction Joint:

1. Sawcut contraction and construction joints in locations as indicated on Drawings.

2. Perform jointing with a new diamond tip circular saw.

3. Joint Width: See Drawings.

4. Sawcut Depth: See Drawings

5. Sawcut joints in a straight line with no overcutting at intersections.

6. Use a hand grinder with 4 inch diamond blade to sawcut up to vertical edges such as walls, steps, curbs, and columns. Do not overcut into vertical surfaces.

C. Doweled Construction joints; Construct doweled construction joints where paving operations are stopped for more than 1/2 hour, end of day pours, and adjacent differing pavers finishes.

1. Steel Dowels:

a. Provide steel dowels across construction joints to reduce differential movement across the joint. Utilize steel dowels based upon the following:

1. 7-inch thick Pavement:

i. Diameter: 3/4inch

ii. Length: 18 inches

iii. On Center Spacing: per Drawings.

b. To assist in correct alignment of steel dowels along construction joints, use SpeedDowel plastic dowel alignment sleeves.

1. Ensure that wood edge forms are true to line and grade prior to installing plastic dowel alignment sleeves.

2. Install plastic dowel sleeves on wood forms at the specified on center dowel spacing, centered between top and bottom of wood form.

2. Do not continue tie reinforcement through sides of strip paving.

3. Use a bond-breaking agent on cured concrete edges that will be joined with fresh concrete.

4. Immediately before new concrete is placed, wet construction joint and remove standing water.

5. Tool edges of construction joint to match decorative field jointing.

6. Joint width: Per drawings.

7. Sawcut joints in a straight line with no overcutting.

8. Use a handgrinder with a 4 inch diamond blade to sawcut up to vertical edges such as walls, steps, curbs and columns. Do not over cut.

9. Do not continue reinforcement through adjacent concrete pour panels.

D. Isolation Joints:

Install isolation joints and caulking per drawings.

3.8 PROTECTION

A. Protect fresh placed concrete from premature drying and excessive cold or hot temp. Comply with the recommendations of ACI 305R for hot weather and ACI 306R for cold weather protection during curing.

B. Keep Pedestrians and vehicles off finished slabs as indicated under part 1 of this section.

3.9 CURING

A. Protect fresh placed concrete from premature drying and cold or hot temperatures. Comply with the recommendations of ACI 305R for hot and ACI 306R for cold, for protection during curing.

B. Begin curing after finishing concrete but not before free water has disappeared from concrete surface.

C. Curing Methods: Cure concrete by moisture curing, moisture retaining cover curing, curing compound, or a combination of the following:

1. Moisture Curing: Keep surfaces moist for not less than 7 days with:

   a. water

   b. Water fog spray

   c. Absorptive cover, water satirized always kept wet.

2. Cover concrete surfaces with a 12 inch lap over adjacent absorptive covers.

3. Curing Compound:

   a. Apply uniformly in continuous operation by power spray or roller according to Manufacturers instructions.

   b. Recoat areas subjected to heavy rainfall within 3 hours after initial application.

   c. Maintain continuity of coating and repair damage during curing periods.

3.10 DAMAGED CONCRETE

A. Remove and replace concrete paving that is broken, damaged, defective, or does not meet the requirements of this Section. Damaged paving to be replaced at ~~Paving Subcontractor~~Contractor's expense when damage is done by direct negligence of ~~Paving Subcontractor~~Contractor.

3.11 SEALING

A. After paving is cured, seal paving with a minimum of three light coats of "Lithoseal" paving sealer.

B. Follow Lithoseal paving sealer directions when applying this product.

C. Additional sealers to Lithoseal will not be allowed with out approval by Design Consultant ~~Owners Authorized Representative~~ and C~~Paving Subc~~ontractor.

3.12 CLEANUP

A. Keep work area clean, neat and orderly throughout the duration of the project.

B. Prior to Final Acceptance review by Design Consultant~~Owners Authorized Representative~~, cleanup and remove deleterious materials and debris from entire work area.

C. At completion of Work, remove concrete stains caused from ~~paving Subcontractor's~~Contractor's work on adjacent paving, walls, columns, railing posts, light fixtures, plant materials, to satisfaction of Design Consultant~~Owners Authorized Representative~~.

D. Dispose of site-generated waste in accordance with the accepted Contractor's Construction Waste Management Plan.

E. Comply with the Stormwater Pollution Prevention Plan developed for the Project.

F. Comply with the Erosion Control Plan for the Project.

END OF SECTION

SECTION 32 13 73 - CONCRETE PAVING JOINT SEALANTS

PART 1 - GENERAL

1.1 RELATED DOCUMENTS

A. Drawings and general provisions of the Contract, including General and Supplementary Conditions and Division 01 Specification Sections, apply to this Section.

1.2 SUMMARY

A. This Section includes the following:

1. Expansion and contraction joints within cement concrete pavement.

2. Joints between cement concrete and asphalt pavement.

B. Related Sections include the following:

1. Section 01 10 10 Sustainable Design Requirements

2. Division 32 Section "Decorative Concrete Paving" for constructing joints in concrete pavement.

3. Division 33 Section “Landscape Architectural Concrete” for constructing joints at concrete walls and other appurtenances.

4. Division 33 Section “Lithocrete Architectural Concrete Paving” for constructing joints in concrete paving

5. Section 01 81 13, “SUSTAINABLE DESIGN REQUIREMENTS”: LEED Requirements.

1.3 REFERENCES

A. US Green Building Council (USGBC), www.usgbc.org

1.4 SUBMITTALS

A. Comply with Section 13 33 00 Submittal Procedures and Section 01 10 10 - Sustainable Design Requirements.

B. Product Data: For each joint-sealant product indicated.

C. Samples for Verification: For each type and color of joint sealant required. Install joint-sealant samples in 1/2-inch- wide joints formed between two 6-inch- long strips of material matching the appearance of exposed surfaces adjacent to joint sealants.

D. Product Certificates: For each type of joint sealant and accessory, signed by product manufacturer.

E. Qualification Data: For ~~Installer~~Contrator.

F. Compatibility and Adhesion Test Reports: From sealant manufacturer, indicating the following:

1. Materials forming joint substrates and joint-sealant backings have been tested for compatibility and adhesion with joint sealants.

2. Interpretation of test results and written recommendations for primers and substrate preparation needed for adhesion.

G. Product Test Reports: Based on evaluation of comprehensive tests performed by a qualified testing agency, for sealants.

H. LEED certification product data as specified in Division 1, Section 01 81 13, “SUSTAINABLE DESIGN REQUIREMENTS”, for the following LEED credits:

1. Credit MR 4.1 & 4.2, Recycled Content

2. Credit MR 5.1 & 5.2, Regional Materials, Manufactured & Harvested / Extracted Locally

1.5 QUALITY ASSURANCE

A. ~~Installer~~ Contractor Qualifications: An employer of workers trained and approved by manufacturer.

B. Source Limitations: Obtain each type of joint sealant through one source from a single manufacturer.

C. Preconstruction Compatibility and Adhesion Testing: Submit to joint-sealant manufacturers, for testing indicated below, samples of materials that will contact or affect joint sealants.

1. Use ~~[~~ASTM C 1087~~]~~ to determine whether priming and other specific joint preparation techniques are required to obtain rapid, optimum adhesion of joint sealants to joint substrates.

2. Submit not fewer than ~~[~~eight~~]~~ pieces of each type of material, including joint substrates, shims, joint-sealant backings, secondary seals, and miscellaneous materials.

3. Schedule sufficient time for testing and analyzing results to prevent delaying the Work.

4. For materials failing tests, obtain joint-sealant manufacturer's written instructions for corrective measures including use of specially formulated primers.

5. Testing will not be required if joint-sealant manufacturers submit joint preparation data that are based on previous testing of current sealant products for adhesion to, and compatibility with, joint substrates and other materials matching those submitted.

D. Product Testing: Obtain test results for "Product Test Reports" Paragraph in "Submittals" Article from a qualified testing agency based on testing of current sealant products within a 36-month period preceding the [commencement of] the Work.

1. Testing Agency Qualifications: An independent testing agency qualified according to ASTM C 1021 for testing indicated, as documented according to ASTM E 548.

1.6 DELIVERY, STORAGE, AND HANDLING

A. Deliver materials to Project site in original unopened containers or bundles with labels indicating manufacturer, product name and designation, color, expiration date, pot life, curing time, and mixing instructions for multicomponent materials.

B. Store and handle materials to comply with manufacturer's written instructions to prevent their deterioration or damage due to moisture, high or low temperatures, contaminants, or other causes.

1.7 PROJECT CONDITIONS

A. Do not proceed with installation of joint sealants under the following conditions:

1. When ambient and substrate temperature conditions are outside limits permitted by joint-sealant manufacturer.

2. When ambient and substrate temperature conditions are outside limits permitted by joint-sealant manufacturer or are below 40 deg.

3. When joint substrates are wet or covered with frost.

4. Where joint widths are less than those allowed by joint-sealant manufacturer for applications indicated.

5. Where contaminants capable of interfering with adhesion have not yet been removed from joint substrates.

PART 2 - PRODUCTS

2.1 MANUFACTURERS

A. Available Products: Subject to compliance with requirements, products that may be incorporated into the Work include, but are not limited to, products listed in other Part 2 articles.

B. Products: Subject to compliance with requirements, provide one of the products listed in other Part 2 articles.

2.2 MATERIALS, GENERAL

A. Compatibility: Provide joint sealants, backing materials, and other related materials that are compatible with one another and with joint substrates under conditions of service and application, as demonstrated by joint-sealant manufacturer based on testing and field experience.

B. Colors of Exposed Joint Sealants: ~~[~~As selected by Design Consultant from manufacturer's full range~~]~~.

2.3 COLD-APPLIED JOINT SEALANTS

A. Single-Component Jet-Fuel-Resistant Urethane Sealant for Concrete: Single-component, pourable, coal-tar-modified, urethane formulation complying with ASTM C 920 for Type S; Grade P; Class 25; Uses T, M, and, as applicable to joint substrates indicated, O.

B. One part moisture curing polyurethane sealant designed for caulking applications of exterior horizontal joints. Self-leveling and compatible for uses with the expansion material.

1. Products:

a. Sonneborn, Div. of ChemRex, Inc.; Sonomeric 1.

b. Polytite

c. Tremco

2.4 JOINT-SEALANT BACKER MATERIALS

A. General: Provide joint-sealant backer materials that are nonstaining; are compatible with joint substrates, sealants, primers, and other joint fillers; and are approved for applications indicated by joint-sealant manufacturer based on field experience and laboratory testing.

B. Round Backer Rods for Cold- and Hot-Applied Sealants: ASTM D 5249, Type 1, of diameter and density required to control sealant depth and prevent bottom-side adhesion of sealant.

C. Backer Strips for Cold- and Hot-Applied Sealants: ASTM D 5249; Type 2; of thickness and width required to control sealant depth, prevent bottom-side adhesion of sealant, and fill remainder of joint opening under sealant.

D. Round Backer Rods for Cold-Applied Sealants: ASTM D 5249, Type 3, of diameter and density required to control sealant depth and prevent bottom-side adhesion of sealant.

2.5 PRIMERS

A. Primers: Product recommended by joint-sealant manufacturer where required for adhesion of sealant to joint substrates indicated, as determined from preconstruction joint-sealant-substrate tests and field tests.

PART 3 - EXECUTION

3.1 EXAMINATION

A. Examine joints indicated to receive joint sealants, with ~~Installer~~ Contractor present, for compliance with requirements for joint configuration, installation tolerances, and other conditions affecting joint-sealant performance.

1. Proceed with installation only after unsatisfactory conditions have been corrected.

3.2 PREPARATION

A. Surface Cleaning of Joints: Clean out joints immediately before installing joint sealants to comply with joint-sealant manufacturer's written instructions.

B. Joint Priming: Prime joint substrates where indicated or where recommended in writing by joint-sealant manufacturer, based on preconstruction joint-sealant-substrate tests or prior experience. Apply primer to comply with joint-sealant manufacturer's written instructions. Confine primers to areas of joint-sealant bond; do not allow spillage or migration onto adjoining surfaces.

3.3 INSTALLATION OF JOINT SEALANTS

A. General: Comply with joint-sealant manufacturer's written installation instructions for products and applications indicated, unless more stringent requirements apply.

B. Sealant Installation Standard: Comply with recommendations in ASTM C 1193 for use of joint sealants as applicable to materials, applications, and conditions indicated.

C. Install backer materials of type indicated to support sealants during application and at position required to produce cross-sectional shapes and depths of installed sealants relative to joint widths that allow optimum sealant movement capability.

1. Do not leave gaps between ends of backer materials.

2. Do not stretch, twist, puncture, or tear backer materials.

3. Remove absorbent backer materials that have become wet before sealant application and replace them with dry materials.

D. Install sealants using proven techniques that comply with the following and at the same time backings are installed:

1. Place sealants so they directly contact and fully wet joint substrates.

2. Completely fill recesses provided for each joint configuration.

3. Produce uniform, cross-sectional shapes and depths relative to joint widths that allow optimum sealant movement capability.

E. Tooling of Nonsag Sealants: Immediately after sealant application and before skinning or curing begins, tool sealants according to requirements specified below to form smooth, uniform beads of configuration indicated; to eliminate air pockets; and to ensure contact and adhesion of sealant with sides of joint.

1. Remove excess sealants from surfaces adjacent to joint.

2. Use tooling agents that are approved in writing by joint-sealant manufacturer and that do not discolor sealants or adjacent surfaces.

F. Provide joint configuration to comply with joint-sealant manufacturer's written instructions, unless otherwise indicated.

G. Provide recessed joint configuration for silicone sealants of recess depth and at locations indicated.

3.4 CLEANING

A. Clean off excess sealants or sealant smears adjacent to joints as the Work progresses by methods and with cleaning materials approved by manufacturers of joint sealants and of products in which joints occur.

3.5 PROTECTION

A. Protect joint sealants during and after curing period from contact with contaminating substances and from damage resulting from construction operations or other causes so sealants are without deterioration or damage at time of Substantial Completion. If, despite such protection, damage or deterioration occurs, cut out and remove damaged or deteriorated joint sealants immediately and replace with joint sealant so installations with repaired areas are indistinguishable from the original work.

END OF SECTION

SECTION 32 14 45 - POROUS PAVING

PART 1 - GENERAL

1.1 SUMMARY

A. The Work to be completed under this contract includes the furnishing of labor, materials and equipment necessary for construction of the proposed improvements in conformance with the plans and specifications.

A. Section includes:
1. Porous paving systems.
   a. Concrete.
2. Unit paver systems.
   a. Ceramic

B. Related Work Specified Elsewhere:

1. Section 01 10 10 - Sustainable Design Requirements.

2. List below only products and construction that the reader might expect to find in this Section but are specified elsewhere.

3. Division 03 Section "Cast-In-Place Concrete" for formwork; material, fabrication, and installation requirements for steel reinforcement; and field quality control.

4. Division 32 Section "Landscape Architectural Concrete Paving" for Landscape Architectural concrete pavement and flatwork finishes.

5. Division 05 Section "~~Pipe and Tube Railings~~Metal Fabrications" for fabrication and installation requirements for ~~pipe and tube railings~~handrails.

6. Division 31 Section "Site Clearing" for removal limits of trees, shrubs, and other plantings affected by new construction.

7. Division 31 Section "Earth Moving" for building and utility trench excavation, backfilling, compacting and grading requirements, and soil materials.

8. Division 32 Section "Concrete Paving Joint Sealants" for joint sealants in contraction and other joints in cast-in-place Landscape Architectural concrete.

9. Division 32 Section "Decorative Concrete Paving" for Landscape Architectural concrete pavement and flatwork finishes.

10. Division 32 Section "Lithocrete Architectural Concrete Paving" for Landscape Architectural concrete pavement and flatwork finishes.

11. Division 32 Section “Plants” and “Turf and Grasses” for coordination with adjacent planting areas.

12. Division 32 Section “Planting Irrigation” for coordination with adjacent irrigation systems.

13. Division 33 Section “Subdrainage” for drainage under permeable paving

14. Section 01 81 13, “SUSTAINABLE DESIGN REQUIREMENTS”: LEED Requirements.

1.2 REFERENCES AND STANDARDS

A. Conform to the following codes and standards:

B. American Society for Testing and Materials
1. ASTM C29 “Test for Unit Weight and Voids in Aggregate”
2. ASTM C33 “Specification for Concrete Aggregates”
3. ASTM C42 “Test Method for Obtaining and Testing Drilled Cores and Sawed Beams of Concrete.”
4. ASTM C117 “Test Method for Material Finer than 75 microns (No. 200) Sieve in Mineral Aggregates by Washing.”
5. ASTM C138 “Test Method for Unit Weight, Yield and Air Content (Gravimetric) of Concrete.”
6. ASTM C140 “Methods of Sampling and Testing Concrete Masonry Units.”
7. ASTM C150 “Specifications for Portland Cement” (Types I and II only)
8. ASTM C172 “Practice for Sampling Fresh Concrete”
9. ASTM C260 “Specification for Air-Entraining Admixtures for Concrete”
10. ASTM C494 “Specification for Chemical Admixtures for Concrete”
11. ASTM C595 “Specification for Blended Hydraulic Cements” (Types IP or IS only)
12. ASTM 989 “Specification for Ground Granulated Blast-Furnace Slag for Use in Concrete and Mortars.”
13. ASTM C1077 “Practice for Laboratories Testing Concrete and Concrete Aggregates for Use in Construction and criteria for Laboratory Evaluation.”
14. ASTM D448 “Specification for Standard Sizes of Coarse Aggregate for Highway Construction.”
15. ASTM D1557 “Tests for Moisture-Density Relations of Soils and Soil Aggregate Mixtures Using 10 Pound Rammer and 18-inch Drop.”

16. ASTM E329 “Standard Recommended Practice for Inspection and testing Agencies for Concrete, Steel and Bituminous Materials as Used in Construction.”

C. American Association of State Highway and Transportation Officials (AASHTO)

1. AASHTO T-180 “Moisture-Density Relations of Soils Using a 101 lb (45.4 kg) Rammer and an 18’’ (457 mm) Drop.”

D. Concrete installer to have 5 or more STF porous paving projects installed, totaling at least 100,000 square feet.

E. Provide a list of projects (5) with the address of the installation, the date of the installation, the point of contact for the project and their phone number.

F. Provide 2 photos of each project listed above representing the project/installation.

G. Concrete company to have been in business 10 years or more. Provide three references with phone numbers.

H. US Green Building Council (USGBC), www.usgbc.org

1.3 CONTRACTOR

A. The product and work shall be supplied by a contractor having experience with Porous Paving installation. Provide Pervious Concrete Contractor Certification from the National Ready Mixed Concrete Association.

1.4 QUALITY ASSURANCE

A. Special Equipment: Some special equipment (compacting roller; misters, etc.) specific to porous concrete placement will need to be purchased or built by the placing Contractor.

B. Test Panels: Contractor is to place, joint and cure one test panel, to be a minimum of 225 square feet at the required project thickness to demonstrate to the Engineer's and Owner's satisfaction that satisfactory pavement compaction and finish can be installed at the site location.

1. Test panels may be placed at the site location. Test panels shall be evaluated for thickness, compaction and porosity.

2. If the test panels are found to be insufficiently porous or insufficiently compacted, the test panel shall be removed at the Contractor's expense and disposed of in an approved landfill.

3. If test panels are found to be satisfactory, they can be left in place and included in the completed work.

4. Determination of thickness, porosity and compaction shall be determined by an inspector of choice of the Owner.

5. Should the Contractor wish to dispute findings of inspector, acceptability shall be determined at Contractor's expense by achieving: compacted thickness according to ASTM C42 of no less than ¼" of specified thickness, void structure of 10% minimum when tested in accordance with ASTM C140, and unit weight within +/- 5 pcf of the design unit weight when tested in accordance with ASTM C140 paragraph 6.3.

C. Contractor Damage/Repair Mock-Ups: Provide a 2 x 2 foot "damage/repair" sample directly adjacent to adjacent to each required 5 x 5-foot mock-up for each paving type specified on Project. Purpose of "damage/repair' samples are to clearly indicate Contractor's ability to repair damaged concrete to match existing, should damage occur during course of construction.

D. Concrete Manufacturer Qualifications: Manufacturer of ready-mixed concrete products complying with ASTM C 94 requirements for production facilities and equipment.

E. Concrete Mix Design: Contractor shall furnish a proposed mix design with proportions of materials to Owner or Agent prior to commencement of work. The data shall include unit weights determined in accordance with ASTM C29 paragraph 11, jigging procedure. Compacted void content shall be a minimum of 10%. Cement content must be sufficient to hydrate cements but not enough to generate fluidity of mix.

F. Slip Resistance: Provide a finish surface slip resistance coefficient of friction equal or greater than 0.6 for flat surfaces and 0.8 for ramps, when tested in accordance with ASTM F 489.

1.5 SUBMITTALS

A. In accordance with Section 01 33 00 ~~01330~~ – Shop Drawings, Samples and Product Data: Procedures for submittals.

B. Paving Mix Designs: Provide documentation for each paving type specified on Drawings that will enable Owner's Authorized Representative's to better match replaced concrete:
   1. Laboratory and Cement Test Reports: Submit six (6) copies of laboratory test reports for concrete materials and a certificate with each concrete mixer truck, stating mix design, PSI, rating, slump, water and cement quantity, cement/water ration, fine and coarse aggregate and color additives.
   2. Cement:
      a. Manufacturer and plant location.
      b. Cement type, i.e. Type I, II, III, or V.
   3. Admixtures:
      a. Manufacturer and plant location.
   4. Sand:
      a. Source and Type.
   5. Aggregates:
      a. Source and Type.

C. Sign certification from a licensed structural engineer.

D. Certification that Owner's Authorized Representative's mock-up has been reviewed and that materials and processes provide, will achieve intended effects indicated on Owner's Authorized Representative's mock-up.

E. Submit specification data "Cut Sheets" for integral color, color hardener, release agent, plastic dowel sleeves, curing agents, chemical stain, expansion joint filler, reinforcement, joint sealant and clear sealer.

F. Products; Submit one pound samples, clearly identified, for each component used to prepare each paving type, including but not limited to, cement, sand, aggregate, coloring pigment, release agents, and chemical stains.

G. Samples and data:
   1. Pavers: Provide two pavers on the type, size and finish as specified on the drawings
   ~~F.~~2. Paver edge restraint: Provide one sample of paver restraint on the type, size and finish as specified on the drawings

G. LEED certification product data as specified in Division 1, Section 01 81 13, "SUSTAINABLE DESIGN REQUIREMENTS", for the following LEED credits:

   1. Credit MR 4.1 & 4.2, Recycled Content

   2. Credit MR 5.1 & 5.2, Regional Materials, Manufactured & Harvested / Extracted Locally

1.6 DELIVERY, STORAGE, AND HANDLING

A. In accordance with Section 01640- Product Handling and Protection: Transport, handle, store, and protect.

B. Store materials in dry and protected locations and protect from damage.

C. Do not change brand of cement nor source of aggregate during course of work.

1.7 SITE CONDITIONS

A. Do not place concrete when subbase surface temperature is less than 40 degrees F, nor when surface is wet.

1.8 COORDINATION

A. In accordance with Section 01310 – Project Coordination

B. Ensure that irrigation sleeves, electrical conduit, food cart outlets, and other utility elements are accommodated and as-built located prior to pouring concrete.

1.9 INSPECTION OF SITE

A. Verify conditions at site affect Work of this Section, and take field measurements as requires. Report major discrepancies between Drawings and field dimensions to Owner's Authorized Representative prior to commencing work

PART 2 - PRODUCTS

2.01 POROUS CONCRETE PAVING

A. Installed system:

1. Albedo: Minimum Solar Reflectance Index (SRI) of 29.

2. Permeability: Minimum permeability rate 60 percent or not less than an infiltration rate of 1.1 in./hr. for a 20-year design life. Determine the field water infiltration rate of in place pervious concrete in accordance with ASTM C1701.

3. Density and void content: Determine the density and void content of freshly mixed pervious concrete in accordance

2.2 UNIT PAVER SYSTEMS

A. Ceramic Paver:

1. Comply with ASTM C666-03, C 1028-96, C 170, E 92, C936, C 67-02, C 97-02, C 241-97

2. Average compressive strength of 8,000 psi (55 MPa) with no individual unit under 7,200,psi (50 MPa).

3. Maximum 1 percent loss in dry mass per unit in minimum 50 freeze-thaw cycles when tested according to ASTM C 67.

B. Installed system:

1. Permeability: Minimum permeability rate 60 percent or not less than an infiltration rate of 1.1 in./hr. for a 20-year design life

2.3 PAVER RESTRAINTS

A. Paver Edge Restraints: steel edging as indicated in the Drawings.

1. Product: Permaloc Structure Edge, 3/16" x 2-1/4" high, extruded aluminum, 6063 alloy, T6 hardness, paver restraint edging for straight-line and curvilinear applications in corrugated L-shaped profile. Horizontal base shall have holes spaced 4 inches apart along its length to receive spikes.

2. Manufacturer: Permaloc Corporation, Holland MI 49424, telephone (800) 356-9660 or (616) 399-9600.

3. Thickness: 3/16 inch section shall have 0.210 inch thick exposed top lip.

4. Length: 8 feet.

5. Connection Method: Section ends shall splice together with horizontal 0.060 inch thick x 1 inch wide x 4 inches long aluminum sliding connector.

6. Anchoring: 3/8 inch x 10 inches bright spiral steel spike. Use plastic washers if desired. For hardened surfaces (i.e. concrete, masonry, etc.) use 3/16 inch x 1-1/2 inches or longer Ardox concrete nail or drive pin fastener equal to Hilti DX 40 powder actuated pin, Ramset Trakfast Automatic Fastening System pin, or Tapcon.

7. Finish: Black DuraFlex Painted. Paint finish shall comply with AAMA 2603 for electrostatically baked on paint.

~~2.3~~2.4 FORMS

A. Form work to be new, #2 grade Douglas Fir, free of knots, checks, bows, and cracks.

~~2.4~~2.5 MATERIALS AND FINISHES

A. Porous Concrete Paving

1. Color: Per plan.

2. Aggregate: Per plan.

3. Finish: Per Plan.

B. Ceramic Paver System

1. Color: Per plan.

2. Finish: Per Plan.

3. Size: Per Plan

4. Type: Ekopaver or equal

5. Manufacturer: Airostone Corp. 435 Harriet St Suite 100, San Francisco, CA 94103, Tel: 415-261-1229

6. Distributor: Peninsula Building Materials, 1175 Aster Ave Sunnyvale, CA, Tel: 408-246-0550

~~2.5~~2.6 GENERAL:

A. Locally available material having a record of satisfactory performance shall be used.

~~2.6~~2.7 CEMENT:

A. Portland Cement Type I or II conforming to ASTM C150 or Portland cement Type IP or IS, conforming to ASTM C595.

B. Cement Content: For pavement subject to vehicular traffic loading, Portland Cement content shall not be less than 630 pounds per cubic yard.

~~2.7~~2.8 AGGREGATE:

A. Use 3/8" coarse aggregate which meets 3/8" to No. 16 per ASTM C33, or meeting 3/8" to No. 50 per ASTM D448. If other gradation of aggregate is to be used, submit data on proposed material to owner for approval. Larger aggregate sizes increase pore size but decrease workability. Aggregates which are well graded reduce porosity, and may require reduction of cementitous content to meet void specifications. Note that reductions below the minimums listed in Section 1.4, C of this document require written approval from the Engineer and Owner's Representative.

B. Aggregate content: The volume of aggregate per cubic yard shall be equal to 27 cubic feet when calculated as a function of the unit weight determined in accordance with ASTM C29 jigging procedure. Fine aggregate, if used, should not exceed 3 cubic feet and shall be included in the total aggregate volume.

~~2.8~~2.9 AGGREAGATE BASE:

A. Standard Specifications Section 26-1.02B Class 2 Preamble Aggregate Base.

~~2.9~~2.10 ADMIXTURES:

A. Type A Water Reducing Admixtures ------ ASTM C494
Type B Retarding ---------- ASTM C494

Type D Water Reducing/Retarding -------- ASTM C494

A hydration stabilizer will be utilized and is recommended in the design and production of porous concrete. This stabilizer suspends cement hydration by forming a protective barrier around the cementitious particles, which delays the particles from achieving initial set. The admixture's primary function should be as a hydration stabilizer, however it must also meet the requirements of ASTM C494 Type B Retarding or type D Water Reducing/Retarding admixtures.

Air entraining agents shall comply with ASTM C260.

B. Admixtures shall be used in accordance with the manufacturer's instructions and recommendations.

~~2.10~~2.11 WATER:

A. Potable or shall comply with conventional local good concrete practice.

B. Free from deleterious materials such as oils, acids and organic matter.

C. Mix water:

1. Mix water shall be such that the cement paste displays a wet metallic sheen without causing the paste to flow from the aggregate.

2. Mix water yielding a cement paste with a dull-dry appearance has insufficient water for hydration.

3. Insufficient water results in inconsistency in the mix and poor bond strength.

D. High water content results in the paste sealing the void system primarily at the bottom and provides a poor surface bond.

~~2.11~~2.12 REINFORCEMENT:

A. Fiberglass reinforced plastic (FRP) reinforcing bar shall be used to tie adjacent concrete slabs together. FRP rebar shall be of at least one-half inch diameter, uni-directionally reinforced, placed twelve inches into each slab on thirty inch or closer spacing. Steel or epoxy-coated steel shall not be used due to the exposure to moisture experienced in porous concrete.

~~2.12~~2.13 DRAIN FABRIC

A. Drain fabric, to be used as a barrier between different bedding materials and also act as pavement stabilizer.

~~A.~~

PART 3 - EXECUTION

3.1 POROUS PAVING SYSTEM EXECUTION

3.2 SUBGRADE PREPARATION AND FORM WORK

A. Subgrade Material:

1. The top 6" shall be composed of granular or gravelly soil that is predominantly sandy with no more than a moderate amount of silt or clay. Granular subbase may be placed over the subgrade.

B. Subgrade Permiability:

1. Subgrade should have a reasonable level of permeability. One suggested test for subgrade permeability is a double ring infiltrometer.

C. Subgrade support:

1. The subgrade shall be compacted by a mechanical vibratory compactor to 92 –95% of a maximum dry density as established by ASTM D1557 or AASHTO T180. Subgrade stabilization shall not be permitted.

2. If fill material is required to bring the subgrade to final elevation (embankment), it shall be clean and free of deleterious materials. It shall be placed in 8" maximum layers, and compacted by a mechanical vibratory compactor to a minimum density of 92% of a dry density as established by ASTM D1557 or AASHTO T180.

D. Subgrade Moisture:

1. The subgrade shall be in a moist condition (+/- 3% of the optimum moisture content as determined by the modified compaction test ASTM D1557 or AASHTO T180).

E. Forms:

1. Forms may be of wood or steel and shall be the depth of the pavement. Forms shall be of sufficient strength and stability to support mechanical equipment without deformation of plan profiles following spreading, strike-off and compaction operations. Forms shall have a removable spacer of ½" to 5/8" thickness placed above the depth of pavement. The spacers are removed following placement and vibratory strike-off to allow roller compaction. Forms shall allow for tie-in to adjacent concrete via the use of fiberglass reinforced plastic (FRP) reinforcing bar.

3.3 MIXING, HAULING AND PLACING

A. Mix Time:

1. Truck mixers shall be operated at the speed designated as mixing speed by the manufacturer for 75 to 100 revolutions of the drum.

B. Transportation:

1. The Portland Cement aggregate mixture may be transported or mixed on-site and should be used within one hour of the introduction of mix water, unless otherwise approved by an engineer. This time can be increased to 90 minutes when utilizing the hydration stabilizer specified in Section 2.5 of this document.

C. Discharge:

1. Each mixer will be inspected for appearance of concrete uniformity. Water may be added to obtain the required mix consistency. A minimum of 20 revolutions at the manufacturer's designated mixing speed shall be required following the addition of water to the mix. Discharge shall be a continuous operation and shall be completed as quickly as possible. Concrete shall be deposited as close to its final position as practicable and such that fresh concrete enters the mass of previously placed concrete.

D. Placing and Finishing:

1. Unless otherwise approved by the Owner or Engineer in writing, the Contractor shall provide mechanical equipment of either slipform or form riding with a following compactive unit that will provide a minimum of 10 psi vertical force. The porous concrete pavement will be placed to the required cross-section and shall not deviate more than +/- 3/8" in 10 feet from profile grade.

2. Normal placement procedures involve utilizing a mechanical vibratory screed to strike off the concrete ½" to 5/8" above final height, utilizing the form spacers described in Section 4.5 of this document. Where the use of a vibratory screed can not be used traditional manual methods may be used to strike off the concrete. Following strike-off, the spacers are removed, and the concrete compacted to form level utilizing a steel roller made from nominal 8" diameter steel pipe. Care should be taken during compaction that full compactive force is achieved without working the concrete surface enough to seal off the surface porosity. Apparent defects in the surface can be remedied by placing some fresh mix into depressions and compacting using a hand tamper.

3. After roller compacting and defect inspection/fixing, no further finishing is performed on the concrete.

E. Curing:

1. Curing procedures shall begin within 20 minutes of final placement operations.

2. The pavement surface shall be covered with a minimum of 6ml thick polyethylene sheet or other approved covering material. The low water/cement ratio and high amount. The cover shall overlap all exposed edges and shall be secured (without using dirt or stone) to prevent dislocation due to winds or adjacent traffic conditions.

3. Cure Time:Cure times listed are ideal. Cover shall remain on during cure. No vehicular traffic shall be allowed for 10 days.

F. Jointing:

1. Control (contraction) joints shall be installed at regular intervals not to exceed 40 feet, or two times the width of the placement. They shall be installed at 1/4 the depth of the thickness of the pavement. These joints can be installed in the plastic concrete or saw-cut. Joints installed in the plastic concrete are generally rolled in utilizing a small roller

with a flange welded to the center. This type of jointing is done immediately after roller compaction and immediately prior to curing.

2. If joints are saw-cut, the procedure should begin as soon as the pavement has hardened sufficiently to prevent raveling and uncontrolled cracking, normally after 24 hours. Curing cover must be removed and recovered after joint sawing. Transverse construction joints shall be installed whenever placing is suspended long enough to allow the concrete to begin to harden. In order to assure aggregate bond at construction joints, a bonding agent suitable for bonding fresh concrete to existing concrete shall be brushed, rolled or sprayed on existing pavement surface edge. Isolation (expansion) joints will not be used except when pavement is abutting slabs or other adjoining structures.

G. Grinding:

1. Upon completion of curing, concrete surface shall be ground. Grinding is performed to improve surface quality and increase durability by preventing future raveling. Surface is ground to the depth of the surface aggregate midpoint.

3.4 REPAIRS AND PROTECTION

A. Remove and replace concrete paving that is broken, damaged, defective, or does not meet the requirements of this Section.

B. Protect concrete from damage until Final Payment. Exclude traffic from paving for at least 28 days after placement. When construction traffic is permitted, maintain paving as clean as possible by removing surface stains and spillage of materials ads they occur.

C. Maintain concrete paving free of stains, discoloration, dirt and other foreign material until Final Payment.

3.5 CLEANUP

A. At completion of Work, remove concrete stains from adjacent work, including but not limited to dissimilar paving types, walls, columns, railing posts, light fixtures, plant materials, to satisfaction of Owner's Authorized Representative.

3.6 PAVING FINISH SCHEDULE

A. Provide paving finishes, as indicated on Paving Schedule on Drawings.

3.7 UNIT PAVER SYSTEMS

3.8 INSPECTION

A. Examine the substrate under which paving is to be installed. Notify the Owner's Representative, in writing of conditions detrimental to the proper and timely completion of the work. Do not proceed with the work until unsatisfactory conditions have been corrected.

3.9 LINES AND LEVELS

A. Finished grades on plans are given in feet and decimals of feet and are to be the top of graded or paved surfaces. Slope uniformly between given spot elevations unless otherwise indicated.

B. Surfaces shall be true to within 1/8 inch when tested in directions with a 10 foot straight edge. There shall be no pools of water standing on the pavement after a rain.

C. Transitions between changes in vertical gradient of walks and pavings shall be smooth and gradual with no abrupt or sharp changes.

D. Horizontal layout shall not vary more than ½ inch from dimensions indicated on the Drawings.

3.10 PREPERATION OF SUBGRADE

A. Refer to Section 31 00 00. No work shall commerce until the sub-grade has been favorably reviewed and approved by the Soils Engineer.

3.11 AGGREGATE BASE

A. Install under paving where indicated on drawings

B. Install geotextile on top of compacted soil sub-grade. Overlap the fabric where the end of each fabric sections are. Fabric should turn up on sides to the edge of the curb.

C. Spread aggregate base on the prepared sub-grade to such a depth that when thoroughly compacted it will confirm to grades and dimensions shown on top of the drain fabric. Spread and compact in accordance with Section 26 of State specifications.

D. Install sub-drain as needed or required by the Soil Engineer.

3.12 SAND LEVELING BED

A. Install drain fabric on top of compacted aggregate base. Overlap the fabric where the end of each fabric sections are. Fabric should turn up on sides to the edge of the curb.

B. Install to a unicorn thickness of 1” to 1-1/2” course cleaned and washed sand on top of the drain fabric.

3.13 CERAMIC POROUS PAVER

A. Prepare sub-grade and sand leveling bed so that when compacted, the paving unit will be 1/8 to ¼ inch above adjacent paving, draining inlets, concrete collars or channels.

B. Pavers shall be cleaned and free of foreign materials before installation.

C. Start installation from a corner or straight edge and proceed forward over undisturbed sand laying course.

D. Neatly cut and fit pavers against edging and vertical structures.

E. Install paving units hand tight and flush on the undisturbed sand laying course.

F. Use a low-amplitude plate compactor capable of at least minimum of 5,000 lbf (22 kN) at a frequency of 75 to 100 Hhz to vibrate the pavers into the sand. Remove cracked or damaged pavers and replace with new units.

G. Simultaneously spread, sweep and compact dry 60 grid clean sand into joints continuously until full. This will require at least 2 to 3 passes with a plate compactor. Do not impact with 6 ft (2m) of unrestrained edges of paving units.

H. Work within 6 ft of the laying faces shall be left fully compacted with sand-filled joints at the end of each day or compacted upon acceptance of the work. Cover the laying face or incomplete areas with plastic sheets overnight if not closed without and compacted pavers with joint sand to prevent exposed bedding sand from becoming saturated from rainfall.

I. Remove excess sand from surface when installation is complete.

J. Surface shall be broom clean after removal of excess joint sand.

3.14 CLEANING AND PROTECTION

A. When work is compete, clean entire paving installation using no acid cleaners unless favorable reviewed, in writing, by the Owner's Representatives.

B. Protect finished installation from damage until final acceptance of entire project.

END OF SECTION

SECTION 32 84 00 - PLANTING IRRIGATION

PART 1 - **GENERAL**

1.1 SUMMARY

A. It is the intent of the specifications and drawings that the finished system is complete in every respect and shall be ready for operation satisfactory to the ~~Owner~~City.

B. The work shall include materials, labor, services, transportation, and equipment necessary to perform the work as indicated on the drawings, in these specifications, and as necessary to complete the contract.

1.2 CONSTRUCTION DRAWINGS

A. Due to the scale of the drawings, it is not possible to indicate offsets, fittings, sleeves, etc. which may be required. The Contractor shall carefully investigate the structural and finished conditions affecting his work and plan his work accordingly, furnishing such fittings, etc. as may be required to meet such conditions. Drawings are generally diagrammatic and indicative of the work to be installed. The work shall be installed in such a manner as to avoid conflicts between irrigation systems, planting, and architectural features.

B. Work called for on the drawings by notes or details shall be furnished and installed whether or not specifically mentioned in the specifications. When an item is shown on the plans but not shown on the specifications or vice versa, it shall be deemed to be as shown on both. The Design Consultant shall have final authority for clarification.

C. The Contractor shall not willfully install the irrigation system as shown on the drawings when it is obvious in the field that obstructions, grade differences or discrepancies in area dimensions exist that might not have been considered in engineering. Such obstructions or differences should be brought to the attention of the Design Consultant as soon as detected. In the event this notification is not performed, the Irrigation Contractor shall assume full responsibility for any revision necessary.

1.3 QUALITY ASSURANCE

A. Provide at least one English speaking person who shall be present at all times during execution of this portion of the work and who shall be thoroughly familiar with the type of materials being installed and the manufacturer's recommended methods of installation and who shall direct work performed under this section.

B. Manufacturer's directions and detailed drawings shall be followed in ~~all~~ cases where the manufacturer of articles used in this contract furnish directions covering points not shown in the drawings and specifications.

C. Local, municipal, and state laws, rules and regulations governing or relating to any portion of this work are hereby incorporated into and made a part of these specifications, and their provisions shall be carried out by the Contractor. Anything contained in these specifications shall not be construed to conflict with any of the above rules and regulations of the same. However, when these specifications and drawings call for or describe materials, workmanship, or construction of a better quality, higher standard, or larger size than is required by the above rules and regulations, the provisions of these specifications and drawings shall take precedence.

D. Materials supplied for this project shall be new and free from any defects. D~~All d~~efective materials shall be replaced immediately at no additional cost to ~~Owne~~the ~~r~~City.

E. The Contractor shall secure the required licenses and permits including payments of charges and fees, give required notices to public authorities, verify permits secured or arrangements made by others affecting the work of this section.

1.4 SUBMITTALS

A. Submittals Materials List:
1. After award of contract and before any irrigation system materials are ordered from suppliers or delivered to the job site, submit to the City~~Owner~~ a complete list of irrigation system materials, or processes proposed to be furnished and installed as part of this contract.
2. The submittals materials list shall include the following information:
   a. A title sheet with the job name, the contractor's name, contractor's address and telephone number, submittal date and submittal number.
   b. An index sheet showing the item number (i.e. 1,2,3, etc.); an item description (i.e. sprinkler head); the manufacturer's name (i.e. Hunter Industries); the item model number (i.e. I-40-ADV/36V); and the page(s) in the submittal set that contain the catalog cuts.
   c. The catalog cuts shall be one or two pages copied from the most recent manufacturer's catalog that indicate the product submitted. Do not submit parts lists, exploded diagrams, price lists or other extra information.
   d. The catalog cuts shall clearly indicate the manufacturer's name and the item model number. The item model number, the specified options and specified sizes shall be circled on the catalog cuts.
   e. Submittals for equipment indicated on the legend without manufacturer names, or "as approved", shall contain the manufacturer, Class or Schedule, ASTM numbers and/or other certifications as indicated in these specifications.
3. Submittal materials list format requirements:
   a. Submittals shall be provided as one complete package for the project. Multiple partial submittals will not be reviewed.
   b. Submittal package shall be stapled or bound in such a way as to allow for disassembly for review processing. Submittals shall not have tabs, tab sheets, spiral binding, or any other type of binding that will interfere with automated copying of submittals.
   c. Submittal package shall have all pages numbered in the lower right hand corner. Page numbers shall correspond with submittal index.
   d. Re-submitted packages must be revised to include only the equipment being re-submitted. Equipment previously reviewed and accepted shall not be re-submitted in the materials list/index sheet or in the catalog cut sheet package.

B. Substitutions: If the Irrigation Contractor wishes to substitute any equipment or materials for those equipment or materials listed on the irrigation drawings and specifications, he may do so by providing the following information to the Design Consultant or ~~Owner's~~ the City's authorized representative for approval.
1. Provide a written statement indicating the reason for making the substitution.
2. Provide catalog cut sheets, technical data, and performance information for each substitute item.
3. Provide in writing the difference in installed price if the item is accepted.

C. The Design Consultant ~~or Owner's authorized representative~~ will allow no substitutions without prior written acceptance.

D. Manufacturer's warranties shall not relieve the Contractor of his liability under the guarantee. Such warranties shall only supplement the guarantee.

E. The Design Consultant ~~or Owner's authorized representative~~ will not review the submittal package unless provided in the format described above.

1.5 EXISTING CONDITIONS

A. The Contractor shall verify and be familiar with the locations, size and detail of points of connection provided as the source of water connection to the irrigation system.

B. Irrigation design is based on the available static water pressure shown on the drawings. Contractor shall verify static water on the project prior to the start of construction. Should a discrepancy exist, notify the Design Consultant ~~and Owner's authorized representative~~ prior to beginning construction.

C. Prior to cutting into the soil, the Contractor shall locate cables, conduits, sewer septic tanks, and other utilities as are commonly encountered underground and he shall take proper precautions not to damage or disturb such improvements. If a conflict exists between such obstacles and the proposed work, the Contractor shall promptly notify the Design Consultant ~~and Owner~~ who will arrange for relocations. The Contractor will proceed in the same manner if a rock layer or any other such conditions are encountered.

D. The Contractor shall protect existing utilities and features to remain on and adjacent to the project site during construction. Contractor shall repair, at his own cost; all damage resulting from his operations or negligence.

E. The Irrigation Contractor shall coordinate with the General Contractor for installation of required sleeving as shown on the plans prior to paving operations.

F. The Contractor shall verify and be familiar with the existing irrigation systems in areas adjacent to and within the Project area of work.

G. The Contractor shall protect ~~all~~ existing irrigation systems, in areas adjacent to and within the project area of work, from damage due to his operations.

H. Contractor shall notify ~~Owner's Representative~~the Design Consultant if any existing system is temporarily shut off, capped or modified. Provide 48-hour notice, prior to turning off or modifying any existing irrigation system.

I. The Contractor shall repair or replace existing irrigation systems, in areas adjacent to and within the project area of work, damaged by the construction of this project. Adjacent irrigation systems shall be made completely operational and provide complete coverage of the existing landscaped areas. All repairs shall be complete to the satisfaction of the ~~Owner's Representative.~~Design Consultant

J. The contractor shall provide bore holes under any existing pavement or paving encountered for the required lateral, mainline and low voltage control wire sleeving. Bore holes under 2 inches in diameter and smaller shall be made with a BulletMole® underground boring tool as manufactured by Dimension Tools, LLC (Contact telephone number (888)-650-5554 or at www.bulletmole.com). Bore holes larger than 2 inches in diameter shall be made with an approved mechanical boring tool. No air jacking or hydraulic boring of any kind shall be allowed.

1.6 INSPECTIONS

A. The Contractor shall permit the Design Consultant ~~and Owner's authorized representative~~ to visit and inspect any part of the work and shall provide safe access for such visits.

B. Where the specifications require work to be tested by the Contractor, it shall not be covered over until accepted by the Design Consultant, ~~Owner's authorized representative~~, and/or governing agencies. The Contractor shall be solely responsible for notifying the Design Consultant, ~~Owner~~, and governing agencies, a minimum of 48 hours in advance, where and when the work is ready for testing. Should any work be covered without testing or acceptance, it shall be, if so ordered, uncovered at the Contractor's expense.

C. Inspections will be required for the following at a minimum:
   1. Pre-construction meeting.
   2. System layout.
   3. Pressure test of irrigation mainline (Four hours at 125 PSI or 120% of static water pressure, whichever is greater.) Mainline pressure loss during test shall not exceed 2 PSI.
   4. Coverage test of irrigation system. Test shall be performed prior to any planting.
   5. Final inspection prior to start of maintenance period.
   6. Final acceptance prior to turnover.

D. Site observations and testing will not commence without the field record drawings as prepared by the Irrigation Contractor. Record drawings must complete and up to date for each site visit.

E. Work that fails testing and is not accepted will be retested. Hourly rates and expenses of the Design Consultant~~, Owner's authorized representative~~, and governing agencies for re-inspection or retesting will be paid by the Irrigation Contractor at no additional expense to ~~Owner~~the City.

1.7 STORAGE AND HANDLING

A. Use means necessary to protect irrigation system materials before, during, and after installation and to protect the installation work and materials of other trades. In the event of damage, immediately make repairs and replacements necessary to the acceptance of the Design Consultant ~~and Owner~~ and at no additional cost to the City~~Owner~~.

B. Exercise care in handling, loading, unloading, and storing plastic pipe and fittings under cover until ready to install. Transport plastic pipe only on a vehicle with a bed long enough to allow the pipe to lay flat to avoid undue bending and concentrated external load.

1.8 CLEANUP AND DISPOSAL

A. Dispose of waste, trash, and debris in accordance with applicable laws and ordinances and as prescribed by authorities having jurisdiction. Bury no such waste material and debris on the site. Burning of trash and debris will not be permitted. The Contractor shall remove and dispose of rubbish and debris generated by his work and workmen at frequent intervals or when ordered to do so by the ~~Owner's authorized representative~~design Consultant.

B. At the time of completion the entire site will be cleared of tools, equipment, rubbish and debris which shall be disposed of off-site in a legal disposal area.

1.9 TURNOVER ITEMS

A. Record Drawings:
   1. Record accurately on one set of drawings changes in the work constituting departures from the original contract drawings and the actual final installed locations of required components as shown below.
   2. The record drawings shall be prepared to the satisfaction of the City~~Owner~~. Prior to final inspection of work, submit record drawings to the Design Consultant~~-~~.~~or Owner's authorized representative~~.

3. Record drawings shall be prepared using AutoCAD 2012 drafting software and the original irrigation drawings as a base. No manual drafted record drawings shall be acceptable. The Contractor may obtain digital base files from the Design Consultant. ~~or Owner's authorized representative.~~
4. If the Contractor is unable to provide the AutoCAD drafting necessary for the record drawings the irrigation designer does provide record drawing drafting as a separate service.
5. Prior to final inspection of work, submit record drawings plotted onto vellum sheets for review by the Design Consultant ~~or Owner's authorized representative~~. After acceptance by the Design Consultant, City Inspector ~~or Owner's authorized representative~~ re-plot the record drawings onto reproducible Mylar sheets. The Contractor shall also provide record drawing information on a digital AutoCAD Release 2012 drawing file. Digital files shall be provided on a compact disc (CD) clearly marked with the project name, file descriptions and date.
   a. Record drawing information and dimensions shall be collected on a day-to-day basis during the installation of the pressure mainline to fully indicate ~~all~~ routing locations and pipe depths. Locations for ~~all~~ other irrigation equipment shall be collected prior to the final inspection of the work.
   b. Two dimensions from two permanent points of reference such as buildings, sidewalks, curbs, streetlights, hydrants, etc. shall be shown for each piece of irrigation equipment shown below. Where multiple components are installed with no reasonable reference point between the components, dimensioning may be made to the irrigation equipment. Irrigation symbols shall be clearly shown matching the irrigation legend for the drawings. Lettering on the record drawings shall be minimum 1/8 inch in size.
6. Show locations and depths of the following items:
   a. Point of connection (including water POC, backflow devices, master control valves, flow sensors, etc.)
   b. Routing of sprinkler pressure main lines (dimensions shown at a maximum of 100 feet along routing)
   c. Isolation valves
   d. Automatic remote control valves (indicate station number and size)
   e. Quick coupling valves
   f. Drip air relief and flush valves
   g. Routing of control wires where separate from irrigation mainline
   h. Irrigation controllers (indicate controller number and station count)
   i. Related equipment (as may be directed)

B. Controller Charts:
1. Provide one controller chart for each automatic controller. Chart shall show the area covered by the particular controller. The areas covered by the individual control valves shall be indicated using colored highlighter pens. A minimum of six individual colors shall be used for the controller chart unless less than six control valves are indicated.
2. Design Consultant ~~or Owner's authorized representative~~ must approve record drawings before controller charts are prepared.
3. The chart is to be a reduced copy of the actual "record" drawing. In the event the controller sequence is not legible when the drawing is reduced, it shall be enlarged to a readable size.
4. When completed and approved, the chart shall be hermetically sealed between two pieces of plastic, each piece being a minimum 20 mils in thickness.

C. Operation and Maintenance Manuals:
1. Two individually bound copies of operation and maintenance manuals shall be delivered to the Design Consultant ~~or Owner's authorized representative~~ at least 10 calendar days prior to final inspection. The manuals shall describe the material installed and the proper operation of the system.
2. Each complete, bound manual shall include the following information:

3. Index sheet stating Contractor's address and telephone number, duration of guarantee period, list of equipment including names and addresses of local manufacturer representatives.
   a. Operating and maintenance instructions for equipment.
   b. Spare parts lists and related manufacturer information for equipment.

D. Equipment:
1. Supply as a part of this contract the following items:
   a. Two (2) wrenches for disassembly and adjustment of each type of sprinkler head used in the irrigation system.
   b. Three 30-inch sprinkler keys for manual operation of control valves.
   c. Two keys for each automatic controller.
   d. Two quick coupler keys with a 3/4" bronze hose bib, bent nose type with hand wheel and two coupler lid keys.
   e. One valve box cover key or wrench.
   f. Six extra sprinkler heads of each size and type.
2. The above equipment shall be turned over to ~~Owner's authorized representative~~Design Consultant at the final inspection.

1.10 COMPLETION

A. At the time of the pre-maintenance period inspection, the ~~Design Consultant,~~ Design Consultant~~Owner's authorized representative~~, and governing agencies will inspect the work, and if not accepted, will prepare a list of items to be completed by the Contractor. Punch list to be checked off by contractor and submitted to Design Consultant ~~or Owner's Authorized representative~~ prior to any follow-up meeting. This checked off list to indicate that all punch list items have been completed. At the time of the post-maintenance period or final inspection the work will be re-inspected and final acceptance will be in writing by the Design Consultant, ~~Owner's authorized representative~~, and governing agencies.

B. The Design Consultant ~~Owner's authorized representative~~ shall have final authority on all portions of the work.

C. After the system has been completed, the Contractor shall instruct Design Consultant~~Owner's authorized representative~~ in the operation and maintenance of the irrigation system and shall furnish a complete set of operating and maintenance instructions.

D. Any settling of trenches which may occur during the one-year period following acceptance shall be repaired to the City's~~Owne~~r's satisfaction by the Contractor without any additional expense to the ~~Owner~~City. Repairs shall include the complete restoration of ~~all~~ damage to planting, paving or other improvements of any kind as a result of the work.

~~1.11 GUARANTEE~~

~~A. The entire sprinkler system, including work done under this contract, shall be unconditionally guaranteed against defects and fault of material and workmanship, including settling of backfilled areas below grade, for a period of one (1) year following the filing of the Notice of Completion.~~

~~B. Should any problem with the irrigation system be discovered within the guarantee period, it shall be corrected by the Contractor at no additional expense to Owner within ten (10) calendar days of receipt of written notice from Owner. When the nature of the repairs as determined by the Owner constitute an emergency (i.e. broken pressure line) the Owner may proceed to make repairs at the Contractor's expense. Any damages to existing improvement resulting either from faulty materials or workmanship, or from the necessary repairs to correct same, shall be repaired to the satisfaction of the Owner by the Contractor, all at no additional cost to the Owner.~~

~~C. Guarantee shall be submitted on Contractors own letterhead as follows:~~

~~GUARANTEE FOR SPRINKLER IRRIGATION SYSTEM~~

~~We hereby guarantee that the sprinkler irrigation system we have furnished and installed is free from defects in materials and workmanship, and the work has been completed in accordance with the drawings and specifications, ordinary wear and tear and unusual abuse, or neglect excepted. We agree to repair or replace any defective material during the period of one year from date of filing of the Notice of Completion and also to repair or replace any damage resulting from the repairing or replacing of such defects at no additional cost to the Owner. We shall make such repairs or replacements within 10 calendar days following written notification by the Owner. In the event of our failure to make such repairs or replacements within the time specified after receipt of written notice from Owner, we authorize the Owner to proceed to have said repairs or replacements made at our expense and we will pay the costs and charges therefore upon demand.~~

~~PROJECT NAME:~~
~~PROJECT LOCATION:~~

~~CONTRACTOR NAME:~~
~~ADDRESS:~~

~~TELEPHONE:~~

~~SIGNED:~~

~~DATE:~~

PART 2 - **MATERIALS**

2.1 SUMMARY

Use only new materials of the manufacturer, size and type shown on the drawings and specifications. Materials or equipment installed or furnished that do not meet Design Consultant 's, ~~Owner's~~City's, or governing agencies standards will be rejected and shall be removed from the site at no expense to the ~~Owner~~City.

2.2 PIPE

A. Pressure supply lines 2 inches in diameter and up to 3 inches in diameter downstream of backflow prevention unit shall be Class 315 solvent weld PVC. Piping shall conform to ASTM D2241.

B. Non-pressure lines 3/4 inch in diameter and larger downstream of the remote control valve shall be SCH 40 solvent weld PVC conforming to ASTM D1785.

2.3 METAL PIPE AND FITTINGS

A. Brass pipe shall be 85 percent red brass, ANSI, IPS Standard 125 pounds, Schedule 40 screwed pipe.

B. Fittings shall be medium brass, screwed 125-pound class.

C. Copper pipe and fittings shall be Type "K" sweat soldered, or brazed as indicated on the drawings.

2.4 PLASTIC PIPE AND FITTINGS

A. Pipe shall be marked continuously with manufacturer's name, nominal pipe size, schedule or class, PVC type and grade, National Sanitation Foundation approval, Commercial Standards designation, and date of extrusion.

B. P~~All p~~lastic pipe shall be extruded of an improved PVC virgin pipe compound in accordance with ASTM D2672, ASTM D2241 or ASTM D1785.

C. S~~All s~~olvent weld PVC fittings shall be standard weight Schedule 40 (and Schedule 80 where specified on the irrigation detail sheet, mainline fittings shall be Schedule 80 PVC) and shall be injection molded of an improved virgin PVC fitting compound. Slip PVC fittings shall be the "deep socket" bracketed type. Threaded plastic fittings shall be injection molded. All tees and ells shall be side gated. Fittings shall conform to ASTM D2464 and ASTM D2466.

D. Threaded nipples shall be standard weight Schedule 80 with molded threads and shall conform to ASTM D1785.

E. Solvent cementing of plastic pipe and fittings shall be a two-step process, using primer and solvent cement applied per the manufacturer's recommendations. Cement shall be of a fluid consistency, not gel-like or ropy. Solvent cementing shall be in conformance with ASTM D2564 and ASTM D2855.

F. When connection is plastic to metal, female adapters shall be hand tightened, plus one turn with a strap wrench. Joint compound shall be non-lead base Teflon paste, tape, or equal.

G. Pressure mainlines installed with solvent weld PVC fittings shall be installed with concrete thrust blocking at directional changes in the mainline routing. Concrete thrust blocking shall not be required when ductile iron fittings and mechanical restraints are specified.

2.5 VALVES

A. Butterfly Valves:
   1. Butterfly valves shall be of the manufacturer, size, and type indicated on the drawings.
   2. Butterfly valves shall have cast iron bodies, and stainless steel stems. Butterfly valves shall have ductile iron porcelain enamel coated disc.
   3. Butterfly valves shall have a minimum working pressure of not less than 150 PSI and shall conform to AWWA standards.

B. Quick Coupler Valves:
   1. Quick coupler valves shall be of the manufacturer, size, and type indicated on the drawings.
   2. Quick coupler valves shall be brass with a wall thickness guaranteed to withstand normal working pressure of 150 psi without leakage. Valves shall have 1” female threads opening at base, with two-piece body. Valves to be operated only with a coupler key, designed for that purpose. Coupler key is inserted into valve and a positive, watertight connection shall be made between the coupler key and valve.

C. Automatic Control Valves:
   1. Automatic control valves shall be of the manufacturer, size, and type indicated on the drawings.
   2. Automatic control valves shall be electrically operated.
   3. Provide Christy's valve ID tags for each remote control valve with valve number.

2.6 VALVE BOXES

A. Valve boxes shall be fabricated from a durable, weather-resistant plastic material resistant to sunlight and chemical action of soils.

B. The valve box cover shall be green in color and secured with a hidden latch mechanism or bolts.

C. The cover and box shall be capable of sustaining a load of 1,500 pounds.

D. Valve box extensions shall be by the same manufacturer as the valve box.

E. The plastic irrigation valve box cover shall be an overlapping type.

F. Automatic control valve boxes shall be 17"x11"x12" ‘nominal’ rectangular size. Valve box covers shall be marked "RCV" with the valve identification number "heat branded" onto the cover in 1-1/4 inch high letters / numbers.

G. Drip flush valve and Air relief valve boxes shall be 6" circular size. Valve box covers shall be marked with "FV" or “ARV” "heat branded" onto the cover in 1-1/4 inch high letters.

H. Quick coupler and butterfly valve boxes shall be 10" circular size. Valve box covers shall be marked with "QCV" "heat branded" onto the cover in 1-1/4 inch high letters.

2.7 AUTOMATIC CONTROLLER

A. Automatic controller shall be of the manufacturer, size, and type indicated on the drawings.

B. Controller enclosure shall be of the manufacturer, size, and type indicated on the drawings.

C. Controller shall be grounded according to local codes using equipment of the manufacturer, size, and type indicated on the drawings; or as required by local codes and ordinances.

2.8 ELECTRICAL

A. Electrical equipment shall be NEMA Type 3, waterproofed for exterior installations.

B. Electrical work shall conform to local codes and ordinances.

2.9 LOW VOLTAGE CONTROL WIRING

A. Remote control wire shall be direct-burial AWG-UF type, size as indicated on the drawings, and in no case smaller than 14 gauge.

B. Connections shall of the manufacturer, size, and type indicated on the drawings.

C. Common wires shall be white in color. Control wires shall be red (where two or more controllers are used, the control wires shall be a different color for each controller. These colors shall be noted on the "Record Drawings" plans located on controller door).

D. Ground wires shall be green in color or bare copper and in no case smaller than 6 gauge.

2.10 IRRIGATION HEADS AND DRIP EMITTERS AND INLINE DRIP TUBING

A. Irrigation heads, drip emitters and inline drip tubing shall be of the manufacturer, size, type, with radius of throw, operating pressure, and discharge rate indicated on the drawings.

B. Irrigation heads, drip emitters and inline drip tubing shall be used as indicated on the drawings.

2.11 DRIP IRRIGATION EQUIPMENT

Drip tubing equipment such as flush valves, air relief valves, wye strainers and pressure regulators shall be of the manufacturer, size, and type indicated on the drawings.

2.12 MISCELLANEOUS EQUIPMENT

A. Landscape Fabric:
1. Landscape fabric for valve box assemblies shall be 5.0- oz. weight woven polypropylene weed barrier. Landscape fabric shall have a burst strength of 225 PSI, a puncture strength of 60 lbs. and capable of water flow of 12 gallons per minute per square foot.
2. Type: DeWitt Pro 5 Weed Barrier or approved equal.

B. Equipment such as flush valves, air relief valves, and wye strainers shall be of the manufacturer, size and type indicated on the drawings.

PART 3 - **EXECUTION**

3.1 SITE CONDITIONS

A. Inspections:
1. Prior to work of this section, carefully inspect the installed work of other trades and verify that such work is complete to the point where this installation may properly commence.
2. Verify that irrigation system may be installed in strict accordance with pertinent codes and regulations, the original design, the referenced standards, and the manufacturer's recommendations.

B. Discrepancies:
1. In the event of discrepancy, immediately notify the Design Consultan~~t or Owner's authorized representative~~t.
2. Do not proceed with installation in areas of discrepancy until discrepancies have been resolved.

C. Grades:
1. Before starting work, carefully check ~~all~~ grades to determine that work may safely proceed, keeping within the specified material depths with respect to finish grade.
2. Final grades shall be accepted by the Engineer before work on this section will be allowed to begin.

D. Field Measurements:
1. Make necessary measurements in the field to ensure precise fit of items in accordance with the original design. Contractor shall coordinate the installation of irrigation materials with other work.
2. Scaled dimensions are approximate. The Contractor shall check and verify size dimensions prior to proceeding with work under this section.
3. Exercise extreme care in excavating and working near existing utilities. Contractor shall be responsible for damages to utilities, which are caused by his operations or neglect.

E. Diagrammatic Intent:
The drawings are essentially diagrammatic. The size and location of equipment and fixtures are drawn to scale where possible. Provide offsets in piping and changes in equipment locations as necessary to conform with structures and to avoid obstructions or conflicts with other work at no additional expense to ~~Owner~~City.

F. Layout:
   1. Prior to installation, the Contractor shall stake out pressure supply lines, routing and location of sprinkler heads, valves, backflow preventer, and automatic controller.
   2. Layout irrigation system and make minor adjustments required due to differences between site and drawings. Where piping is shown on drawings under paved areas, but running parallel and adjacent to planted areas, install the piping in the planted areas.

G. Water Supply:
Connections to, or the installation of, the water supply shall be at the locations shown on the drawings. Minor changes caused by actual site conditions shall be made at no additional expense to ~~Owner~~City.

H. Electrical Service:
   1. Connections to the electrical supply shall be at the locations shown on the drawings. Minor changes caused by actual site conditions shall be made at no additional expense to ~~Owner~~City.
   2. Contractor shall make electrical connections to the irrigation controller. Electrical power source to controller locations shall be provided by others.
   3. Contractor shall make electrical connections to the irrigation controller. 230-volt single-phase electrical power source to pump assembly location shall be provided by others per NEC codes.

3.2 TRENCHING

A. Excavations shall be straight with vertical sides, even grade, and support pipe continuously on bottom of trench. Trenching excavation shall follow layout indicated on drawings to the depths below finished grade and as noted. Where lines occur under paved area, these dimensions shall be considered below subgrade.

B. Provide minimum cover of 24 inches on pressure supply lines 3 inches and larger.

C. Provide minimum cover of 18 inches for control wires within planters.

D. Provide minimum cover of 24 inches for control wires within sleeves below paving.

E. Provide minimum cover of 36 inches on pressure supply lines under vehicular travel ways.

F. Provide minimum cover of 12 inches for non-pressure lines.

G. Pipes installed in a common trench shall have a 4-inch minimum space between pipes.

3.3 THRUST BLOCKS

A. Thrust blocks must be constructed of Class “B” concrete.

B. Thrust blocks shall be poured against undisturbed site soil.

C. PVC fitting joints shall be kept free of concrete. Do not encase fitting in concrete.

D. Thrust blocking shall be sized to provide the minimum bearing areas as shown below. Bearing areas indicated have been calculated for Class 200 PVC pipe at a test pressure of 150 PSI in soil with 2,000 PSI bearing capacity. Increase thrust block sizing as necessary for varying soil conditions.
   1. Provide a minimum thrust block bearing area of 2.0 square feet on bends (all degrees) and tees installed on pressure supply lines 4 inches and smaller.

3.4 BACKFILLING

A. Backfill material on lines shall be the same as adjacent soil free of debris, litter, and rocks over 1/2 inches in diameter.

B. Backfill shall be tamped in 4-inch layers under the pipe and uniformly on both sides for the full width of the trench and the full length of the pipe. Backfill materials shall be sufficiently damp to permit thorough compaction, free of voids. Backfill shall be compacted to dry density equal to adjacent undisturbed soil and shall conform to adjacent grades.

C. Flooding in lieu of tamping is not allowed.

D. Under no circumstances shall truck wheels be used to compact backfill.

E. Provide sand backfill a minimum of 4 inches over and under piping under paved areas.

3.5 PIPING

A. Piping under existing pavement may be installed by jacking, boring, or hydraulic driving. No hydraulic driving is permitted under asphalt pavement.

B. Cutting or breaking of existing pavement is not permitted.

C. Carefully inspect pipe and fittings before installation, removing dirt, scale, burrs, and reaming. Install pipe with markings up for visual inspection and verification.

D. Remove dented and damaged pipe sections.

E. Lines shall have a minimum clearance of 4 inches from each other and 12 inches from lines of other trades.

F. Parallel lines shall not be installed directly over each other.

G. In solvent welding, use only the specified primer and solvent cement and make joints in strict accordance with the manufacturer's recommended methods including wiping excess solvent from each weld. Allow solvent welds at least 15 minutes setup time before moving or handling and 24 hours curing time before filling.

H. PVC pipe shall be installed in a manner, which will provide for expansion and contraction as recommended by the pipe manufacturer.

I. Center load plastic pipe prior to pressure testing.

J. Threaded plastic-to-plastic connections shall be assembled using Teflon tape or Teflon paste.

K. For plastic-to-metal connections, work the metal connections first. Use a non-hardening pipe dope a threaded plastic-to-metal connections, except where noted otherwise. Plastic-to-metal connections shall be made with plastic female adapters.

3.6 CONTROLLER

A. The exact location of the controller shall be approved by the Design Consultant ~~or Owner's authorized representative~~ before installation. The electrical service shall be coordinated with this location.

B. The Irrigation Contractor shall be responsible for the final electrical hook up to the irrigation controller.

C. The irrigation system shall be programmed to operate during the periods of minimal use of the design area.

3.7 CONTROL WIRING

A. Low voltage control wiring shall occupy the same trench and shall be installed along the same route as the pressure supply lines whenever possible.

B. Where more than one wire is placed in a trench, the wiring shall be taped together in a bundle at intervals of 10 feet. Bundle shall be secured to the mainline with tape at intervals of 20 feet.

C. Connections shall be of an approved type and shall occur in a valve box. Provide an 18-inch service loop at each connection.

D. An expansion loop of 12 inches shall be provided at each wire connection and/or directional change, and one of 24 inches shall be provided at each remote control valve.

E. A continuous run of wire shall be used between a controller and each remote control valve. Under no circumstances shall splices be used without prior approval.

3.8 VALVES

A. Automatic control valves, quick coupler, and gate valves are to be installed in the approximate locations indicated on the drawings.

B. Valve shall be installed in shrub areas whenever possible.

C. Install valves as indicated in the detail drawings.

D. Valves to be installed in valve boxes shall be installed one valve per box.

E. Provide valve ID tags for each remote control valve with valve number.

3.9 VALVE BOXES

A. Valve boxes shall be installed in shrub areas whenever possible.

B. Each valve box shall be installed on a foundation of 3/4 inch gravel backfill, 3 cubic feet minimum. Valve boxes shall be installed with their tops 1/2 inch above the surface of surrounding finish grade in lawn areas and 2 inches above finish grade in ground cover areas.

3.10 IRRIGATION HEADS DRIP EMITTERS AND INLINE DRIP TUBING

A. Irrigation heads, drip emitters and inline drip tubing shall be installed as indicated on the drawings.

B. Spacing of heads and inline drip tubing shall not exceed maximum indicated on the drawings.

C. Riser nipples shall be of the same size as the riser opening in the sprinkler body.

3.11 MISCELLANEOUS EQUIPMENT

A. Install assemblies specified herein according to the respective detail drawings or specifications, using best standard practices.

B. Quick coupler valves shall be set approximately 18 inches from walks, curbs, header boards, or paved areas where applicable.

C. Install devices such as flush valves, and air relief valves as indicated on the drawings and as recommended by the manufacturer.

3.12 FLUSHING THE SYSTEM

A. Prior to installation of irrigation heads, the valves shall be opened and a full head of water used to flush out the lines and risers.

B. Irrigation heads shall be installed after flushing the system has been completed.

3.13 ADJUSTING THE SYSTEM

A. Contractor shall adjust valves, align heads, and check the coverage of each system prior to coverage test.

B. If it is determined by the Design Consultant ~~or Owner's authorized representative~~ that additional adjustments or nozzle changes will be required to provide proper coverage, ~~all~~ necessary changes or adjustments shall be made prior to any planting.

C. The entire system shall be operating properly before any planting operations commence.

D. Automatic control valves are to be adjusted so that the irrigation heads, drip emitters and inline drip tubing operate at the pressure recommended by the manufacturer.

3.14 TESTING AND OBSERVATION

A. Do not allow or cause any of the work of this section to be covered up or enclosed until it has been observed, tested and accepted by the Design Consultant, City~~Owne~~r, and governing agencies.

B. The Contractor shall be solely responsible for notifying the Design Consultant, ~~Owner~~City, and governing agencies, a minimum of 48 hours in advance, where and when the work is ready for testing.

C. When the sprinkler system is completed, the Contractor shall perform a coverage test of each system in its entirety to determine if the water coverage for the planted areas is complete and adequate in the presence of the Design Consultant.

D. The Contractor shall furnish ~~all~~ materials and perform ~~all~~ work required to correct any inadequacies of coverage due to deviations from the plans, or where the system has been willfully installed as indicated on the drawings when it is obviously inadequate, without bringing this to the attention of the Design Consultant. This test shall be accepted by the Design Consultant and accomplished before starting any planting.

E. Areas to be maintained for the formal maintenance period shall start maintenance at the same time, as directed by the Design Consultant, ~~Owner~~City, and governing agencies. Partial areas will not be released into maintenance prior to completion of items listed in the pre-maintenance review. The maintenance period may not be phased.

F. Final inspection will not commence without record drawings as prepared by the Irrigation Contractor.

3.15 MAINTENANCE

During the maintenance period the Contractor shall adjust and maintain the irrigation system in a fully operational condition providing complete irrigation coverage to intended plantings.

3.16 COMPLETION CLEANING

Clean up shall be made as each portion of the work progresses. Refuse and excess dirt shall be removed from the site, walks and paving shall be swept, and any damage sustained on the work of others shall be repaired to original conditions.

END OF SECTION

SECTION 32 90 50 - LANDSCAPE BOULDERS

PART 1 - GENERAL

1.1 RELATED DOCUMENTS

A. Drawings and general provisions of the Contract, including General and Supplementary Conditions and Division 01 Specification Sections, apply to this Section.

1.2 SUMMARY

A. This Section includes the following:

1. Furnish and Install Landscape Boulders.

B. Related Sections include the following:

1. Section 01 10 10 - Sustainable Design Requirements.

2. Division 12 Section "Site Furnishings" for benches installed in boulders

3. Division 05 Section "Pipe and Tube Railings" for fabrication and installation requirements for pipe and tube railings.

4. Division 31 Section "Site Clearing" for removal limits of trees, shrubs, and other plantings affected by new construction.

5. Division 31 Section "Earth Moving" for building and utility trench excavation, backfilling, compacting and grading requirements, and soil materials.

6. Division 32 Section "Plants" and "Turf and Grasses" for coordination with adjacent planting areas.

7. Division 32 Section "Planting Irrigation" for coordination with adjacent irrigation systems.

8. Section 01 81 13, "SUSTAINABLE DESIGN REQUIREMENTS": LEED Requirements.

1.3 REFERENCES

A. US Green Building Council (USGBC), www.usgbc.org

1.4 SUBMITTALS

A. Product Data: For the following: Natural Landscape Boulders.

B. Samples for Initial Selection: Photographs of each rock type, as indicated on Drawings, label with ID number, approximate location off site, color and size range.

1. Provide photographs of a selection (50% more than number required) of boulders to choose from.

2. Submit rock types in one submittal.

3. Natural Landscape Boulders: Submit three photographs of each stone taken from different angles with name, size (height, width and length), color range and source. Tag each boulder and include boulder ID number in each photograph for identification purposes.

C. Shop Drawings showing spot elevations and locations of boulders including depth to be buried as appropriate.

D. Provide certification from rock quarry that stones – natural boulders, slab rocks, rip-rap broken stone used in rock landform and rock mulch - are purchased from a ~~SINGLE SOURCE SUPPLIER~~single source supplier. If more than one quarry is to be utilized, suppliers must have access to multiple quarries, stone approval from Design Consultant must be obtained prior to installation.

E. LEED certification product data as specified in Division 1, Section 01 81 13, "SUSTAINABLE DESIGN REQUIREMENTS", for the following LEED credits:

1. Credit MR 5.1 & 5.2, Regional Materials, Manufactured & Harvested / Extracted Locally

1.5 QUALITY ASSURANCE

A. ~~Installer~~ Contractor Qualifications: An experienced Contractor~~installer~~ who has completed landscape boulder installations similar in material, design, and extent to that indicated for this Project and whose work has resulted in construction with a record of successful in-service performance.

B. Source Limitations: Obtain each type of rock from one source with resources to provide materials and products of consistent quality in appearance and physical properties.

1.6 DELIVERY, STORAGE, AND HANDLING

A. Protect rock during storage and construction from mixing with earth or other materials.

B. Identify adequate location for sorting and storage of each rock type on site.

PART 2 - PRODUCTS

2.1 MATERIALS

A. Boulders

1. Landscape Boulders:
   a. Type and Size: Per drawings
   b. Acceptable Manufacturers:
      1) Decorative Stone Solutions (800) 699-1878
      2) KRC (760) 744-1035
      3) Southwest Boulder (800) 540-1147
      4) Or Equal

2. Landscape Flagstone:
   a. Type and Size: Per drawings
   b. Acceptable Manufacturers:
      1) Decorative Stone Solutions (800) 699-1878
      2) KRC (760) 744-1035
      3) Southwest Boulder (800) 540-1147

4) Or Equal

B. Quality Requirements: Visual evaluation of the quarry, including examination of samples, suitable tests and service records may be used to determine acceptability of the stone. The Contractor shall notify the Agency in writing of the intended source of stone at least 60 days prior to use.

2.2 CLEANING

A. Boulders and slab rocks shall be free of graffiti. Graffiti is defined as paint or indelible markers which mar the appearance of the boulders. If graffiti removal is required, contractor shall prepare a schedule of materials and methods for graffiti removal and proposed methods of protecting the site from chemical contamination. The schedule shall be submitted to the Engineer prior to proceeding with graffiti removal. The Contractor shall be responsible for the complete removal of graffiti during the contract and maintenance period under this item.

2.3 COLORS AND ROCK TYPE

A. As indicated on the Drawings.

PART 3 - EXECUTION

3.1 EXAMINATION

A. Examine areas indicated to receive landscape natural boulders or flagstone steppers with Contractor~~Installer~~ present, for compliance with requirements for installation tolerances and other conditions affecting performance. Proceed with installation only after unsatisfactory conditions have been corrected.

3.2 SUBGRADE PREPARATION

A. Prior to the placement of the landscape natural boulders, the subgrade surfaces shall be cut, filled, compacted, and graded to the lines and grades as shown on the project drawings. Subgrade surfaces shall be prepared so as to be reasonably smooth, and free of mounds, dips or windows.

B. The placement of fill to meet design grades and elevations shall be of an approved material and placement shall include adequate compaction of the materials.

C. No natural boulders shall be placed until the subgrade is inspected and approved by the ~~Owner's Authorized Representative~~design Consultant.

D. The Contractor shall provide for an adequate foundation under the natural boulders per the Drawings.

E. Boulder to be placed so a flat surface faces up with no protrusions facing vertically or rough edges exposed.

3.3 STONE PLACEMENT

A. No setting of boulders shall take place unless the Design Consultant is present on the site.

B. The locations of stones are designated in the Drawings; however the exact position of each stone shall be as directed by the Design Consultant.

C. The stone shall be placed by equipment on the surfaces and to the depths specified. The Stone shall be as to avoid displacement of the underlying subgrade or bedding aggregate.

3.4 EQUIPMENT PLACEMENT

A. Rock shall have a maximum contact between the individual rock, without bridging or otherwise creating a void under the stone. The rock shall be firmly bedded, and may be placed by hand or by machinery.

B. Contractor to take appropriate measures to avoid damage to the stone and pavement.

END OF SECTION

SECTION 32 92 00 - TURF AND GRASSES

PART 1 - GENERAL

1.1 RELATED DOCUMENTS

A. Drawings and general provisions of the Contract, including General and Supplementary Conditions and Division 01 Specification Sections, apply to this Section.

1.2 SUMMARY

A. Section Includes:
1. Sodding.
2. Turf renovation.
3. Erosion-control material(s).

B. Related Sections:

1. Division 31 Section "Site Clearing" for topsoil stripping and stockpiling.

2. Division 31 Section "Earth Moving" for excavation, filling and backfilling, and rough grading.

3. Division 32 Section "Planting Irrigation" for turf irrigation.

4. Division 32 Section "Plants" for border edgings.

5. Division 33 Section "Subdrainage" for subsurface drainage.

6. Section 01 81 13, “SUSTAINABLE DESIGN REQUIREMENTS”: LEED Requirements.

1.3 REFERENCES

A. US Green Building Council (USGBC), www.usgbc.org

1.4 DEFINITIONS

A. Duff Layer: The surface layer of native topsoil that is composed of mostly decayed leaves, twigs, and detritus.

B. Finish Grade: Elevation of finished surface of planting soil.

C. Manufactured Topsoil: Soil produced off-site by homogeneously blending mineral soils or sand with stabilized organic soil amendments to produce topsoil or planting soil.

D. Pesticide: A substance or mixture intended for preventing, destroying, repelling, or mitigating a pest. This includes insecticides, miticides, herbicides, fungicides, rodenticides, and molluscicides. It also includes substances or mixtures intended for use as a plant regulator, defoliant, or desiccant.

E. Pests: Living organisms that occur where they are not desired or that cause damage to plants, animals, or people. These include insects, mites, grubs, mollusks (snails and slugs), rodents (gophers, moles, and mice), unwanted plants (weeds), fungi, bacteria, and viruses.

F. Planting Soil: Standardized topsoil; existing, native surface topsoil; existing, in-place surface soil; imported topsoil; or manufactured topsoil that is modified with soil amendments and perhaps fertilizers to produce a soil mixture best for plant growth.

G. Subgrade: Surface or elevation of subsoil remaining after excavation is complete, or top surface of a fill or backfill before planting soil is placed.

H. Subsoil: Soil beneath the topsoil layer of the soil profile, and typified by the lack of organic matter and soil organisms.

I. Surface Soil: Soil that is present at the top layer of the existing soil profile at the Project site. In undisturbed areas, the surface soil is typically topsoil, but in disturbed areas such as urban environments, the surface soil can be subsoil.

1.5 SUBMITTALS

A. Product Data: For each type of product indicated.

1. Pesticides and Herbicides: Include product label and manufacturer's application instructions specific to this Project.

B. Certification of Grass Seed: From seed vendor for each grass-seed monostand or mixture stating the botanical and common name, percentage by weight of each species and variety, and percentage of purity, germination, and weed seed. Include the year of production and date of packaging.

1. Certification of each seed mixture for turfgrass sod. Include identification of source and name and telephone number of supplier.

C. Qualification Data: For qualified landscape Installer.

D. Product Certificates: For soil amendments and fertilizers, from manufacturer.

E. Material Test Reports: For existing in-place surface soil and imported or manufactured topsoil.

F. Maintenance Instructions: Recommended procedures to be established by ~~Owner~~ the Design Consultant for maintenance of turf during a calendar year. Submit before expiration of required initial maintenance periods.

G. LEED certification product data as specified in Division 1, Section 01 81 13, “SUSTAINABLE DESIGN REQUIREMENTS”, for the following LEED credits:

1. Credit MR 4.1 & 4.2, Recycled Content

2. Credit MR 5.1 & 5.2, Regional Materials, Manufactured & Harvested / Extracted Locally

1.6 QUALITY ASSURANCE

A. Installer Qualifications: A qualified landscape Installer whose work has resulted in successful turf establishment.

1. Professional Membership: Installer shall be a member in good standing of either the Professional Landcare Network or the American Nursery and Landscape Association.

2. Experience: Five years' experience in turf installation in addition to requirements in Division 01 Section "Quality Requirements."

3. Installer's Field Supervision: Require Installer to maintain an experienced full-time supervisor on Project site when work is in progress.

4. Personnel Certifications: Installer's field supervisor shall have certification in one the following categories from the Professional Landcare Network:

a. Certified Landscape Technician - Exterior, with installation specialty area(s), designated CLT-Exterior.

b. Certified Turfgrass Professional, designated CTP.

c. Certified Turfgrass Professional of Cool Season Lawns, designated CTP-CSL.

5. Maintenance Proximity: Not more than two hours' normal travel time from Installer's place of business to Project site.

6. Pesticide Applicator: State licensed, commercial.

B. Soil-Testing Laboratory Qualifications: An independent laboratory or university laboratory, recognized by the State Department of Agriculture, with the experience and capability to conduct the testing indicated and that specializes in types of tests to be performed.

C. Soil Analysis: For each unamended soil type, furnish soil analysis and a written report by a qualified soil-testing laboratory stating percentages of organic matter; gradation of sand, silt, and clay content; cation exchange capacity; deleterious material; pH; and mineral and plant-nutrient content of the soil.

1. Testing methods and written recommendations shall comply with USDA's Handbook No. 60.

2. The soil-testing laboratory shall oversee soil sampling, with depth, location, and number of samples to be taken per instructions from Design Consultant at locations identified on the plans.

3. Report suitability of tested soil for turf growth.

a. Based on the test results, state recommendations for soil treatments and soil amendments to be incorporated. State recommendations in weight per 1000 sq. ft. or volume per cu. yd. for nitrogen, phosphorus, and

potash nutrients and soil amendments to be added to produce satisfactory planting soil suitable for healthy, viable plants.

b. Report presence of problem salts, minerals, or heavy metals, including aluminum, arsenic, barium, cadmium, chromium, cobalt, lead, lithium, and vanadium. If such problem materials are present, provide additional recommendations for corrective action.

D. Preinstallation Conference: Conduct conference at Project site.

1.7 DELIVERY, STORAGE, AND HANDLING

A. Sod: Harvest, deliver, store, and handle sod according to requirements in "Specifications for Turfgrass Sod Materials" and "Specifications for Turfgrass Sod Transplanting and Installation" in TPI's "Guideline Specifications to Turfgrass Sodding." Deliver sod in time for planting within 24 hours of harvesting. Protect sod from breakage and drying.

B. Bulk Materials:

1. Do not dump or store bulk materials near structures, utilities, walkways and pavements, or on existing turf areas or plants.

2. Provide erosion-control measures to prevent erosion or displacement of bulk materials, discharge of soil-bearing water runoff, and airborne dust reaching adjacent properties, water conveyance systems, or walkways.

3. Accompany each delivery of bulk fertilizers, and soil amendments with appropriate certificates.

1.8 PROJECT CONDITIONS

A. Planting Restrictions: Plant during one of the following periods. Coordinate planting periods with initial maintenance periods to provide required maintenance from date of Substantial Completion.

B. Weather Limitations: Proceed with planting only when existing and forecasted weather conditions permit planting to be performed when beneficial and optimum results may be obtained. Apply products during favorable weather conditions according to manufacturer's written instructions.

1.9 MAINTENANCE SERVICE

A. Initial Turf Maintenance Service: Provide full maintenance by skilled employees of landscape Installer. Maintain as required in Part 3. Begin maintenance immediately after each area is planted and continue until acceptable turf is established but for not less than the following periods:

1. Sodded Turf: 180 days from date of Substantial Completion.

PART 2 - PRODUCTS

2.1 TURFGRASS SOD

A. Turfgrass Sod: Complying with "Specifications for Turfgrass Sod Materials" in TPI's "Guideline Specifications to Turfgrass Sodding." Furnish viable sod of uniform density, color, and texture, strongly rooted, and capable of vigorous growth and development when planted.

B. Turfgrass Species: As indicated on drawings

2.2 IMPORT TOPSOIL

A. Import topsoil to be used on-grade as required for fill operations or as specified in the drawings.

B. Silt plus clay content of the import soil shall not exceed 20% by weight with a minimum 95% passing the 2.0 millimeter sieve. The sodium absorption rate (SAR) shall not exceed 6 and the electrical conductivity (ECe) of the saturation extract of this soil shall not exceed 3.0 millimhos per centimeter at 25 degrees centigrade. The boron content shall be no greater than 1 part per million as measured on the saturation extract. Submit results of agricultural soils analysis for review and approval by the ~~Owner's Representative.~~Design Consultant.

C. Topsoil: ASTM D 5268, pH range of 5.5 to 7, a minimum of 2 percent organic material content; free of stones 1 inch or larger in dimension and other extraneous materials harmful to plant growth.

2.3 INORGANIC SOIL AMENDMENTS

A. Soil amendments will vary depending on the results of soil testing.

B. Sulfur: Granular, biodegradable, containing a minimum of 90 percent sulfur, and with a minimum of 99 percent passing through No. 6 sieve and a maximum of 10 percent passing through No. 40 sieve.

C. Iron Sulfate: Granulated ferrous sulfate containing a minimum of 20 percent iron and 10 percent sulfur.

D. Aluminum Sulfate: Commercial grade, unadulterated.

E. Agricultural Gypsum: Minimum 90 percent calcium sulfate, finely ground with 90 percent passing through No. 50 sieve.

2.4 ORGANIC SOIL AMENDMENTS

A. Organic Soil Amendment:

1. A blend of organic fractions with several degrees of breakdown rate, a long-lasting form of iron, trace elements, pH of 5.5 to 7.5, maximum salinity of 2.50 ECe, organic matter (dry weight basis) more than 90%, non-ionic wetting agent and total nitrogen content of 0.4 – 0.8% ("Numex Lif" by John Deere Landscape (800) 233-6933, or "A-1 Nutri-Gro" by Hanson Aggregates/A-1 Soils or as indicated on the Drawings.

2.5 FERTILIZER

A. Pre-plant Fertilizer:

1. Gro-Power Plus 5-3-1,or equal, Soil Penetrant Added (1.00% Alkyl Naphthalene Sodium Sulfonate.) Fertilizer and soil conditioner from organic materials, higher plant form life, composted below the fibrous stage to support bacterial cultures. Shall not contain poultry, animal or human waste. As manufactured by Gro-Power®, Inc. (800) 473-1307, or equal.

2. Physical properties: A uniform "Beaded" homogenous mixture - 100.00% passing through a #4 mesh screen - a water soluble bio-degradable binder is used to insure fast breakdown.

3. Chemical Analysis: 5-3-1, nitrogen (available) 5.00%, phosphate 3.00%, potash 1.00% humus 70.00%, humic acids 15.00% soil penetrant 1.00%. Gro-Power bacterial "stimulator" included -bacteria (common soil and airborne organisms - aerobic, anaerobic,) yeast and mold, minimum 60,000 per 100 gram.

Nitrogen	5%	minimum
Phosphoric Acid	3%	minimum
Soluble Potash	1%	minimum

B. Lawn Post-plant Fertilizer:

1. Gro-Power Premium High Nitrogen 18-3-7 NPK analysis, with 40% of the nitrogen a slow release SCU. 20% humus, 4% humic Acids, 4% sulfur, 1% iron, 0.50% soil penetrant, and soil enhancers. Nitrogen source: 5.94% Ammoniacal Nitrogen, 4.86% Nitrate Nitrogen, 5.40% Sulphur Coated Slow-Release Nitrogen, 1.08% Urea Nitrogen. Gro-Power bacterial "stimulator" included -bacteria (common soil and airborne organisms - aerobic, anaerobic,) yeast and mold, minimum 60,000 per 100 gram. As manufactured by Gro-Power®, Inc. (800) 473-1307, or equal.

Nitrogen	18%	minimum
Phosphoric Acid	3%	minimum
Soluble Potash	7%	minimum

C. Planting Tablets:

1. Tightly compressed chip type commercial grade planting tablets, and containing the following available percentages by weight of plant food:

Nitrogen	20%	minimum
Phosphoric Acid	10%	minimum
Potash	5%	minimum

2. Mycorrhizal Inoculum / Soil Conditioner: Inculum shall be both Endo and Ecto (granular), with consititing of propagules (spores, fragments of fungal mycelium, and pieces of mycorrhizal roots capable of colonizing host plant roots) of the vesicular arbuscular mycorrhizal species Glomus intraradices, Glomus aggregatum, Glomus mosseae, combined with other species and/or additional genera including, Sclerocyctis, Gigaspora, Scutellospora, Entrophospora, and Acaulospora. Ectomycorrhiza include Pisolithus and 4 species of Rhizopogon. Soil Conditioner portion shall consist of organic materials

consisting of higher plant form life, composted beyond the fiberous stage, to humus. Also shall have humic acids and beneficial soil bacteria strains. It shall NOT contain poultry, animal or human waste (i.e., sewage sludge), pathogenic viruses, fly larvae, insecticides, herbicides, fungicide or poisonous chemicals that would inhibit plant growth. Shall be "GroLife" (800) 473-1307, or equal.

Ingredients	percentage (minimum)
Mycorrhizal Inoculum	6,500/55,00 progagules per lb.*
Humus	65%
Humic Acids	25%

2.6 EROSION-CONTROL MATERIALS

D. Erosion-Control Blankets: Biodegradable wood excelsior, straw, or coconut-fiber mat enclosed in a photodegradable plastic mesh. Include manufacturer's recommended steel wire staples, 6 inches long.

E. Erosion-Control Fiber Mesh: Jute mesh shall be new and shall be of a uniform, open, plain-weave mesh. The mesh shall be made from unbleached single jute yarn. The yarn shall be of loosely twisted construction and shall not vary in thickness by more than half its normal diameter. Jute mesh shall be furnished in rolled strips and shall conform to the following provisions:

1. Width - 1200 mm {48 inches}, with a tolerance of ± 25 mm {± one inch}.

2. Warp ends - 78, minimum, per width.

3. Weft ends - 44, minimum, per meter {yard}.

4. Mass - 0.57 to 0.63-kg/m {1.16 to 1.28 pounds per yard}.

2.7 MISCELLANEOUS PRODUCTS

F. Prior to using herbicides, contractor shall review procedures with the ~~Owner's Representative~~Design Consultant and obtain written approval. A contractor licensed by the County shall perform herbicide applications requiring government or agency approvals.

G. Selective Herbicides: EPA registered and approved, of type recommended by manufacturer for application.

H. Pre-emergent herbicide shall be Treflan, Surfland, Eptan, or equal.

PART 3 - EXECUTION

3.1 EXAMINATION

A. Examine areas to be planted for compliance with requirements and other conditions affecting performance.

1. Verify that no foreign or deleterious material or liquid such as paint, paint washout, concrete slurry, concrete layers or chunks, cement, plaster, oils,

gasoline, diesel fuel, paint thinner, turpentine, tar, roofing compound, or acid has been deposited in soil within a planting area.

2. Do not mix or place soils and soil amendments in frozen, wet, or muddy conditions.

3. Suspend soil spreading, grading, and tilling operations during periods of excessive soil moisture until the moisture content reaches acceptable levels to attain the required results.

4. Uniformly moisten excessively dry soil that is not workable and which is too dusty.

B. Proceed with installation only after unsatisfactory conditions have been corrected.

C. If contamination by foreign or deleterious material or liquid is present in soil within a planting area, remove the soil and contamination as directed by ~~Architect~~ Design Consultant and replace with new planting soil.

3.2 PREPARATION

A. Protect structures, utilities, sidewalks, pavements, and other facilities, trees, shrubs, and plantings from damage caused by planting operations.

1. Protect grade stakes set by others until directed to remove them.

B. Install erosion-control measures to prevent erosion or displacement of soils and discharge of soil-bearing water runoff or airborne dust to adjacent properties and walkways.

3.3 TURF AREA PREPARATION

A. Limit turf subgrade preparation to areas to be planted.

B. Newly Graded Subgrades: Loosen subgrade to a minimum depth of 6 inches. Remove stones larger than 1 inch in dimension and sticks, roots, rubbish, and other extraneous matter and legally dispose of them off ~~Owner's~~ City's property.

1. Spread soil conditioner, gypsum and other amendments over planting areas indicated on the Drawings, and mechanically till and blend to a depth of 6 inches.

2. Prepare areas within the dripline of existing trees by hand, do not use mechanical tillers. Rake smooth, lightly water, and compact to the finish grades shown on the Drawings. Use the amendments listed below for bidding purposes only. Materials and application rates may be modified after receipt of soils tests.

3. Use the amendments listed below for bidding purposes only. Materials and application rates may be modified after receipt of soils tests.

a. Soil Conditioner 6 cubic yards/ 1000s.f.
b. Gypsum 100 lbs/ 1000s.f.
c. Pre-Plant Fertilizer 5-3-1/ 150 lbs. / 1000s.f.
d. Soil Sulfur 10 lbs. / 1000s.f.
e. Mycorrhizal Inoculum / Soil Conditioner 20 lbs. / 1000s.f.

4. Delay mixing fertilizer with planting soil if planting will not proceed within a few days.

5. Thoroughly blend planting soil mix off-site before spreading, apply soil amendments on surface, and thoroughly blend planting soil mix.

6. Spread planting soil mix to a depth of 4 inches but not less than required to meet finish grades after light rolling and natural settlement. Do not spread if planting soil or subgrade is, muddy, or excessively wet.
   a. Spread approximately one-half the thickness of planting soil mix over loosened subgrade. Mix thoroughly into top 2 inchesof subgrade. Spread remainder of planting soil mix.
   b. Rake smooth and roll the area to compact and expose soil depressions or surface irregularities. Re-grade as necessary to achieve the finish grades indicated on the Drawings less the depth of the sod.
   c. For turfgrass only: Irrigate the area to thoroughly moisten soil and evenly broadcast the turf fertilizer (16-20-0) at the rate of one pound per 100 square feet, rake in lightly to a depth of 1”.

3.4 SODDING

A. Lay sod within 24 hours of harvesting. Do not lay sod if dormant or if ground is frozen or muddy.

B. Lay sod to form a solid mass with tightly fitted joints. Butt ends and sides of sod; do not stretch or overlap. Stagger sod strips or pads to offset joints in adjacent courses. Avoid damage to subgrade or sod during installation. Tamp and roll lightly to ensure contact with subgrade, eliminate air pockets, and form a smooth surface. Work sifted soil or fine sand into minor cracks between pieces of sod; remove excess to avoid smothering sod and adjacent grass.

   1. Lay sod across angle of slopes exceeding 1:3.

   2. Anchor sod on slopes exceeding 1:6 with wood peg] spaced as recommended by sod manufacturer but not less than 2 anchors per sod strip to prevent slippage.

C. Saturate sod with fine water spray within two hours of planting. During first week after planting, water daily or more frequently as necessary to maintain moist soil to a minimum depth of 1-1/2 inches below sod.

3.5 TURF RENOVATION

A. Renovate existing turf.

B. Renovate existing turf damaged by Contractor's operations, such as storage of materials or equipment and movement of vehicles.

   1. Reestablish turf where settlement or washouts occur or where minor regrading is required.

   2. Install new planting soil as required.

C. Remove sod and vegetation from diseased or unsatisfactory turf areas; do not bury in soil.

D. Remove topsoil containing foreign materials such as oil drippings, fuel spills, stones, gravel, and other construction materials resulting from Contractor's operations, and replace with new planting soil.

E. Mow, dethatch, core aerate, and rake existing turf.

F. Remove weeds before seeding. Where weeds are extensive, apply selective herbicides as required. Do not use pre-emergence herbicides.

G. Remove waste and foreign materials, including weeds, soil cores, grass, vegetation, and turf, and legally dispose of them off ~~Owner's~~ City's property.

H. Till stripped, bare, and compacted areas thoroughly to a soil depth of 6 inches

I. Apply soil amendments and initial fertilizers required for establishing new turf and mix thoroughly into top 6 inches of existing soil. Install new planting soil to fill low spots and meet finish grades.

J. Water newly planted areas and keep moist until new turf is established.

3.6 TURF MAINTENANCE

A. Maintenance of turf areas includes proper watering and soil moisture content, fertilizing, mulching, cutting, rolling, pest and disease control, reseeding and other functions necessary to maintain a healthy, vigorous growing lawn. Maintenance will continue until lawn areas have a complete established close stand of grass.

B. Maintenance Schedules: Provide complete maintenance specifications including general design maintenance intent of plant material and fertilizing schedule based on planting design.

3.7 CLEANUP AND PROTECTION

A. As the work progresses, maintain areas in a neat, clean, orderly manner, and remove unsightly debris as necessary. At the completion of the work, sweep and clean walks, parking and other paved areas adjacent to plantings.

B. During planting, keep adjacent paving and construction clean and work area in an orderly condition. Promptly remove soil and debris created by lawn work from paved areas. Clean wheels of vehicles before leaving site to avoid tracking soil onto roads, walks, or other paved areas.

C. Protect plants, lawns from damage due to landscape operations, operations by other contractors and trades, and others. Maintain protection during installation and maintenance periods. Treat, repair, or replace damaged exterior planting.

D. Erect barricades and warning signs as required to protect newly planted areas from traffic. Maintain barricades throughout maintenance period and remove after lawn is established.

E. Remove erosion-control measures after grass establishment period.

END OF SECTION

SECTION 32 93 00 - PLANTS

PART 1 - GENERAL

1.1 RELATED DOCUMENTS

A. Drawings and general provisions of the Contract, including General and Supplementary Conditions and Division 01 Specification Sections, apply to this Section.

1.2 SUMMARY

A. Section Includes:
1. Plants.
2. Planting soils and soil amendments
3. Landscape Mulches
4. Tree stabilization.
5. Landscape edgings.
6. Tree grates.

B. Related Sections:

1. Division 01 Section "Temporary Tree and Plant Protection" for protecting, trimming, pruning, repairing, and replacing existing trees to remain that interfere with, or are affected by, execution of the Work.

2. Division 31 Section "Site Clearing" for protection of existing trees and plantings, topsoil stripping and stockpiling, and site clearing.

3. Division 31 Section "Earth Moving" for excavation, filling, and rough grading and for subsurface aggregate drainage and drainage backfill materials.

4. Division 32 Section "Turf and Grasses" for turf (lawn) and meadow planting, hydroseeding, and erosion-control materials.

5. Division 32 Section "Stainless Steel Trellis System" for below-grade drainage of landscaped areas, paved areas, and wall perimeters.

6. Division 32 Section "Planting Irrigations" for planting irrigation sytems.

7. Division 33 Section "Subdrainage" for below-grade drainage of landscaped areas, paved areas, and wall perimeters.

8. Section 01 81 13, “SUSTAINABLE DESIGN REQUIREMENTS”: LEED Requirements.

1.3 REFERENCES

A. US Green Building Council (USGBC), www.usgbc.org

1.4 DEFINITIONS

A. Backfill: The earth used to replace or the act of replacing earth in an excavation.

B. Brown Trunk Height: (BTH) Indicating the height of palm trees. The Brown trunk height shall be measured from the ground line to the base of the heart leaf or emerging leaf bud.

C. Container-Grown Stock: Healthy, vigorous, well-rooted plants grown in a container, with a well-established root system reaching sides of container and maintaining a firm ball when removed from container. Container shall be rigid enough to hold ball shape and protect root mass during shipping and be sized according to ANSI Z60.1 for type and size of plant required.

D. Date of Acceptance: Date at the end of the warranty periods (as specified herein) when written acceptance is provided by the ~~Owner~~Design Consultant.

E. Duff Layer: The surface layer of native topsoil that is composed of mostly decayed leaves, twigs, and detritus.

F. Finish Grade: Elevation of finished surface of planting soil (not mulch) within 1/10th of an inch. Unless other wise noted soil finish shall be:

1. 2 ½" below hardscape /pavement areas

2. 5" below topcut curb or planter wall

3. 1" below hardscape/ pavement areas (at lawn assembly)

G. Manufactured or Import Topsoil: Soil produced off-site by homogeneously blending mineral soils or sand with stabilized organic soil amendments to produce topsoil or planting soil.

H. Native Planting Areas: Areas to be planted with California Native Plants or covered with mulches not intended for pedestrian or vehicular circulation. Native Planting areas will require special soil preparation and planting procedures to create the ecology necessary for Native Plantings.

I. Native Soil: Existing soil found in place on the site. Soil is defined as the unconsolidated mineral or organic matter on the immediate surface of the earth which serves as a natural medium for the growth of plants.

J. Notice of Completion: The date at the close of the Maintenance Period when the work has been completed, checked, accepted and written approval of the work has been given by the Design Consultant.

K. Pesticide: A substance or mixture intended for preventing, destroying, repelling, or mitigating a pest. This includes insecticides, miticides, herbicides, fungicides, rodenticides, and molluscicides. It also includes substances or mixtures intended for use as a plant regulator, defoliant, or desiccant.

L. Pests: Living organisms that occur where they are not desired, or that cause damage to plants, animals, or people. These include insects, mites, grubs, mollusks (snails and slugs), rodents (gophers, moles, and mice), unwanted plants (weeds), fungi, bacteria, and viruses.

M. Planting Area: Areas to be planted or covered with mulches not intended for pedestrian or vehicular circulation.

N. Planting Soil: Existing, in-place surface soil or imported topsoil that is modified with soil amendments and fertilizers per the specifications to produce a soil mixture best for plant growth.

O. Plant; Plants; Plant Material: These terms refer to vegetation in general, including trees, shrubs, vines, ground covers, ornamental grasses, bulbs, corms, tubers, or herbaceous vegetation.

P. Raised Planter: Planted areas that are bounded by wall or curb 12” or higher than the adjacent grade or surface. To be filled with import topsoil to the full and complete depth of the planter.

Q. Root Flare: Also called "trunk flare." The area at the base of the plant's stem or trunk where the stem or trunk broadens to form roots; the area of transition between the root system and the stem or trunk.

R. Stem Girdling Roots: Roots that encircle the stems (trunks) of trees below the soil surface.

S. Subgrade: Surface or elevation of subsoil remaining after excavation is complete, or the top surface of a fill or backfill before planting soil is placed.

T. To Remain: Planting areas identified in the Drawings to be protected and maintained in place.

1.5 SUBMITTALS

A. Submittals for items shall be made in one package. If submittals are judged incomplete or non-responsive to the directions of the Design Consultant after three submittals, the Contractor shall be back-charged for the Design Consultant’s costs to process additional Submittals.

B. Submittals will be rejected without the benefit of review by the Design Consultant if they are difficult to read, incomplete or if the required information in not presented in format required.

C. Product Data:

1. For each type of product listed in Part 2 of this specification.

2. Plant Materials: Include quantities, sizes, quality, and nursery sources for plant materials.

3. Pesticides and Herbicides: Include product label and manufacturer's application instructions specific to the Project.

4. Plant Photographs: For each plant specified, include photo quality color photographs at 8 ½ x11 size format of each required species and size of plant material as it will be furnished to the Project. Take photographs from an angle depicting true size and condition of the typical plant to be furnished. Include a scale rod or other measuring device in each photograph. Include a minimum of

three photographs of each species. Identify each photograph with the full scientific name of the plant, container size, height and spread, and name of the growing nursery. Review of plant photographs does not indicate acceptance of the plant material as delivered to the Project Site.

5. Palm Trees: Submit photos as noted above. Submit documentation from each nursery certifying that the trees have been inspected by a county or state agricultural agency within the last 3 months, the trees are disease and pest free and are available for sale.

6. Planting Schedule: Submit anticipated planting dates for each type of planting.

7. Delivery Slips for products included in submittal, slips should indicate quantity delivered.

D. Samples for Verification: For each of the following:

1. Organic Mulch: ¼ lb bagged samples of each organic mulch required; in sealed plastic bags labeled with composition of materials by percentage of weight and source of mulch. Each Sample shall be typical of the lot of material to be furnished; provide an accurate representation of color, texture, and organic makeup.

2. Mineral Mulch: 1 lb bagged sample of each mineral mulch required, in sealed plastic bags labeled with source of mulch. Sample shall be typical of the lot of material to be delivered and installed on the site; provide an accurate indication of name, source, size, and color range of the material.

3. Stone 1”-3” diameter: Submit nine stones for each type and/or size range. Label shipping container with an accurate indication of name, source, size and color range of the material.

4. Stone 3”-8” diameter: Submit three stones for each type and/or size range. Label shipping container with an accurate indication of name, source, size and color range of the material.

5. Stone over 8” diameter: Submit three photo quality color images at 8 ½ x11 size format of each required stone. Label each image with an accurate indication of name, source, size and color range of the material.

6. Edging Materials and Accessories: Manufacturer's standard size, to verify color selected.

E. Qualification Data: For qualified ~~Landscape~~ Contractor~~Installer and qualified Native Plantings Landscape Subcontractor (if applicable)~~. Include list of similar projects completed by ~~Installer~~ Contractor demonstrating Contractor~~Installer~~'s capabilities and experience. Include project names, addresses, and year completed, and include names and addresses of owners/ contact persons. Refer to the “Quality Assurance” section Part 1 of this specification for additional information.

~~F. Material Test Reports:~~

~~1. For Phoenix species and Washingtonia filifera Palm Trees: Submit written certification from an independent certified arborist that each palm has been~~

~~visually inspected for disease. The arborist shall collect tissue samples for each of the proposed palms specimens to be tested by a qualified plant laboratory for known palm diseases including *Fusarium oxysporum* and *Gliocladium vermoeseni*. Sample results shall be listed by individual palm tree for verification by the Design Consultant.~~

~~2.~~1. Soil Analysis Test Reports: Testing for planting soils including import Topsoil and existing or stockpiled soil to be used during backfill operations. Refer to Soil Testing section in Part 3 testing procedures. Soil testing shall be completed after rough grading operations. See Part 1 Quality Assurance for additional requirements.

~~3.~~2. Percolation Test Reports: Refer to Percolation Testing section in Part 3 for testing procedures. The results of the percolation testing must be submitted to the Design Consultant for review and approval.

~~G.~~F. Maintenance Instructions: Contractor shall furnish ~~to the Owner recommended procedures to be established by Owner~~ for maintenance of plants during a calendar year. Submit before start of required maintenance periods.

1. Instructions should include but not be limited to the following tasks: Fertilizing, irrigation schedule, dead heading, mulch or other inert groundcover replenishment, pruning of shrubs to maintain design intent and 3 year tree maintenance schedule.

2. Instructions shall be submitted to Design Consultant for approval before submittal to the ~~Owner~~ City and prior to the expiration of the Maintenance period.

~~H.~~G. Landscape Planting Plan As built Drawings Contractor mark ups: Identifying changes to Contract Documents~~.~~

~~I.~~H. Warranty: Submit written warranties on the Contractor's or subcontractor's letterhead, addressed to the ~~Owner~~City. Submit warranties in duplicate and in the form shown in the General Conditions, or modified as approved by the Design Consultant to suit the conditions pertaining to the warranty. Refer to Warranty and Replacement section, Part 1 for more information.

~~J.~~I. LEED certification product data as specified in Division 1, Section 01 81 13, "SUSTAINABLE DESIGN REQUIREMENTS", for the following LEED credits:

1. Credit MR 4.1 & 4.2, Recycled Content

2. Credit MR 5.1 & 5.2, Regional Materials, Manufactured & Harvested / Extracted Locally

1.6 QUALITY ASSURANCE

A. ~~Installer~~ Contractor Qualifications: A qualified ~~landscape Installer~~Contractor whose work has resulted in successful establishment of plants.

1. Work shall be performed by a trained crew in accordance with the standards and practices related to the trade.

2. Professional Membership: ~~Installer~~ Contractor shall be a member in good standing of either the Professional Landcare Network or the American Nursery and Landscape Association.

3. Experience: Five years' experience in landscape installation in addition to requirements in Division 01 Section "Quality Requirements." Provide client list with contact names, phone numbers and date planting was installed.

4. License: Single entity ~~subcontractor~~ Contractor holding a valid C-27 California Contractor's license.

5. Contractor~~Installer~~'s Field Supervision: Require ~~Installer~~ Contractor to maintain an experienced full-time supervisor on Project site when work is in progress.

6. Personnel Certifications: Contractor~~Installer~~'s field supervisor shall have certification in one of the following categories from the Professional Landcare Network:

a. Certified Landscape Technician - Exterior, with installation, maintenance and irrigation specialty area(s).

b. Certified Ornamental Landscape Professional, designated COLP.

7. Pesticide Applicator: State licensed, commercial.

B. Soil and Plant-Testing Laboratory Qualifications: An independent or university laboratory, recognized by the State Department of Agriculture, with the experience and capability to conduct the testing indicated and that specializes in types of tests to be performed.

1. Provide testing by one of the following or a comparable testing laboratory:

a. John Deere Landscapes

b. Soil and Plant Laboratory

c. Wallace Laboratories

C. Soil Analysis Testing: For each unamended soil type, furnish soil analysis and a written report by a qualified soil-testing laboratory stating percentages of organic matter; gradation of sand, silt, and clay content; cation exchange capacity; sodium absorption ratio (SAR), electrical conductivity (ECe), boron content, deleterious material; pH; and mineral and plant-nutrient content of the soil.

1. Supply Testing Agency with a complete copy of this specification and a copy of the project plant list and planting plan at the time of the soil testing.

2. Testing methods and written recommendations shall comply with USDA's Handbook No. 60.

3. The soil-testing laboratory shall oversee soil sampling at the conclusion of rough grading operations; with depth, location, and number of samples to be taken per instructions from Design Consultant. A minimum of five representative samples

(or as listed in the Drawings) shall be taken from varied locations for each soil to be used or amended for planting purposes.

4. No amendments shall be applied prior to receipt of test results.

5. Report suitability of tested soil for plant growth.

   a. Based upon the test results, state recommendations for soil treatments and soil amendments to be incorporated. State recommendations in weight per 1000 sq. ft. (92.9 sq. m) or volume per cu. yd. (0.76 cu. m) for recommended quantities of soil amendments and fertilizers listed in the specifications to produce satisfactory planting soil suitable for healthy, viable plants.

   b. Testing Agency recommendations must use the soil amendments and fertilizers listed in the specifications in their recommendations.

   c. Report presence of problem salts, minerals, or heavy metals, including aluminum, arsenic, barium, cadmium, chromium, cobalt, lead, lithium, and vanadium. If such problem materials are present, provide additional recommendations for corrective action.

   d. If corrective measures are specified, provide retesting of soils after measures are corrected to confirm soils were successfully abated. Costs for soil testing and retesting after corrective measures are completed shall be including in the base bid price.

6. The Design Consultant shall recommend all changes to the amendments listed after review of the test results. Cost change for soil preparation shall be in accordance with the provisions in the General Conditions. Amounts of amendments listed in Part 3 shall be used for bidding purposes.

D. Provide quality, size, genus, species, and variety of plants indicated, complying with applicable requirements in ANSI Z60.1.

E. Measurements: Measure according to ANSI Z60.1. Do not prune to obtain required sizes.

1. Trees and Shrubs: Measure with branches and trunks or canes in their normal position. Take height measurements from or near the top of the root flare for field-grown stock and container grown stock. Measure main body of tree or shrub for height and spread; do not measure branches or roots tip to tip.

2. Other Plants: Measure with stems, petioles, and foliage in their normal position.

F. Plant Material Observation: Design Consultant may elect to observe plant material either at place of growth or at site before planting for compliance with requirements for genus, species, variety, cultivar, size, and quality. Design ~~Consutlant~~Consultant retains right to observe trees and shrubs further for size and condition of balls and root systems, pests, disease symptoms, injuries, and latent defects and to reject unsatisfactory or defective material at during progress of work. Remove rejected trees or shrubs immediately from Project site.

1. Notify Design Consultant of sources of planting materials fourteen days in advance of delivery to site.

G. Preinstallation Conference: Conduct conference at Project site with the Design Consultant, Contractor and ~~Landscape subcontractor~~Contractor to review requirements.

1. Meeting minutes from the preinstallation conference shall be the responsibility of the Contractor and shall be distributed to the parties in attendance for review and subsequent approval of conference discussion items.

2. Discussion agenda items during the pre-installation shall include the Contractor's understanding and familiarity with the following:

a. Protection of existing trees and landscape areas

b. Contract grown plant material

c. Site materials and finishes

d. Required submittals, samples and mock-ups.

e. Preparation and criteria for generation of the punch list, determination of Notice of Completion and Date of Acceptance.

f. Soil testing and percolation testing

g. Procedures protocol for site construction observation visits.

1.7 DELIVERY, STORAGE, AND HANDLING

A. Packaged Materials: Deliver packaged materials in original, unopened containers showing weight, certified analysis, name and address of manufacturer, and indication of conformance with state and federal laws if applicable.

B. Bulk Materials:

1. Do not dump or store bulk materials near structures, utilities, walkways and pavements, or on existing turf areas or plants or within driplines of existing trees.

2. Provide erosion-control measures to prevent erosion or displacement of bulk materials, discharge of soil-bearing water runoff, and airborne dust reaching adjacent properties, water conveyance systems, or walkways.

3. Accompany each delivery of bulk fertilizers and soil amendments with appropriate certificates.

C. Do not prune trees and shrubs before delivery. Protect bark, branches, and root systems from sun scald, drying, wind burn, sweating, whipping, and other handling and tying damage. Do not bend or bind-tie trees or shrubs in such a manner as to destroy their natural shape. Provide protective covering of plants during shipping and delivery. Do not drop plants during delivery and handling.

D. Handle planting stock by root ball.

E. Store bulbs, corms, and tubers in a dry place at 60 to 65 deg F (16 to 18 deg C) until planting.

F. Deliver plants after preparations for planting have been completed, and install immediately. If planting is delayed more than six hours after delivery, set plants and trees in their appropriate aspect (sun, filtered sun, or shade), protect from weather and mechanical damage, and keep roots moist.

1. Plants shall not be allowed to remain on site longer than 5 days prior to planting.

2. Do not remove container-grown stock from containers before time of planting.

3. Water root systems of plants stored on-site deeply and thoroughly with a fine-mist spray. Water as often as necessary to maintain root systems in a moist, but not overly-wet condition.

1.8 PROJECT CONDITIONS

A. Field Measurements: Prior to excavation for planting or placing of plant materials, verify actual grade elevations, service and utility locations, underground and overhead lines, irrigation system components, and dimensions of plantings and construction contiguous with new plantings by field measurements before proceeding with planting work. In the vent of a conflict the Contractor shall notify the Design Consultant ~~and the owner~~.

B. Interruption of Existing Services or Utilities: Do not interrupt services or utilities to facilities occupied by ~~Owner~~ the City or others unless permitted under the following conditions and then only after arranging to provide temporary services or utilities according to requirements indicated:

1. Notify ~~Owner~~ the City no fewer than two days in advance of proposed interruption of each service or utility.

2. Do not proceed with interruption of services or utilities without ~~Owner's~~ the City's written permission.

C. Weather Limitations: Proceed with planting only when existing and forecasted weather conditions permit planting to be performed when beneficial and optimum results may be obtained. Apply products during favorable weather conditions according to manufacturer's written instructions and warranty requirements.

D. Site Draining: Established site drainage shall be maintained by the Contractor during phase of the Work. Grade areas as needed to insure proper grades and drainage as indicated on Drawings. Final finish grade shall insure positive drainage with surface drainage away from buildings, walls and toward driveways, drainlets and catch basins.

E. Errors and Omission: Refer to errors and/or discrepancies in or between plans, specifications, lists or notes to the Design Consultant for adjustments before proceeding with the Work. The Contractor shall assume responsibility for proceeding with the Work without referring. In the event of a conflict, the Design Consultant shall interpret the meaning of the Contract Drawings and Contract Specifications and their decision shall be final.

F. Excavation: When conditions detrimental to plant growth are encountered such as rubble fill, adverse drainage conditions or obstructions, cease planting operations and notify the Design Consultant for further direction.

G. Coordination with Turf Areas (Lawns): Plant trees, shrubs, and other plants after finish grades are established and before planting turf areas unless otherwise indicated.

1. When planting trees, shrubs, and other plants after planting turf areas, protect turf areas, and promptly repair damage caused by planting operations.

1.9 WARRANTY

A. Special Warranty: ~~Installer~~ Contractor agrees to repair or replace plantings and accessories that fail in materials, workmanship, or growth within specified warranty period.

1. Failures include, but are not limited to, the following:

a. Death and unsatisfactory growth, except for defects resulting from incidents that are beyond Contractor's control.

b. Structural failures including plantings falling or blowing over.

c. Faulty performance of tree stabilization, edgings, ~~-~~tree grates, improper planting, and failure to water sufficiently.

d. Deterioration of metals, metal finishes, and other materials beyond normal weathering.

e. Damages done to plant material during construction.

2. Warranty Periods from Date of Notice of Completion:

a. New Trees: : 12 months~~,~~

b. Relocated Trees: 36 months

~~b.~~c. Shrubs, Vines, and Ornamental Grasses: ~~12~~ 6 months

~~c.~~d. Ground Covers, Biennials, Perennials, and Other Plants: 6 months.

~~d. Specialty Plants (succulents, tropical plants, bamboo): 24 months~~

~~e. Palms and palm like plants: 24 months~~

~~f. Native Plantings: 30 months~~

3. Include the following remedial actions as a minimum:

a. Immediately remove dead plants within 14 days and replace unless required to plant in the succeeding planting season.

b. Replace plants that are more than 25 percent dead or in an unhealthy condition at end of warranty period.

c. Replacement plants shall be of the same size, species and variety as specified in the Drawings. Replacement includes restoration of surrounding area to match the existing conditions.

d. Provide extended warranty for period equal to original warranty period, for replaced plant material.

1.10 MAINTENANCE SERVICE

A. Initial Maintenance Service for Trees and Shrubs: Provide maintenance by skilled employees of landscape Contractor~~Installer~~. Maintain as required in Part 3. Begin maintenance immediately after plants are installed and continue until plantings are acceptably healthy and well established but for not less than maintenance period below.

1. Maintenance Period: 180 days from date of Notice of Completion.

B. Within one week, prior to authorization start of maintenance, submit a Maintenance Schedule to the Design Consultant listing the days when maintenance crews will be on site. Include a contact person and emergency phone number.

C. The maintenance period shall be extended when in the opinion of the Design Consultant, dead or dying plant materials, poor or unhealthy growing conditions or improper maintenance practices are evident within the maintenance period. The extended period shall be provided at no additional cost to the ~~Owner~~ City and shall be extended until the work is complete and acceptable to the Design Consultant.

1.11 REJECTION AND SUBSTITUTION

A. Products or materials, whether installed or not, not conforming to the requirements herein specified shall be considered defective, and be marked as rejected. Materials shall be removed and replaced with approved materials at no additional cost to the ~~Owner~~City.

B. Submit written request for each proposed substitution. Provide data substantiating the request as well as a Certificate of Suitability certifying that the proposed substitution is equal or better in respects to that specified and that it will perform the function for which it is intended. Include with request required samples.

1.12 SITE OBSERVATIONS

A. Schedule and coordinate site observation visits for the following construction activities. Reviews shall be performed by the Design Consultant an notification shall be given in advance notice as noted:

	Item	Advance Notice
1.	Protection of existing plant materials	48 hours
2.	Rough grade	48 hours
3.	Soil preparation and finish grade	48 hours
4.	Inspection of plant material delivered on site.	48 hours
5.	Spotting of Trees prior to excavation of planting holes	48 hours
6.	Plant material review	48 hours
7.	Plant layout and installation	48 hours
8.	Substantial Completion Punch List	7 days
9.	Punch List Completion	7 days
10.	Maintenance Completion	7 days

PART 2 - PRODUCTS

2.1 PLANT MATERIAL

A. General: Furnish nursery-grown plants true to genus, species, variety, cultivar, stem form, shearing, and other features indicated in Plant Schedule or Plant Legend shown on Drawings and complying with ANSI Z60.1; and with healthy root systems developed by transplanting or root pruning. Provide well-shaped, fully branched, healthy, vigorous stock, densely foliated when in leaf and free of weeds, disease, pests, eggs, larvae, and defects such as knots, sun scald, injuries, abrasions, and disfigurement.

1. Trees with damaged, crooked, or multiple leaders; tight vertical branches where bark is squeezed between two branches or between branch and trunk ("included bark"); crossing trunks; cut-off limbs more than 3/4 inch (19 mm) in diameter; or with stem girdling or kinked roots will be rejected.

2. Plants shall have normal well-developed, vigorous and fibrous root systems which are neither root, nor container bound.

3. Collected Stock: Do not use plants harvested from the wild, from native stands, from an established landscape planting, or not grown in a nursery unless otherwise indicated.

B. Provide plants of sizes, grades, and ball or container sizes complying with ANSI Z60.1 for types and form of plants required. Plants of a larger size may be used if acceptable to Design Consultant, with a proportionate increase in size of roots or balls.

C. Labeling: Label five plants of each variety, size, and caliper with a securely attached, waterproof tag bearing legible designation of common name and full scientific name, including genus and species. Include nomenclature for hybrid, variety, or cultivar, if applicable for the plant as shown on Drawings.

D. If formal arrangements or consecutive order of plants is shown on Drawings, select stock for uniform height and spread, and number the labels to assure symmetry in planting.

E. Provide healthy, weed and disease-free plants of species and variety shown or listed, with well-established root systems reaching to sides of the container to maintain a firm ball, but not with excessive root growth encircling the container. Provide only plants that are acclimated to outdoor conditions before delivery.

F. Plants shall be grown in their container for at least six months, but not over two years.

G. Groundcover plants grown in flats shall be healthy vigorous rooted cuttings grown in flats for at least 3 months but not over six months.

H. Succulents: Succulents shall be acquired from a licensed nursery. Succulents shall be free of insects, mottled leaves, broken or split branches or trunks, scarring or other uncharacteristic growth patterns.

2.2 INORGANIC SOIL AMENDMENTS

A. Sulfur: Pelletized, biodegradable, commercially processed and packaged, and containing a minimum of 90 percent sulfur capable of oxidizing over time and providing nutrient

sulfur with a minimum of 99 percent passing through No. 6 sieve and a maximum of 10 percent passing through No. 40 sieve.

1. Acceptable Manufacturers:

a. “Tiger 90 CR”, John Deere Landscapes (800) 233-6933

B. Iron Sulfate: a non-staining iron with micronutrients, pelletized, slow release, environmentally safe; 40% Iron, 1% Manganese, 1% Zinc, 1% Magnesium, 6% Sulfur; 2% Humic Acids

1. Acceptable Manufacturers:

a. “Premium Green Iron 40% Fe”, Gro-Power®, Inc. (800) 473-1307

C. Agricultural Gypsum: Minimum 90 percent calcium sulfate (CaSo4, H2O), a commercially processed and packaged gypsum, finely ground with 90 percent passing through No. 50 sieve.

D. Sand: Clean, washed, natural or manufactured, and free of toxic materials.

2.3 ORGANIC SOIL AMENDMENTS

A. Soil Amendment: a blend of organic fractions with several degrees of breakdown rate, a long-lasting form of iron, trace elements, pH of 5.5 to 7.5, maximum salinity of 2.50 ECe, organic matter (dry weight basis) more than 90%, non-ionic wetting agent and total nitrogen content of 0.4 – 0.8%

1. Acceptable Manufacturers:

a. “Numex Lif”, John Deere Landscapes (800) 233-6933

b. “A-1 Nutri-Gro”, Hanson Aggregates/A-1 Soils

2.4 FERTILIZERS

A. Pre-plant Fertilizer for plants and lawns(5-3-1) with Soil Penetrant Added. Fertilizer and soil conditioner derived from organic materials consisting of higher plant form life, composted beyond the fibrous stage. Shall not contain the following: poultry, animal or human waste, pathogenic viruses, fly larvae, insecticides, herbicides, fungicides or poisonous chemicals that would inhibit plant growth. Physical properties: A uniform "Beaded" homogenous mixture - 100.00% passing through a #4 mesh screen - a water soluble bio-degradable binder is used to insure fast breakdown.

Nitrogen	5% minimum
Phosphoric Acid	3% minimum
Water Soluble Potash	1% minimum
Humus	70% minimum
Humic Acids	15% minimum
Soluble Metallic Iron	1% minimum

Soil Penetrant: (Alkyl Naphthalene Sodium Sulfonate.) 1% minimum

Bacterial "stimulator":(Common soil and airborne organisms - aerobic, anaerobic, yeast and mold) 60,000 per 100 gram minimum

1. Acceptable Manufacturers:

   a. “Gro-Power Plus 5-3-1”, Gro-Power®, Inc. (800) 473-1307

B. Pre-plant Fertilizer for plants and lawns (6-20-20): an organic based, long lasting, non burning, slow release, free flowing, uniform in composition fertilizer, suitable for application with approved equipment, and containing the following minimum available percentages of weight of plant food with trace minerals of 2% iron (expressed metallic) and 7% sulfur (elemental), Zinc .15% and Manganese .15%.

Nitrogen	6% minimum	
Phosphoric Acid	20%	minimum
Soluble Potash	20%	minimum

1. Acceptable Manufacturers:

   a. “Best 6-20-20 XB”, John Deere Landscapes (800) 233-6933.

C. Pre-plant Balanced Fertilizer for Phosphorous or potassium deficient soils. (12-12-12): a balanced formula with nutrients in each pellet (homogenous) to prevent streaking due to particle segregation. Contains Sulfur and Calcium to help withstand weather extremes, improved unproductive soils and improve overall color and disease resistance.

Nitrogen	12%	minimum
Phosphoric Acid	12%	minimum
Soluble Potash	12%	minimum
Sulfur	15%	minimum
Calcium	2.1%	minimum

1. Acceptable Manufacturers:

   a. “Best Triple Twelve 12-12-12”, John Deere Landscapes (800) 233-6933.

D. Lawn Post-plant Fertilizer: (18-3-7): with 40% of the nitrogen a slow release SCU. 20% humus, 4% humic Acids, 4% sulfur, 1% iron, 0.50% soil penetrant, and soil enhancers. Nitrogen source: 5.94% Ammoniacal Nitrogen, 4.86% Nitrate Nitrogen, 5.40% Sulphur Coated Slow-Release Nitrogen,1.08% Urea Nitrogen. Gro-Power bacterial "stimulator" included -bacteria (common soil and airborne organisms - aerobic, anaerobic,) yeast and mold, minimum 60,000 per 100 gram.

Nitrogen	18%	minimum
Phosphoric Acid	3% minimum	
Soluble Potash	7% minimum	

1. Acceptable Manufacturers:

   a. “Gro-Power Premium Hi-Nitrogen 18-3-7”, Gro-Power®, Inc. (800) 473-1307

E. Controlled Release Lawn Post-plant Fertilizer (25-5-5): Dry application, stain resistant, controlled release with polymer-coated granules, suitable for application with approved equipment.

Nitrogen (total)	25%	minimum
Ammoniacal Nitrogen	10.3%	minimum

Urea Nitrogen	14.7% minimum
Phosphate	5% minimum
Soluable Potash	5% minimum
Sulfur	11% minimum
Iron	0.9% minimum

1. Acceptable Manufacturers:

   a. "Best Super Turf 25-5-5" as supplied by John Deere Landscapes (800) 233-6933

F. Palm, Tropicals and Bamboo Fertilizer (9-3-9) : Controlled release nitrogen and potash with Micronutrients.

Nitrogen (total)	9% minimum
Water Soluble Organic Nitrogen	0.92%
Water Insoluble Organic Nitrogen	8.08%
Phosphoric Acid	3% minimum
Potash (total)	9% minimum
Soluble Potash	1.10%
Slowly available potash	7.9%
Calcium	3%
Magnesium	4%
Iron	2%
Manganese	0.05%
Zinc	0.05%

1. Acceptable Manufacturers:

   a. "Gro-Power Palm Fertilizer and Tropicals (9-3-9)",Gro-Power®, Inc. (800) 473-1307,

G. Planting Tablets: Tightly compressed chip type, long-lasting, slow-release, commercial-grade planting fertilizer in tablet form. Tablets shall break down with soil bacteria, converting nutrients into a form that can be absorbed by plant roots. Slow release fertilizer tablets, soil conditioner, 24-month formulation with trace elements, composted organic higher plant form life and mineral matter. Shall not contain poultry, animal or human waste.

1. Nutrient Composition:

Nitrogen (total)	20% minimum
Ammonical Nitrogen	2%
Water Soluable Organic Nitrogen	5.3%
Water Insoluable Organic Nitrogen	12.7%
Phosphoric Acid	10% minimum
Soluable Potash	5% minimum
Calcium	3.5%
Sulphur	2.5% minimum
Iron (Fe)	2% minimum
Manganese	0.05% minimum
Zinc	0.05% minimum
Humic Acids (derived from compost)	2.5% minimum

2. Acceptable Manufacturers:

a. “Gro-Power (20-10-5) Planting Tablets”, Gro-Power®, Inc. (800) 473-1307

2.5 MYCORRHIZAL SOIL CONDITIONER AND HUMIC ACIDS

A. Mycorrhizal Inoculum / Soil Conditioner: Inculum shall be both Endo and Ecto (granular), with consititing of propagules (spores, fragments of fungal mycelium, and pieces of mycorrhizal roots capable of colonizing host plant roots) of the vesicular arbuscular mycorrhizal species Glomus intraradices, Glomus aggregatum, Glomus mosseae, combined with other species and/or additional genera including, Sclerocyctis, Gigaspora, Scutellospora, Entrophospora, and Acaulospora. Ectomycorrhiza include Pisolithus and 4 species of Rhizopogon. Soil Conditioner portion shall consist of organic materials consisting of higher plant form life, composted beyond the fiberous stage, to humus. Also shall have humic acids and beneficial soil bacteria strains. It shall NOT contain poultry, animal or human waste (i.e., sewage sludge), pathogenic viruses, fly larvae, insecticides, herbicides, fungicide or poisonous chemicals that would inhibit plant growth.

1. Nutrient Composition:

Ingredients	percentage (minimum)
Mycorrhizal Inoculum	6,500/55,00 progagules per lb.*
Humus	65%
Humic Acids	25%

2. Acceptable Manufacturers

a. “GroLife Granular”, Gro-Power®, Inc (800) 473-1307.

B. Humic Acids (from Leonardite) 70 .00 %

1. Nutrient Composition: Per random sample of material.

Organic matter	40.00	%
Carbon	40.00	%
Nitrogen	0.05	%
Phosphoric Acid	0.07	%
Potash	0.13	%
Sulfur	0.21	%
Magnesium	0.18	%
Calcium	0.32	%
pH	4.0	
Soluble Salts	1.8	

2. Acceptable Manufacturers

a. “Tri-C Premium Humate” (800) 927-3311.

2.6 SOIL PENETRATING AGENT

A. Acceptable Manufacturers

1. "Sarvon", John Deere Landscapes (800) 233-6933.

2.7 PLANTING SOILS

A. Import Topsoil: ASTM D 5268 topsoil, with pH range of 5.5 to 7, a minimum of [**2**] percent organic material content; free of stones 1 inch or larger in dimension and other extraneous materials harmful to plant growth.

1. Silt plus clay content of the import soil shall not exceed 20% by weight with a minimum 95% passing the 2.0 millimeter sieve. The sodium absorption rate (SAR) shall not exceed 6 and the electrical conductivity (ECe) of the saturation extract of this soil shall not exceed 3.0 millimhos per centimeter at 25 degrees centigrade. The boron content shall be no greater than 1 part per million as measured on the saturation extract.

2. Additional Properties of Imported Topsoil or Manufactured Topsoil: Screened and free of stones 1 inch or larger in dimension; free of roots, plants, sod, clods, clay lumps, pockets of coarse sand, paint, paint washout, concrete slurry, concrete layers or chunks, cement, plaster, building debris, oils, gasoline, diesel fuel, paint thinner, turpentine, tar, roofing compound, acid, and other extraneous materials harmful to plant growth; free of obnoxious weeds and invasive plants including quackgrass, Johnsongrass, poison ivy, nutsedge, nimblewill, Canada thistle, bindweed, bentgrass, wild garlic, ground ivy, perennial sorrel, and bromegrass; not infested with nematodes; grubs; or other pests, pest eggs, or other undesirable organisms and disease-causing plant pathogens; friable and with sufficient structure to give good tilth and aeration. Continuous, air-filled pore space content on a volume/volume basis shall be at least 15 percent when moisture is present at field capacity. Soil shall have a field capacity of at least 15 percent on a dry weight basis.

3. Submit results of agricultural soils analysis testing for review and approval by the Design Consultant.

2.8 MULCHES

A. Organic Mulch: Free from deleterious materials and suitable as a top dressing of trees and shrubs, consisting of one of the following:

1. Type: " Gorilla Hair" Redwood Bark Mulch, fibrous, stringy, dark red product that is 100% derived from Sempervirens species of the Sequoia Redwood tree.

a. Size Range: Particle size shall be 95% passing a range from 1" to 3", with some fibers being longer than 3"

b. Acceptable Manufacturer:

1) John Deere Landscapes (800) 233-6933, or equal.

2. Type: "Eco- Mulch" 100% green waste mulch, free of trash and other deleterious materials.

a. Size Range: 3/8"-3"

b. Acceptable Manufacturer:

1) Earthwise (760) 599-4156

3. Type: "Pacific Mulch: Appearance grade, composed organic forest products, free of trash and other deleterious materials, with pathogens and weeds removed by temperature treatment.

a. Size Range: 1"-3"

b. Acceptable Manufacturer:

1) John Deere Landscapes (800) 233-6933

B. Mineral Mulch: Hard, durable stone, washed free of loam, sand, clay, and other foreign substances, of following type, size range, and color:

1. Type: Rock Mulch. Double washed and graded to "3/8 minus" crushed stone.

a. Size Range: as indicated on drawings

b. Color: as indicated on drawings

c. Acceptable Manufacturers:

1) KRC (760) 744-1035

2) Decorative Stone Solutions (800) 699-1878

3) Southwest Boulder (800) 540-1147

2.9 FILTER FABRIC

A. Nonwoven Geotextile Filter Fabric: Polypropylene or polyester fabric, 3 oz./sq. yd. minimum, composed of fibers formed into a stable network so that fibers retain their relative position. Fabric shall be inert to biological degradation and resist naturally-encountered chemicals, alkalis, and acids.

2.10 PESTICIDES

A. Prior to using pesticides, contractor shall review procedures with the Design ~~Consutlant~~Consultant and obtain written approval prior to using pesticides.

B. General: Pesticide registered and approved by EPA, acceptable to authorities having jurisdiction, and of type recommended by manufacturer for each specific problem and as required for Project conditions and application. Do not use restricted pesticides unless authorized in writing by authorities having jurisdiction.

C. Contractor shall be licensed by the County to perform pesticide applications.

D. Pre-Emergent Herbicide (Selective and Non-Selective): Effective for controlling the germination or growth of weeds within planted areas at the soil level directly below the mulch layer.

1. Acceptable Manufacturers:

a. Treflan
b. Surfland

c. Eptan

E. Post-Emergent Herbicide: Round-up

2.11 TREE STABILIZATION MATERIALS

A. Stakes and Guys:

1. Wood Stakes: Shaved, sound, new lodgepole pine, free of knots, branches, holes, cross grain, and other defects, of the length indicated on the Drawings, pointed at one end.

a. Stakes for 24” box trees or smaller shall be no less than 10 feet in length and 2” in diameter.

b. Stakes for 26” box trees and larger shall be no less than 12 feet in length and 3” in diameter.

c. Acceptable Manufacturers:

1) Villa Root Barrier, Inc. (800) 654-4067

2. Tree Ties: Flexible non-deteriorating self fastening, black vinyl ties of sizes required to adequately support trees.

a. Acceptable Manufacturers:

1) Gro-Straight ties

2) Cinch-Ties

3. Guying Materials: 3/16” braided steel cable, 6” open turnbuckles, ½” pvc pipe, Duckbill Anchors or 2 x 4 x 24” redwood deadman or approved equal.

4. Flags: Standard surveyor's plastic flagging tape, white, 6 inches long.

2.12 LANDSCAPE EDGINGS

A. Steel Edging: Standard commercial-steel edging, rolled edge, fabricated in sections of standard lengths, with loops stamped from or welded to face of sections to receive stakes.

1. Basis-of-Design Product: Subject to compliance with requirements, provide “Duraedge” or comparable product by one of the following:

a. Russell, J. D. Company (The).

2. Steel curbing shall be ¼” thick by 5”deep with 7 stakes per section, painted at the factory.

3. Stakes: Tapered steel, a minimum of 14 inches long.

4. Accessories: Standard tapered ends, corners, and splicers.

5. Finish: Painted Steel

a. Paint Color: Black

2.13 AERATION TUBES

A. Tubes: 4" dia. Schedule 40 PVC perforated pipe cut to lengths as shown on the Drawings.

1. Acceptable Manufacturer: Pacific Plastics, Inc. (714)-990-9050.

B. Grates: 4"dia.

1. For Bark Chip Planting areas: round, black, plastic atrium drain grates;

2. For Lawn areas: round, green, flat plastic drain grates;

3. For Gravel and stone mulch planting areas: round, brown, flat plastic drain grates.

4. Acceptable Manufacturer: National Diversified Sales (NDS).

C. Filter fabric "sock": Spunbond, Typar 3341, Geoscape Landscape Fabric - 2.5 oz., Commercial Grade"

1. Acceptable Manufacturer: ADS (800) 821-6710.

2.14 ROOT BARRIER

A. Root barrier shall be "Typar Biobarrier" root control root fabric with Treflan, 39" width unless otherwise noted in the plans.

1. Acceptable Manufacturer: Dow Elanco., John Deere Landscapes (800) 233-6933.

B. Root barrier shall be model #LB18-2 (for curbs and walls) or #LB12-2 (for paving). The barriers shall be black, injection molded panels, of 2mm wall thickness in modules 61cm long by 30cm or 46cm deep; manufactured with 50% post consumer recycled polypropylene plastic with added ultraviolet inhibitors; recyclable. Each panel shall have: not less than 4 molded, integral, vertical, root deflecting ribs of a minimum 1.5mm thickness protruding 13mm at 90° from the interior of the panel, spaced 15cm apart. Barrier shall have a double top edge consisting of two parallel, integral, horizontal ribs at the top of the panel of a minimum 1.5mm thickness, 9.5mm wide and 6.5mm apart with the lower rib attached to the vertical root deflecting ribs.

1. Acceptable Manufacturer: Deep Root Partners, 81 Langton St, Suite 4 San Francisco, CA 94103 (800-458-7668).

2.15 EROSION CONTROL MATERIALS

A. Erosion Control Jute Mesh: Jute mesh shall be new and shall be of a uniform, open, plain-weave mesh. The mesh shall be made from unbleached single jute yarn. The yarn shall be of loosely twisted construction and shall not vary in thickness by more than half

its normal diameter. Jute mesh shall be furnished in rolled strips and shall conform to the following provisions.

1. Width - 1200 mm ~~{48 inches},~~ with a tolerance of ± 25 mm ~~{± one inch}~~

2. Warp ends - 78, minimum, per width.

3. Weft ends - 44, minimum, per meter ~~{yard}~~

4. Mass - 0.57 to 0.63-kg/m ~~{1.16 to 1.28 pounds per yard}~~

5. Include manufacturer's recommended steel wire staples, U- shaped, 8 gauge, 8 inches long.

6. Acceptable Manufacturer - Anti-Wash Geojute, Belton Ind. Dist. By John Deere Landscapes (800) 233-6933.

B. Provide at slopes 3:1 or greater or as otherwise indicated in the Drawings.

2.16 MISCELLANEOUS PRODUCTS

A. Wood Pressure-Preservative Treatment: AWPA C2, with waterborne preservative for soil and freshwater use, acceptable to authorities having jurisdiction, and containing no arsenic; including ammoniacal copper arsenate, ammoniacal copper zinc arsenate, and chromated copper arsenate.

B. Antidesiccant: Water-insoluble emulsion, permeable moisture retarder, film forming, for trees and shrubs. Deliver in original, sealed, and fully labeled containers and mix according to manufacturer's written instructions.

1. Acceptable Manufacturer: Wilt Pruf

C. Burlap: Non-synthetic, biodegradable.

D. Planter Drainage Gravel: Washed, sound crushed stone or gravel complying with ASTM D 448 for Size No. 8.

E. Tree Protection Material: Enclosure: 5' tall chain link fence with a minimum 1½" dia. posts and 1" top and bottom rails. Caution tape, or twine and flags are not acceptable.

F. Vine Ties: Vine ties shall be silicone epoxy type, with wire clasp for vines.

1. Acceptable Manufacturers: Dexol "Stick-n-ty"

PART 3 - EXECUTION

3.1 EXAMINATION

A. No work under this section shall commence until submittals have been reviewed and approved. Do not proceed with installation until unsatisfactory conditions have been corrected.

B. Examine areas to receive plants for compliance with requirements and conditions affecting installation and performance.

1. Verify that no foreign or deleterious material or liquid such as paint, paint washout, concrete slurry, concrete layers or chunks, cement, plaster, oils, gasoline, diesel fuel, paint thinner, turpentine, tar, roofing compound, or acid has been deposited in soil within a planting area.

2. Do not mix or place soils and soil amendments in frozen, wet, or muddy conditions.

3. Suspend soil spreading, grading, and tilling operations during periods of excessive soil moisture until the moisture content reaches acceptable levels to attain the required results.

4. Uniformly moisten excessively dry soil that is not workable and which is too dusty.

C. Proceed with installation only after unsatisfactory conditions have been corrected.

D. If contamination by foreign or deleterious material or liquid is present in soil within a planting area, remove the soil and contamination as directed by Design Consultant and replace with new planting soil.

3.2 SOILS TESTS

A. At the conclusion of rough grading, collect soil samples in the locations indicated on the plans and as described in Part 1 Quality Assurance. Submit the samples to an approved agricultural soils laboratory for testing.

B. Submit the test results and laboratory recommendations to the Design Consutlant for review. No amendments shall be applied prior to receipt of test results. Test recommendations shall include the amendments listed in this specification.

C. The Design Consultant shall recommend changes to the amendments and/or procedure listed herein, after review of the test results.

D. Costs for testing and retesting the soil shall be included in the base bid.

E. Soil testing is considered a long lead item, retesting may be required to confirm that recommended remediation measures were successful and soil test results are within the acceptable ranges for plant growth. The time frame for this work shall not be shortened because adequate time was not allowed for testing and retesting of the soils. The soils will need to be retested until an acceptable test result is attained.

F. Cost change for soil preparation work shall be in accordance with the provisions of the General Conditions. Refer to Part 1 Quality Assurance for additional requirements.

3.3 WEED CONTROL

A. Prior to commencement of the planting operations, remove weeds including the roots, remove existing plant material including stumps designated not to remain, dispose of cleared and grubbed material at a legal refuse site.

B. Prior to using herbicides, review procedures with the ~~Owner~~City, and obtain written approval. Herbicide applications requiring government or agency approvals shall be

performed by an operator licensed by the County. Protect existing plant material on site and on adjacent properties from exposure to herbicides and equipment.

3.4 PREPARATION AND LAYOUT

A. Protect structures, utilities, sidewalks, pavements, and other facilities and turf areas and existing plants from damage caused by planting operations.

B. Install erosion-control measures to prevent erosion or displacement of soils and discharge of soil-bearing water runoff or airborne dust to adjacent properties and walkways.

C. Lay out individual tree and shrub locations and areas for multiple plantings. Stake locations, outline areas, adjust locations when requested, and obtain Design ~~Consutlant's~~Consultant's acceptance of layout before excavating or planting. Make minor adjustments as required.

3.5 EROSION CONTROL

A. Install jute mesh on slopes over 3:1. After grading, clearing and grubbing that is required, fine-grade the sloped planting areas to receive jute mesh, removing surface rocks and debris greater than 2" in diameter.

B. Jute mesh shall be installed loosely on the slopes. Longitudinal seams of the jute mesh shall be at right angles to the slope contour lines. The installed mesh shall fit the soil surface contour and shall be held in place by 9 inch ~~230 mm {9-inch}~~ long, ~~3.05 mm~~11 gage ~~(11-gage)~~ (minimum) steel wire staples driven vertically into the soil at approximately ~~600-mm {~~24-inch~~}~~ spacing. Jute mesh strips shall overlap the adjacent jute mesh a minimum of ~~150 mm {~~6 inches~~}~~. Ends of strips shall be buried into the soil a minimum of ~~150 mm {~~6 inches~~}~~.

3.6 SOIL PREPARATION

A. Proceed with this part of the work only after soil test analysis recommendations have been approved by the Design ~~Consutlant~~Consultant.

B. Apply 50 lbs/1,000 SF of Gypsum to subgrade prior to tilling.

C. Rip or loosen native soil or subgrade for the entire extent of planting areas to a minimum depth of 18 inches without adding soil conditioner.

D. Remove stones larger than 1 inch in dimension and sticks, roots, rubbish, and other extraneous matter to a depth of 18" below finish grade and legally dispose of them off ~~Owner's~~ City's property.

E. Prepare areas within the driplines of existing trees by hand, do not use mechanical tillers.

F. Spread soil amendments, remaining gypsum and other amendments over~~-~~ planting areas and mechanically till and blend to a depth of 6 inches.

G. Delay mixing fertilizer with planting soil if planting will not proceed within a few days.

H. Use the soil amendments listed below for bidding purposes only. Materials and application rates may be modified after receipt of soils tests noted Part 3 Soils Tests.

Amendments	Rate or Quantity/1,000 SF.
Soil Amendment	4 cubic yards
Gypsum	100 lbs.
Pre-Plant Fertilizer	150 lbs.
Soil Sulfur	10 lbs.
Iron Sulfate	10 lbs
Mycorrhizal Soil Conditioner	20 lbs.
Humic Acid	50 lbs.
Soil Penetrating Agent	16 oz.

I. Float smooth and compact soil preparation areas to 85% relative dry density, maintain positive drainage, flow lines, and swells to area drains, fine grade to within plus or minus 0.10 foot of the grades shown on the Drawings.

J. Finish Grading: Grade planting areas to a smooth, uniform surface plane with loose, uniformly fine texture. Roll and rake, remove ridges, and fill depressions to meet finish grades.

K. Before planting, obtain Design ~~Consutlant's~~Consultant's acceptance of finish grading; restore planting areas if eroded or otherwise disturbed after finish grading.

L. Application of Mycorrhizal Fungi Soil Conditioner: Per the manufacturer's recommendations, broadcast dry product uniformly over prepared soil at application rates listed in the specifications.

3.7 PRE PLANT WEED CONTROL

A. Clear and remove existing weeds at least one-inch ~~(1")~~ below the soil surface.

B. Fertilize areas to receive planting with a 46-0-0 NPK commercial fertilizer at the rate of ½ lb. per 1,000 square feet.

C. After fertilization, irrigate the soil thoroughly and continuously at the equivalent of four inches ~~(4")~~ of water distributed over a fourteen ~~(14)~~ – day period. The application of water shall be applied to the soil as needed to gradually soak through the soil profile and not allowed to run-off the surface. Employ a specific watering duration and frequency program designed to germinate residual weeds.

D. After sufficient weed germination is present, apply non-selective, post-emergent contact herbicide, in strict accordance to the Manufacturer's directions. Protect and buffer surrounding properties, buildings, and vegetation from overspray, as required.

E. Allow for a sufficient time period to ensure that the weeds are dead and the herbicide has dissipated, per the Manufacturer's recommendation.

F. Water planting areas thoroughly and continuously for a period of one week after the application of the herbicide. Discontinue the watering process for one day prior to the second application of the herbicide. Apply a second application of the herbicide. Avoid irrigation for a minimum of four days after the second application for effective weed kill.

G. After the second application and waiting period, water planting areas thoroughly and continuously for three consecutive days to saturate upper layers of the soil prior to commencing planting operations.

H. Dead weeds shall be cleared and removed prior to planting.

I. Maintain a weed-free Project Site until final acceptance by the Diocese, utilizing mechanical, chemical or manual treatment.

3.8 EXCAVATION FOR TREES AND SHRUBS

A. Planting Pits and Trenches: Excavate circular planting pits with sides sloping inward at a 45-degree angle. Excavations with vertical sides are not acceptable. Trim perimeter of bottom leaving center area of bottom raised slightly to support root ball and assist in drainage away from center. Do not further disturb base. Ensure that root ball will sit on undisturbed base soil to prevent settling. Scarify sides of planting pit smeared or smoothed during excavation.

1. Excavate approximately two times as wide as ball diameter for container-grown stock.

2. Do not excavate deeper than depth of the root ball less one inch, measured from the root flare to the bottom of the root ball.

3. If area under the plant was initially dug too deep, add soil to raise it to the correct level and thoroughly tamp the added soil to prevent settling.

4. Maintain required angles of repose of adjacent materials as shown on the Drawings. Do not excavate subgrades of adjacent paving, structures, hardscapes, or other new or existing improvements.

5. Maintain supervision of excavations during working hours.

6. Keep excavations covered or otherwise protected when unattended by Contractor ~~Installer~~'s personnel.

7. If subdrainage is shown on Drawings or required under planting areas, coordinate planting operations with installation of subdraiange.

B. Obstructions: Notify Design ~~Consutlant~~Consultant if unexpected rock or obstructions detrimental to trees or shrubs are encountered in excavations.

C. Drainage: Notify Design Consultant if subsoil conditions evidence unexpected water seepage or retention in tree or shrub planting pits.

D. Subsoil and topsoil removed from excavations may be amended and used as planting backfill mix.

3.9 PERCOLATION TESTING

A. Locate and prepare the percolation test pits where indicated on the Drawings, and as described herein.

B. Excavate the pits as described under the Excavation for Trees and Shrubs section, remove loose material, and fill the pits with six inches ~~(6")~~ of water. After 12 hours refill with the same amount of water. Six hours after the second filling, inspect the pits with the Design Consultant and document locations where water remains in the pit.

C. If percolation problems occur, provide means and methods for correcting said problems. Planting operations at the locations identified shall be suspended as necessary or as directed by the Design ~~Consutlant~~Consultant. Payment for corrective work shall be in accordance with the provisions of the General Conditions. Proceeding with the work without written approval, does not entitle the Contractor to additional compensation for corrective work.

D. If percolation problems occur, drill 8-inch- ~~(150-mm-)~~ diameter holes, 24 inches ~~(600-mm)~~ apart, into free-draining strata or to a depth of 5 feet below the bottom of rootball whichever is less, and backfill with drainage gravel and 4"diameter perforated PVC pipe open to below. Cap with appropriate grate, see AERATION TUBES Part 2.

3.10 TREE, SHRUB, GROUNDCOVER AND VINE PLANTING

A. To leach saline and sodic salts from the soil, fill excavations with water and allow to percolate away before positioning trees and shrubs.

B. Notify the Design ~~Consutlant~~Consultant of conditions where hardpan, adobe clay, or inadequate subgrade compaction are encountered. Planting operations at the locations identified shall be suspended pending corrective action.

C. Before planting, verify that root flare is visible at top of root ball according to ANSI Z60.1. If root flare is not visible, remove soil in a level manner from the root ball to where the top-most root emerges from the trunk. After soil removal to expose the root flare, verify that root ball still meets size requirements.

D. Remove injured roots by cutting cleanly; do not break.

E. Use the soil amendments listed below for bidding purposes only. Materials and application rates may be modified after receipt of soils tests noted Part 3 Soils Tests.

1. Backfill mixture for plants except palms shall be thoroughly blended, consisting of the following:

Soil Amendment	1	part
Existing Soil	3	parts
Iron Sulfate	2	lb/cy of mix
Soil Sulfur	1	lb/cy of mix
Gypsum	25	lb/cy of mix
Pre-plant Fertilizer (5-3-1)	18	lb/cy of mix
Mycorrhizal Inoculum Soil Conditioner	10	lb/cy of mix
Humic Acid		3lb/cy of mix
Soil Penetrating Agent		1-2 oz./Gallon

F. Place planting tablets in the planting pits at the following rates:

Plant Size	Quantity	Tablet Size

liner and flat size plant	1	5	gram
1 gallon container	1	21	gram
5 gallon container	2	21	gram
15 gallon container	3	21	gram
box specimen	2	21	gram for each 12” of box size

G. Set container stock plumb and in center of planting pit or trench with root flare 1 inch (25 mm) above adjacent finish grades or as indicated in the Drawings.

1. Use planting soil listed above for backfill.

2. Do not use planting stock if root ball is cracked or broken before or during planting operations.

3. Backfill around root ball in layers, tamping to settle soil and eliminate voids and air pockets. When planting pit is approximately one-half filled, water thoroughly before placing remainder of backfill. Repeat watering until no more water is absorbed.

4. Place planting tablets in each planting pit when pit is approximately one-half filled; in amounts listed in the specifications. Place tablets beside the root ball about 1 inch from root tips; do not place tablets in bottom of the hole and do not place plant tablets in direct contact with the rootball.

5. Continue backfilling process. Water again after placing and tamping final layer of soil.

6. When planting on slopes, set the plant so the root flare on the uphill side is flush with the surrounding soil on the slope; the edge of the root ball on the downhill side will be above the surrounding soil. Apply enough soil to cover the downhill side of the root ball.

3.11 AERATION TUBES

A. Wrap tubes with the fabric and set plumb in opposite corners of the planting pit. Place gravel and backfill mix as shown on the Drawings. Tubes to remain open to below. Knot filter fabric sock to prohibit sediment from getting into tubes. Cut tubes to 2” above finish grade and cap with a drain grate.

3.12 TREE, SHRUB, AND VINE PRUNING

A. Remove only dead, dying, or broken branches. Do not prune for shape.

B. Do not apply pruning paint to wounds.

3.13 TREE STABILIZATION

1. Upright Staking and Tying: Per the Drawings.

2. Support trees with bands of flexible ties at contact points with tree trunk. Allow enough slack to avoid rigid restraint of tree.

3.14 VINE STAKING

A. Vine Staking: Remove nursery stakes or trellis from vines, and spread or "fan out" the branches in a symmetrical form against the adjacent walls, columns, fences, or structures. Attach the branches as necessary with vine ties. Use clear silicone to attach ties to masonry, concrete, or stucco, and 4d galvanized nails to wood fences.

3.15 ROOT-BARRIER INSTALLATION

A. Install root barrier where trees are planted within 60 inches of paving or other hardscape elements, such as walls, curbs, and walkways unless otherwise shown on Drawings.

B. Align root barrier vertically and run it linearly along and adjacent to the paving or other hardscape elements to be protected from invasive roots.

C. Install root barrier continuously for a distance of 60 inches in each direction from the tree trunk, for a total distance of 10 feet per tree. If trees are spaced closer, use a single continuous piece of root barrier.

1. Position top of root barrier at finished grade of soil unless otherwise directed. Adhere root barrier product in place using fabric pins or other measures. Secure fabric every two feet for entire length of installation. Adhere to edging or hardscape.

2. Overlap root barrier a minimum of 12 inches at joints.

3. Do not distort or bend root barrier during construction activities.

4. Do not install root barrier surrounding the root ball of tree.

3.16 PLANTING AREA MULCHING

A. The entire limit of all planting areas shall receive landscape mulch unless otherwise specifically stated. Note that the drawings do not show mulch hatch patterns underneath plant symbols for graphic purposes only. The intention is that the entire planted area including the areas underneath the planting symbols shall receive the same landscape mulching.

B. Bark Mulch: At the completion of the planting work, rake smooth the areas indicated on the Drawings, and spread a 3" layer of mulch over the areas. Within 3' of flatwork, headers, curb, and mow edges, taper or reduce the depth to 2". Keep mulch 2 feet away from tree trunks and 4-6" away from shrub stems.

C. Gravel/D.G. Mulch: At the completion of the planting work, rake smooth the areas indicated on the Drawings, and spread a 3" layer of gravel/DG. over the areas.

D. Stone Mulch: At the completion of the planting work, rake smooth the areas indicated on the Drawings, and spread a layer of stone over a full depth 3" layer of Decomposed Granite mulch. Depth of rock mulch shall be as indicated on the Drawings or 1 ½ times the size of the largest stone size. Keep mulch 2 feet away from tree trunks and 4-6" away from shrub stems.

3.17 EDGING INSTALLATION

A. Steel Edging: Install steel edging where indicated according to manufacturer's written instructions. Anchor with steel stakes spaced approximately 30 inches apart, driven below top elevation of edging.

3.18 TREE GRATE INSTALLATION

3.19 PLANT MAINTENANCE

A. Maintain plantings by pruning, cultivating, watering, weeding, fertilizing, mulching, restoring planting saucers, adjusting and repairing tree-stabilization devices, resetting to proper grades or vertical position, and performing other operations as required to establish healthy, viable plantings. Spray or treat as required to keep trees and shrubs free of insects and disease.

B. Fill in as necessary soil subsidence that may occur because of settling or other processes. Replace mulch materials damaged or lost in areas of subsidence.

C. Apply treatments as required to keep plant materials, planted areas, and soils free of pests and pathogens or disease. Use integrated past management practices whenever possible to minimize the use of pesticides and reduce hazards. Treatments include physical controls such as hosing off foliage, mechanical controls such as traps, and biological control agents.

3.20 PESTICIDE APPLICATION

A. Apply pesticides and other chemical products and biological control agents in accordance with authorities having jurisdiction and manufacturer's written recommendations. Coordinate applications with ~~Owner's~~ City's operations and others in proximity to the Work. Notify ~~Owner~~ Design Consultant before each application is performed.

B. Written permission is required.

C. Pre-Emergent Herbicides (Selective and Non-Selective): Apply to tree, shrub, and ground-cover areas in accordance with manufacturer's written recommendations. Do not apply to seeded areas.

3.21 CLEANUP AND PROTECTION

A. During planting, keep adjacent paving and construction clean and work area in an orderly condition.

B. Protect plants from damage due to landscape operations and operations of other contractors and trades. Maintain protection during installation and maintenance periods. Treat, repair, or replace damaged plantings.

C. After installation and before Substantial Completion remove nursery tags, nursery stakes, tie tape, labels, wire, burlap, and other debris from plant material, planting areas, and Project site.

3.22 DISPOSAL

A. Remove surplus soil and waste material including excess subsoil, unsuitable soil, trash, and debris and legally dispose of them off ~~Owner's~~ property.

END OF SECTION

SECTION 32 94 46 - STAINLESS STEEL TRELLIS SYSTEM

PART 1 - GENERAL

1.1 SUMMARY

A. Section includes:

1. Vertical wire ropes.

2. Horizontal wire ropes.

3. Wire rope grid.

4. Wire rope web net.

5. Rectangular grid of vertical wire ropes and horizontal rods.

6. Vertical wire ropes attached to truss frames at top and bottom.

7. Rectangular grid of vertical wood rods and horizontal stainless steel rods.

8. Wire rope column enclosures.

B. Related sections:

1.2 RELATED SECTIONS

1. Division 32 Section "Turf and Grasses" for turf (lawn) and meadow planting, hydroseeding, and erosion-control materials.

2. Division 32 Section "Plants" for plant material to grow on trellis system

3. Section 01 81 13, “SUSTAINABLE DESIGN REQUIREMENTS”: LEED Requirements.

1.3 REFERENCES

A. American Iron and Steel Institute (AISI) - Steel Product Manual; Stainless and Heat Resisting Steel.

B. ASTM A 276 - Stainless and Heat-Resisting Steel Bars and Shapes.

C. ASTM A 380 - Practice for Cleaning and Descaling Stainless Steel Parts, Equipment and Systems.

D. ASTM A 492 - Specification for Stainless Steel Rope Wire.

E. ASTM A 555 - Stainless Steel Wire.

F. ASTM A 582 - Specification for Free-Machining Stainless and Heat-Resisting Steel Bars.

G. ASTM B 912 - Specification for Passivation of Stainless Steels Using Electropolishing.

H. ASTM F 1145 - Specification for Turnbuckles, Swaged, Welded, Forged.

I. MIL-C-5688 - Pre-Stretching and Proof-Testing of Wire Rope Assemblies.

J. US Green Building Council (USGBC), www.usgbc.org

1.4 DESIGN / PERFORMANCE REQUIREMENTS

A. Structural Requirements: Provide stainless steel trellis systems capable of withstanding the effects of gravity loads and the following loads and stresses within limits and under conditions indicated on the Drawings:

1. Components: Design and size to withstand dead and live loads of components, plants, rain, snow and ice and loads caused by positive and negative wind pressure acting normal to plane of trellis as calculated in accordance with applicable code.

B. Trellis systems shall be designed, fabricated, and installed to accommodate expansion and contraction of metal components without causing undue stress, buckling, opening of joints, and distortion.

C. Design supports and hardware to withstand loads encountered without excessive deflection or distortion when cables are tensioned to required amounts required to conform to applicable building codes.

1.5 SUBMITTALS

A. Submit under provisions of Section 01 30 00.

B. Product Data: Provide manufacturer's standard catalog data for specified products demonstrating compliance with referenced standards. Provide list of fittings being provided with descriptions, load capabilities, and either photographs or drawings for each type.

C. Shop Drawings: Submit Shop Drawings for fabrication and installation. Include the following:

1. Plans, elevations, and detail sections.

2. Indicate materials, methods, finishes, fittings, fasteners, anchorages, and accessory items.

3. Provide setting diagrams and templates for anchorages, sleeves, and bolts to be installed by others.

4. Where materials or fabrications are indicated to comply with design

loadings, include material and safety factor properties, and other information needed for structural analysis.

D. Verification Samples: Two samples representing actual products and finishes as follows:

1. Wire rope with fitting, minimum size 12 inches (300 mm) long.

2. Rods, minimum size 12 inches (300 mm) long.

3. Typical fittings.

E. Installation Instructions: Manufacturer's printed installation instructions.

F. Operation and Maintenance Data: Include methods for maintaining installed products and precautions against cleaning materials and methods detrimental to finishes and performance.

G. Manufacturer's Certificates: Certify products meet or exceed specified requirements.

H. LEED certification product data as specified in Division 1, Section 01 81 13, “SUSTAINABLE DESIGN REQUIREMENTS”, for the following LEED credits:

1. Credit MR 4.1 & 4.2, Recycled Content

2. Credit MR 5.1 & 5.2, Regional Materials, Manufactured & Harvested / Extracted Locally

1.6 QUALITY ASSURANCE

A. Manufacturer Qualifications: Company specializing in manufacturer of stainless steel wire rope, fittings, and other stainless steel components with 10 years minimum successful experience.

B. ~~Installer~~ Contractor Qualifications: Experienced in performing work of this section that has specialized in installation of work similar to that required for this project.

C. Mock-Up: Provide a mock-up for evaluation of preparation techniques and installation workmanship.

1. Locate in areas designated by Design Consultant.

2. Size: Minimum of 10 SF (1 sm).

3. Do not proceed with remaining work until workmanship is approved by Design Consultant.

4. Rework mock-up as required to produce acceptable work.

5. Retain mock-up during construction as quality standard.

6. Remove and legally dispose of mock-up when no longer needed.

7. Incorporation: Incorporate mock-up into final construction.

D. Preinstallation Meetings: Conduct meetings including Contractor, Design Consultant, fabricator, Contractor~~installer~~ and other subcontractors whose work involves cable trellis system to verify project requirements, framing and support conditions, mounting surfaces and manufacturer's installation. Comply with Division 1 requirements.

1.7 DELIVERY, STORAGE, AND HANDLING

A. Store products in manufacturer's unopened packaging until ready for installation.

B. Handle and store products according to manufacturer's recommendations. Leave products wrapped or otherwise protected and under clean and dry storage conditions until required for installation.

C. Exercise care not to scratch, mark, dent, or bend metal components during delivery, storage, and installation.

1.8 PROJECT CONDITIONS

A. Verify actual openings by field measurements before fabrication; show recorded measurements on shop drawings.

B. Coordinate field measurements and fabrication schedule with construction progress to avoid construction delays.

PART 2 - PRODUCTS

2.1 MANUFACTURERS

A. Acceptable Manufacturer:

1. Jakob, Inc., Toll Free Tel: 866-215-1421

2. Carl Stahl DécorCable

3. Feeney Architectural Products

4. Or approved Equal

B. Requests for substitutions will be considered in accordance with provisions of Section 01 60 00.

C. Provide cable, materials, fittings and components from a single manufacturer.

2.2 ASSEMBLIES

A. Provide Jakob, Inc. INOX Line stainless steel climbing plant trellis structures and mounting as indicated on the Drawings. Manufacturer shall engineer and fabricate

components and assemblies for installation.

B. Green Facades: Stainless steel climbing plant trellis structure and mountings.

1. Purpose: Mounted on facades as a training system for plants as indicated on Drawings.

2. Assembly: Column greening system.

3. Assembly: Greening barrier rod system.

4. Assembly: Greening barrier wooden rod system.

5. Assembly: Webnet trelliswork system.

6. Assembly: Trelliswork system.

C. Netting Infill: Pliable, transparent netting arrays made of AISI 316 stainless steel wire rope.

1. Product: Webnet as manufactured by Jakob, Inc.

2. Purpose: Trellis infill.

3. Material:

a. AISI 316 stainless steel Wire Rope:

b. Stainless Steel Fittings:

c. Stainless Steel Fasteners:

d. Matching End Connectors:

2.3 WALL MOUNTING SPACERS/BRACKETS

A. Provide wall mounting spacers, brackets and fittings required for attachment and connection to the structure and for support of stainless steel wire rope, wire netting, metal rod and wood rod infill as indicated on the Drawings.

B. Spacer Clearance and Load:

1. Wall Clearance: per manufacturer recommendations

2. Design Lateral Force: per manufacturer recommendations

3. Spacer layout as selected by manufacture to suit application and design requirements specified.

C. Mounting Types: Fabricate from AISI Type 316 and 316L stainless steel complying with ASTM F 1145; INOX Line anchors as manufactured by Jakob, Inc. Provide sizes and types as required to meet project design conditions specified

and indicated on Drawings including:

1. Through Hole in Wood: Headless screw with nut and check nut on the back and a from ring nut with support washer on the front.

2. Screw-In Nut for Wood: Internal threaded device that accepts the threaded rope holder or headless screw device.

3. Perforated Hollow Wall Anchor: Masonry or concrete anchor set with two-component adhesive with internal threads to accept threaded rope holder or headless screw device.

4. Bolt Anchor with Internal Thread: Expansion bolt for concrete with internal threads to accept threaded wall fittings.

5. Externally Insulated Facades: Expansion bolt for concrete with insulated support tube spacers and internal threads to accept externally threaded wall fittings.

6. Shop applied swaged rope ends: Threaded external and internal swivel ends, turnbuckles, tensioning screws, end stops, clevis ends, eye ends, loop ends, and end cones.

D. Stainless Steel Bars and Shapes: Type 316 stainless steel conforming to ASTM A 276. Provide sizes and shapes as required to meet project design conditions specified and indicated on Drawings.

2.4 WIRE ROPE

A. Material: ASTM A 492 and ASTM A 555, Type 316 stainless steel. Fabricate wire rope with integral colored filament designating specific manufacturer.

B. Type 1: Per manufacturer recommendations

C. Length: Provide wire rope tendons in lengths indicated on Drawings and approved shop drawings.

1. Provide optimum adjustment in both directions by calculating final tendon lengths with allowance for tensioning fittings with 2/3 open and with 1/3 of thread length engaged.

2. Measure tendon length from center of pin to center of pin, or center of eye to center of eye.

2.5 STAINLESS STEEL RODS

A. Rod spindles: Solid stainless steel rods, AISI Type 316 complying with ASTM A 276.

B. Size:

1. Diameter: 5/32 inch (4 mm).

2. Lengths as indicated on the Drawings.

C. Rod termination:

1. Cut on ends.

2.6 FITTINGS

A. Provide fittings required for attachment and connection of stainless steel wire rope, wire netting, metal rods and/or wood rod infill to support framework and substrates.

B. Fitting minimum breaking strength:

1. As selected by manufacture to suit application and design requirements specified.

C. Types: Fabricate from AISI Type 316 and 316L stainless steel complying with ASTM F 1145; INOX Line Fittings as manufactured by Jakob, Inc. Provide sizes and types as required to meet project design conditions specified and indicated on Drawings and reviewed shop drawings including:

1. Shop applied swaged rope ends: Threaded external and internal swivel ends, turnbuckles, tensioning screws, end stops, clevis ends, eye ends, loop ends, and end cones.

2. Screwed rope ends for on-site assembly: Threaded external and internal swivel ends, turnbuckles, tensioning screws, end stops, clevis ends, eye ends, loop ends, and end cones.

3. Clamps: Ring clamps, cross clamps, wire rope clamping cones, and connecting wire rope clamps.

4. Post fittings: Straight, angled, and spherical

5. Anchoring systems: Studs, clevis, eye end, eye bolt, slotted, spacer baskets, radial clevis holder, cross clamp with support disk, slotted rope deflector, ball cage.

D. Accessories: Provide threaded couplings, tensioning screws, cover disks, eye bolts, eye nuts, carabineers, shackles, clips, welded rings, screws, washers, lock nuts, hexagonal nuts, dome nuts, wall anchors, screws, and wire end caps as required to complete the installation.

2.7 FINISH

A. After fabrication, clean and de-scale stainless steel wire rope, fittings, and other components in accordance with ASTM A 380.

B. Finish components with AISI No. 4 brushed satin finish in accordance with ASTM B 912.

2.8 FABRICATION

A. Tolerances: Verify dimensions on site prior to shop fabrication.

B. Fabricate stainless steel in accordance with AISI Steel Product Manual and the manufacturers requirements.

C. Shop fabricate to designs indicated on Drawings and to meet performance requirements specified.

D. Shop fabricate fittings, interfacing parts and assemblies so that field cutting adjustments are not necessary.

E. Coordinate requirements, dimensions and spacings of trellis system to ensure required factory drilled holes in supporting framework are correctly located.

F. Make exposed joints butt, flush, and hairline.

G. Fabricate connections that will be exposed to weather in a manner to exclude water. Provide weep holes where water may accumulate.

PART 3 EXECUTION

3.1 EXAMINATION

A. Before beginning installation, verify that conditions installed under other sections are acceptable for installation of cable trellis systems in accordance with manufacturer's installation instructions.

B. Supply items required to be cast into concrete or embedded in masonry with setting templates, to appropriate Sections.

C. Verify supporting system for stainless steel wire rope trellis is prepared for attachment of anchors, fittings, wire rope, and wire netting and transfer of calculated loads.

D. If conditions are the responsibility of another Contractor~~installer~~, notify Design Consultant of unsatisfactory preparation before proceeding.

3.2 PREPARATION

A. Verify alignment, support dimensions, and tolerances are correct.

B. Inventory components to ensure required items are available for installation. Inspect components for damage. Remove damaged components from site and replace.

3.3 INSTALLATION

A. Install wire rope trellis system in accordance with manufacturer's instructions and the approved shop drawings.

B. Provide anchorage devices and fittings to secure to in-place construction; including threaded fittings for concrete inserts, toggle bolts and through-bolts.

C. Install infill plumb, level, square, and rigid without kinks or sags.

D. Anchor trellis system to mounting surfaces as indicated on the Drawings.

E. Separate dissimilar materials with bushings, grommets or washers to prevent electrolytic corrosion.

F. Use manufacturer's supplied cable hardware.

G. Ensure cables are clean, parallel to each other, and without kinks or sags.

H. Tension cable with hand or hydraulic equipment so that no slack is visible.

I. After final adjustment provide tamper resistant Loctite materials on fittings.

3.4 ADJUSTING AND CLEANING

A. Adjust wire rope tension and connecting hardware.

B. Remove temporary coverings and protection of adjacent work areas. Clean installed products in accordance with manufacturer's instructions before ~~owner's~~ the City's acceptance.

C. Do not use abrasive cleaners.

D. Remove from project site and legally dispose of construction debris associated with this work.

3.5 PROTECTION

A. Protect installed products until completion of project.

B. Touch-up, repair or replace damaged products before Substantial Completion.

C. Protect installed products and finished surfaces from damage during construction.

D. Replace defective or damaged components as directed by Design Consultant.

END OF SECTION